Содержание

Tube Fittings

Pipe Fittings

Ball Valves

Hydraulic Ball Valves

5 Needle Valves

6 Instrumentation Manifolds

Check Valves

37° Flared Tube Fittings

Forged Fittings

Socket-Welding Type

ANSI Flanges

SAE Flanges (ISO6161, ISO6162)

Tube Fittings

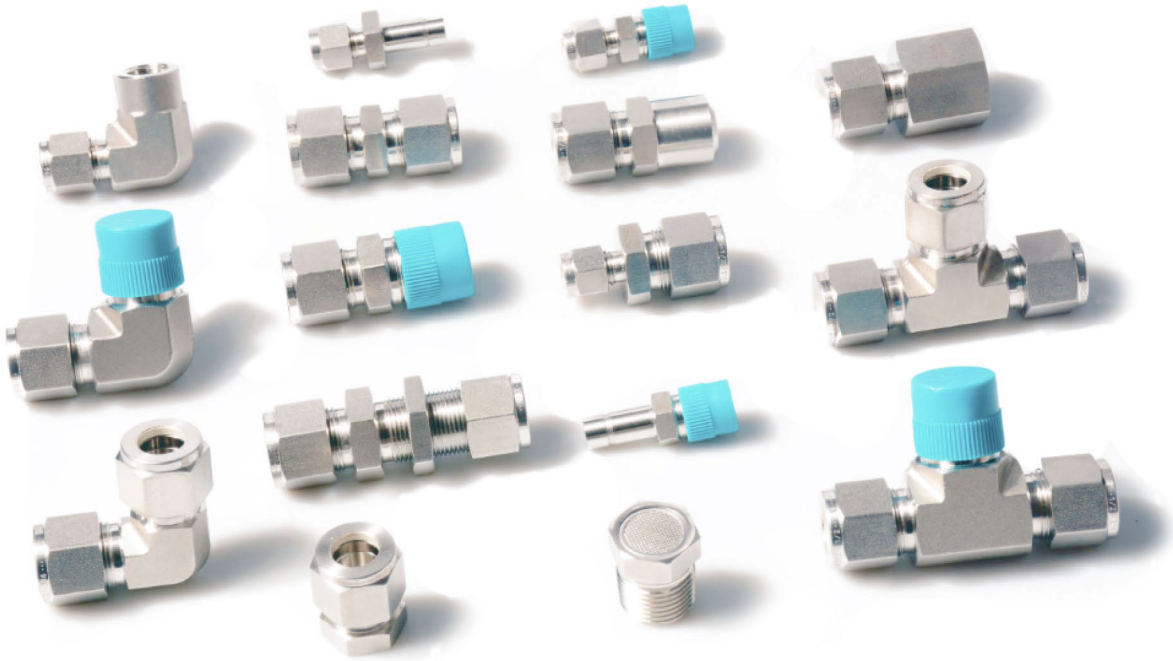

Contents

Installation Instructions

Tube Fittings Up to 1 in./25 mm

These instructions apply both to traditional fittings and to fittings with the advanced back-ferrule geometry.

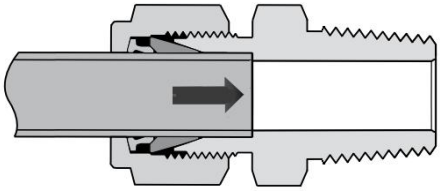 Fully insert the tube into the fitting and against the shoulder; rotate the nut finger-tight.	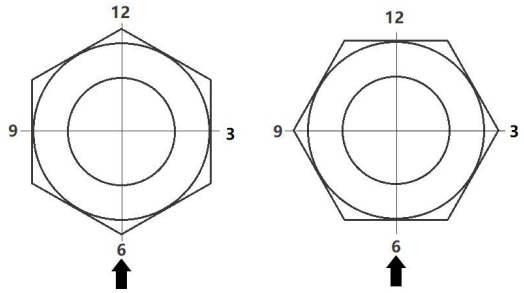 Mark the nut at the 6 o'clock position.
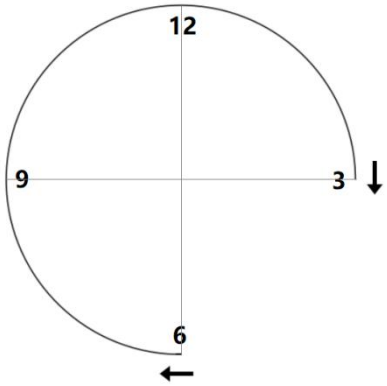 1/16, 1/8, and 3/16 in.; 2, 3, and 4 mm tube fittings, tighten the nut only three-quarters turn to the 3 o'clock position.	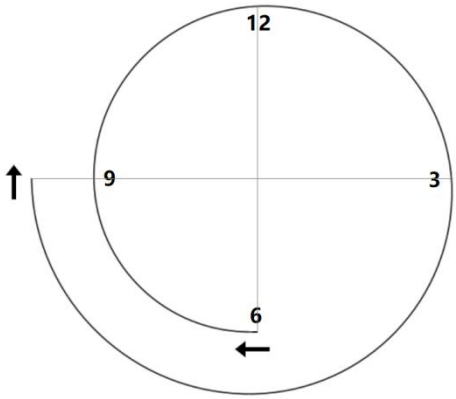 1/4 to 1 inch., and 6mm to 25 mm tube fittings, tighten the nut one and one-quarters turn to the 9 o'clock position.

Tube Fittings Over 1 in./25 mm

1. Preswage the ferrules onto the tube using the Multihead Hydraulic Swaging Unit (MHSU).
2. Apply the lubricant lightly to the body threads and the rear surface of the back ferrule.
3. Insert the tube with preswaged ferrules into the fitting until the front ferrule seats against the fitting body; rotate the nut finger-tight.
4. Mark the nut at the 6 o'clock position.
5. While holding the fitting body steady, tighten the nut one-half turn to the 12 o'clock position.

Reassembly-All Sizes

You may disassemble and reassemble tube fittings many times.Always depressurize the system before disassemblin.

Prior to disassembly, mark a line long the nut and fitting body flats.Use the marks to ensure that you return the nut to the previously pulled-up position.

Insert the tube with preswaged ferrules into the fitting until the front ferrule seats against the fitting body.

While holding the fitting body steady, rotate the nut with a wrench to the previously pulled-up position, as indicated by the marks on the tube and flats. At this point, you will feel a significant increase in resistance. Tighten the nut slightly.

Unions

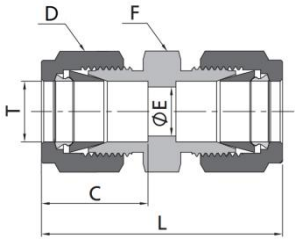

Fractional Tube

T-Tube O.D. (in.)	Basic Ordering Number	Dimension,in(mm)				
		L	C	D	F	E
1/16	-TU-FT1	0.99(25.1)	0.34(8.6)	0.31(7.9)	0.44(11.1)	0.05(1.3)
1/8	-TU-FT2	1.40(35.6)	0.50(12.7)	0.44(11.1)	0.44(11.1)	0.09(2.3)
3/16	-TU-FT3	1.47(37.3)	0.54(13.7)	0.50(12.7)	0.50(12.7)	0.12(3.0)
1/4	-TU-FT4	1.61(40.9)	0.60(15.2)	0.56(14.3)	0.50(12.7)	0.19(4.8)
5/16	-TU-FT5	1.69(42.9)	0.64(16.2)	0.63(15.9)	0.56(14.3)	0.25(6.4)
3/8	-TU-FT6	1.77(45.0)	0.66(16.8)	0.69(17.5)	0.63(15.9)	0.28(7.1)
1/2	-TU-FT8	2.02(51.3)	0.90(22.9)	0.87(22.2)	0.81(20.6)	0.41(10.4)
5/8	-TU-FT10	2.05(52.1)	0.96(24.4)	1.00(25.4)	0.94(23.9)	0.50(12.7)
3/4	-TU-FT12	2.11(53.6)	0.96(24.4)	1.13(28.6)	1.06(27.0)	0.62(15.7)
7/8	-TU-FT14	2.17(55.1)	1.02(25.9)	1.25(31.8)	1.37(34.9)	0.72(18.3)
1	-TU-FT16	2.55(64.8)	1.23(31.2)	1.5(38.1)	1.37(34.9)	0.88(22.4)
1 1/8	-TU-FT18	2.55(64.8)	1.23(31.2)	1.75(44.5)	1.63(41.3)	0.97(24.6)
1 1/4	-TU-FT20	3.63(92.2)	1.62(41.1)	1.87(47.6)	1.75(44.5)	1.09(27.7)
1 1/2	-TU-FT24	4.25(108.0)	1.97(50.0)	2.25(57.2)	2.13(54.0)	1.34(34.0)

Metric Tube

T-Tube O.D. (mm)	Basic Ordering Number	Dimension,mm(in.)				
		L	C	D	F	E
2	-TU-MT2	35.6(1.40)	12.9(0.51)	12.0(0.47)	12.0(0.47)	1.7(0.07)
3	-TU-MT3	35.3(1.39)	12.9(0.51)	12.0(0.47)	12.0(0.47)	2.4(0.09)
4	-TU-MT4	37.3(1.47)	13.7(0.54)	12.0(0.47)	12.0(0.47)	2.4(0.09)
6	-TU-MT6	41.0(1.61)	15.3(0.60)	14.0(0.55)	14.0(0.55)	4.8(0.19)
8	-TU-MT8	43.2(1.70)	16.2(0.64)	16.0(0.63)	15.0(0.59)	6.4(0.25)
10	-TU-MT10	46.2(1.82)	17.2(0.68)	19.0(0.75)	18.0(0.71)	7.9(0.31)
12	-TU-MT12	51.2(2.02)	22.8(0.90)	22.0(0.87)	22.0(0.87)	9.5(0.37)
14	-TU-MT14	52.0(2.05)	24.4(0.96)	25.0(0.98)	24.0(0.94)	11.1(0.44)
15	-TU-MT15	52.0(2.05)	24.4(0.96)	25.0(0.98)	24.0(0.94)	11.9(0.47)
16	-TU-MT16	52.0(2.05)	24.4(0.96)	25.0(0.98)	24.0(0.94)	12.7(0.50)
18	-TU-MT18	53.5(2.11)	24.4(0.96)	30.0(1.18)	27.0(1.06)	15.1(0.59)
20	-TU-MT20	55.0(2.17)	26.0(1.02)	32.0(1.26)	30.0(1.18)	15.9(0.63)
22	-TU-MT22	55.0(2.17)	26.0(1.02)	32.0(1.26)	30.0(1.18)	18.3(0.72)
25	-TU-MT25	65.0(2.56)	31.3(1.23)	38.0(1.50)	35.0(1.38)	21.8(0.86)
28	-TU-MT28	85.0(3.35)	36.6(1.44)	46.0(1.81)	41.0(1.61)	21.8(0.86)
30	-TU-MT30	92.7(3.65)	39.6(1.56)	50.0(1.97)	46.0(1.81)	26.2(1.03)
32	-TU-MT32	97.3(3.83)	42.0(1.65)	50.0(1.97)	46.0(1.81)	28.6(1.13)
38	-TU-MT38	113.6(4.47)	49.4(1.94)	60.0(2.36)	55.0(2.17)	33.7(1.33)

Convertion Unions

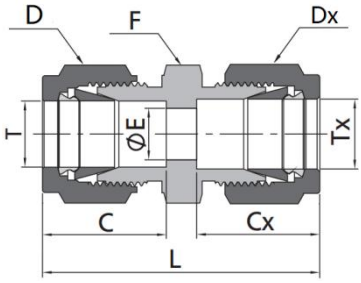

Metric Tube to Fractional Tube

T-Tube O.D. (mm)	Tx-Tube O.D. (in.)	Basic Ordering Number	Dimension,in(mm)						
			L	C	D	F	E	Cx	Dx
3	1/8	-CU-MT3-FT2	35.2(1.39)	12.9(0.51)	12.0(0.47)	12.0(0.47)	2.4(0.09)	12.7(0.50)	11.1(0.44)
4	1/8	-CU-MT4-FT2	36.5(1.44)	13.7(0.54)	12.0(0.47)	12.0(0.47)	2.4(0.09)	12.7(0.50)	11.1(0.44)
4	1/4	-CU-MT4-FT4	39.4(1.55)	13.7(0.54)	12.0(0.47)	14.0(0.55)	2.4(0.09)	15.2(0.60)	14.3(0.56)
6	1/8	-CU-MT6-FT2	38.5(1.52)	15.3(0.60)	14.0(0.55)	14.0(0.55)	2.4(0.09)	12.7(0.50)	11.1(0.44)
6	1/4	-CU-MT6-FT4	41.0(1.61)	15.3(0.60)	14.0(0.55)	14.0(0.55)	4.8(0.19)	15.2(0.60)	14.3(0.56)
6	5/16	-CU-MT6-FT5	42.3(1.67)	15.3(0.60)	14.0(0.55)	14.0(0.55)	4.8(0.19)	16.2(0.64)	15.9(0.63)
8	1/4	-CU-MT8-FT4	42.3(1.67)	16.2(0.64)	16.0(0.63)	15.0(0.59)	4.8(0.19)	15.2(0.60)	14.3(0.56)
8	3/8	-CU-MT8-FT6	44.3(1.74)	16.2(0.64)	16.0(0.63)	16.0(0.63)	6.4(0.25)	16.8(0.66)	17.5(0.69)
10	1/8	-CU-MT10-FT2	41.8(1.65)	17.2(0.68)	19.0(0.75)	18.0(0.71)	2.4(0.09)	12.7(0.50)	11.1(0.44)
10	1/4	-CU-MT10-FT4	44.5(1.75)	17.2(0.68)	19.0(0.75)	18.0(0.71)	4.8(0.19)	15.2(0.60)	14.3(0.56)
10	5/16	-CU-MT10-FT5	45.1(1.78)	17.2(0.68)	19.0(0.75)	18.0(0.71)	6.4(0.25)	16.2(0.64)	15.9(0.63)
10	3/8	-CU-MT10-FT6	45.9(1.81)	17.2(0.68)	19.0(0.75)	18.0(0.71)	7.1(0.28)	16.8(0.66)	17.5 0.69)
12	5/16	-CU-MT12-FT5	47.8(1.88)	22.8(0.90)	22.0(0.87)	22.0(0.87)	6.4(0.25)	16.2(0.64)	15.9(0.63)
12	3/8	-CU-MT12-FT6	48.4(1.91)	22.8(0.90)	22.0(0.87)	22.0(0.87)	7.1(0.28)	16.8(0.66)	17.5(0.69)
12	1/2	-CU-MT12-FT8	51.2(2.02)	22.8(0.90)	22.0(0.87)	22.0(0.87)	9.5(0.37)	22.9(0.90)	22.2(0.87)
15	1/2	-CU-MT15-FT8	52.0(2.05)	24.4(0.96)	25.0(0.98)	24.0(0.94)	10.4(0.41)	22.9(0.90)	22.2(0.87)
16	5/8	-CU-MT16-FT10	52.0(2.05)	24.4(0.96)	25.0(0.98)	24.0(0.94)	12.7(0.50)	24.4(0.96)	25.4(1.00)
18	3/4	-CU-MT18-FT12	53.5(2.11)	24.4(0.96)	30.0(1.18)	27.0(1.06)	15.1(0.59)	24.4(0.96)	28.6(1.13)
20	1/2	-CU-MT20-FT8	55.0(2.17)	26.0(1.02)	32.0(1.26)	30.0(1.18)	10.4(0.41)	22.9(0.90)	22.2(0.87)
20	1	-CU-MT20-FT16	62.8(2.47)	26.0(1.02)	32.0(1.26)	35.0(1.38)	15.9(0.63)	31.2(1.23)	38.1(1.50)
25	1	-CU-MT25-FT16	65.0(2.56)	31.3(1.23)	38.0(1.50)	35.0(1.38)	21.8(0.86)	31.2(1.23)	38.1(1.50)
28	1	-CU-MT28-FT16	79.6(3.13)	36.6(1.44)	46.0(1.81)	41.0(1.61)	21.8(0.86)	31.2(1.23)	38.1(1.50)
30	1	-CU-MT32-FT16	85.3(3.35)	39.6(1.56)	50.0(1.97)	46.0(1.81)	21.8(0.86)	31.2(1.23)	38.1(1.50)
32	1	-CU-MT32-FT16	86.5(3.40)	42.0(1.65)	50.0(1.97)	46.0(1.81)	21.8(0.86)	31.2(1.23)	38.1(1.50)
38	1	-CU-MT38-FT16	95.4(3.76)	49.4(1.94)	60.0(2.36)	55.0(2.17)	21.8(0.86)	31.2(1.23)	38.1(1.50)

Reducing Unions

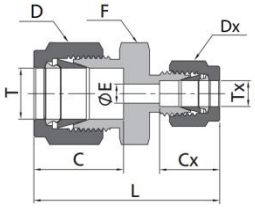

Fractional Tube

T-Tube O.D. (in.)	Tx-Tube O.D. (in.)	Basic Ordering Number	Dimension,in(mm)						
			L	C	D	F	E	Cx	Gx
1/8	1/16	-RU-FT2-FT1	1.22(31.0)	0.50(12.7)	0.44(11.1)	0.44(11.1)	0.05(1.3)	0.34(8.6)	0.31(7.9)
3/16	1/16	-RU-FT3-FT1	1.27(32.3)	0.54(13.7)	0.50(12.7)	0.44(11.1)	0.05(1.3)	0.34(8.6)	0.31(7.9)
3/16	1/8	-RU-FT3-FT2	1.44(36.6)	0.54(13.7)	0.50(12.7)	0.44(11.1)	0.09(2.3)	0.50(12.7)	0.44(11.1)
1/4	1/16	-RU-FT4-FT1	1.35(34.3)	0.60(15.2)	0.56(14.3)	0.50(12.7)	0.05(1.3)	0.34(8.6)	0.31(7.9)
1/4	1/8	-RU-FT4-FT2	1.52(38.6)	0.60(15.2)	0.56(14.3)	0.50(12.7)	0.09(2.3)	0.50(12.7)	0.44(11.1)
1/4	3/16	-RU-FT4-FT3	1.55(39.4)	0.60(15.2)	0.56(14.3)	0.50(12.7)	0.12(3.0)	0.54(13.7)	0.50(12.7)
5/16	1/8	-RU-FT5-FT2	1.56(39.6)	0.64(16.2)	0.63(15.9)	0.56(14.3)	0.09(2.3)	0.50(12.7)	0.44(11.1)
5/16	1/4	-RU-FT5-FT4	1.66(42.2)	0.64(16.2)	0.63(15.9)	0.56(14.3)	0.19(4.8)	0.60(15.2)	0.56(14.3)
3/8	1/16	-RU-FT6-FT1	1.44(36.6)	0.66(16.8)	0.69(17.5)	0.63(15.9)	0.05(1.3)	0.34(8.6)	0.31(7.9)
3/8	1/8	-RU-FT6-FT2	1.61(40.9)	0.66(16.8)	0.69(17.5)	0.63(15.9)	0.09(2.3)	0.50(12.7)	0.44(11.1)
3/8	1/4	-RU-FT6-FT4	1.70(43.2)	0.66(16.8)	0.69(17.5)	0.63(15.9)	0.19(4.8)	0.60(15.2)	0.56(14.3)
1/2	1/4	-RU-FT8-FT4	1.85(47.0)	0.90(22.8)	0.87(22.2)	0.81(20.6)	0.19(4.8)	0.60(15.2)	0.56(14.3)
1/2	3/8	-RU-FT8-FT6	1.91(48.5)	0.90(22.8)	0.87(22.2)	0.81(20.6)	0.28(7.1)	0.66(16.8)	0.69(17.5)
5/8	3/8	-RU-FT10-FT6	1.94(49.3)	0.96(24.4)	1.00(25.4)	0.94(23.9)	0.28(7.1)	0.66(16.8)	0.69(17.5)
5/8	1/2	-RU-FT10-FT8	2.05(52.1)	0.96(24.4)	1.00(25.4)	0.94(23.9)	0.41(10.4)	0.90(22.8)	0.87(22.2)
3/4	1/4	-RU-FT12-FT4	1.94(49.3)	0.96(24.4)	1.13(28.6)	1.06(27.0)	0.19(4.8)	0.60(15.2)	0.56(14.3)
3/4	3/8	-RU-FT12-FT6	2.00(50.8)	0.96(24.4)	1.13(28.6)	1.06(27.0)	0.28(7.1)	0.66(16.8)	0.69(17.5)
3/4	1/2	-RU-FT12-FT8	2.11(53.6)	0.96(24.4)	1.13(28.6)	1.06(27.0)	0.41(10.4)	0.90(22.8)	0.87(22.2)
1	1/2	-RU-FT16-FT8	2.38(60.5)	1.23(31.2)	1.50(38.1)	1.37(34.9)	0.41(10.4)	0.90(22.8)	0.87(22.2)
1	3/4	-RU-FT16-FT12	2.38(60.5)	1.23(31.2)	1.50(38.1)	1.37(34.9)	0.62(15.7)	0.96(24.4)	1.13(28.6)

Metric Tube

T-Tube O.D. (mm)	Tx-Tube O.D. (mm)	Basic Ordering Number	Dimension,mm(in.)						
			L	C	D	F	E	Cx	Gx
3	2	-RU-MT3-MT2	35.3(1.39)	12.9(0.51)	12.0(0.47)	12.0(0.47)	1.7(0.07)	12.9(0.51)	12.0(0.47)
6	3	-RU-MT6-MT3	38.6(1.52)	15.3(0.60)	14.0(0.55)	14.0(0.55)	2.4(0.09)	12.9(0.51)	12.0(0.47)
6	4	-RU-MT6-MT4	39.4(1.55)	15.3(0.60)	14.0(0.55)	14.0(0.55)	2.4(0.09)	13.7(0.54)	12.0(0.47)
8	6	-RU-MT8-MT6	42.3(1.67)	16.3(0.64)	16.0(0.63)	15.0(0.59)	4.8(0.19)	15.3(0.60)	14.0(0.55)
10	6	-RU-MT10-MT6	44.5(1.75)	17.2(0.68)	19.0(0.75)	18.0(0.71)	4.8(0.19)	15.3(0.60)	14.0(0.55)
10	8	-RU-MT10-MT8	45.1(1.78)	17.2(0.68)	19.0(0.75)	18.0(0.71)	6.4(0.25)	16.3(0.64)	16.0(0.63)
12	8	-RU-MT12-MT8	47.8(1.88)	22.8(0.90)	22.0(0.87)	22.0(0.87)	6.4(0.25)	16.3(0.64)	16.0(0.63)
12	10	-RU-MT12-MT10	48.7(1.92)	22.8(0.90)	22.0(0.87)	22.0(0.87)	7.9(0.31)	17.2(0.68)	19.0(0.75)
16	10	-RU-MT16-MT10	49.5(1.95)	24.4(0.96)	25.0(0.98)	24.0(0.94)	7.9(0.31)	17.2(0.68)	19.0(0.75)
16	12	-RU-MT16-MT12	52.0(2.05)	24.4(0.96)	25.0(0.98)	24.0(0.94)	9.5(0.37)	22.8(0.90)	22.0(0.87)
18	12	-RU-MT18-MT12	53.5(2.11)	24.4(0.96)	30.0(1.18)	27.0(1.06)	9.5(0.37)	22.8(0.90)	22.0(0.87)
25	18	-RU-MT25-MT18	61.0(2.40)	31.3(1.23)	38.0(1.50)	35.0(1.38)	15.1(0.59)	24.4(0.96)	30.0(1.18)
25	20	-RU-MT25-MT20	62.3(2.45)	31.3(1.23)	38.0(1.50)	35.0(1.38)	15.9(0.63)	26.0(1.02)	32.0(1.26)
30	20	-RU-MT30-MT20	75.4(2.97)	39.6(1.56)	50.0(1.97)	46.0(1.81)	15.9(0.63)	26.0(1.02)	32.0(1.26)
30	25	-RU-MT30-MT25	80.1(3.15)	39.6(1.56)	50.0(1.97)	46.0(1.81)	21.8(0.86)	31.3(1.23)	38.0(1.50)
32	20	-RU-MT32-MT20	77.8(3.06)	42.0(1.65)	50.0(1.97)	46.0(1.81)	15.9(0.63)	26.0(1.02)	32.0(1.26)
32	25	-RU-MT32-MT25	82.3(3.24)	42.0(1.65)	50.0(1.97)	46.0(1.81)	21.8(0.86)	31.3(1.23)	38.0(1.50)
38	25	-RU-MT38-MT25	92.0(3.62)	49.4(1.94)	60.0(2.36)	55.0(2.17)	21.8(0.86)	31.3(1.23)	38.0(1.50)
38	30	-RU-MT38-MT30	104.6(4.12)	49.4(1.94)	60.0(2.36)	55.0(2.17)	26.2(1.03)	39.6(1.56)	50.0(1.97)

Male Connector

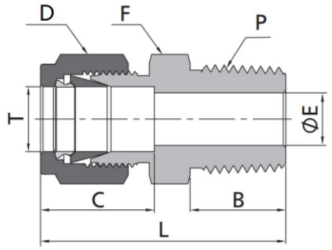

Fractional Tube to NPT Thread

T-Tube O.D. (in.)	P-NPT Size	Basic Ordering Number	Dimension, in. (mm)					
			L	B	C	E	D	F
1/16	1/16	-MC-FT1-MN1	0.94(23.9)	0.38(9.7)	034(8.6)	0.05(1.3)	0.31(7.9)	0.31(7.9)
1/16	1/8	-MC-FT1-MN2	1.03(26.2)	0.38(9.7)	0.34(8.6)	0.05(1.3)	0.31(7.9)	0.44(11.1)
1/8	1/16	-MC-FT2-MN1	1.17(29.7)	0.38(9.7)	0.50(12.7)	0.09(2.3)	0.44(11.1)	0.44(11.1)
1/8	1/8	-MC-FT2-MN2	1.20(30.5)	0.38(9.7)	0.50(12.7)	0.09(2.3)	0.44(11.1)	0.44(11.1)
1/8	1/4	-MC-FT2-MN4	1.40(35.6)	0.56(14.2)	0.50(12.7)	0.09(2.3)	0.44(11.1)	0.56(14.3)
3/16	1/8	-MC-FT3-MN2	1.23(31.2)	0.38(9.7)	0.54(13.7)	0.12(3.0)	0.50(12.7)	0.44(11.1)
3/16	1/4	-MC-FT3-MN4	1.43(36.3)	0.56(14.2)	0.54(13.7)	0.12(3.0)	0.50(12.7)	0.56(14.3)
1/4	1/16	-MC-FT4-MN1	1.29(32.8)	0.38(9.7)	0.60(15.2)	0.12(3.0)	0.56(14.3)	0.50(12.7)
1/4	1/8	-MC-FT4-MN2	1.29(32.8)	0.38(9.7)	0.60(15.2)	0.19(4.8)	0.56(14.3)	0.50(12.7)
1/4	1/4	-MC-FT4-MN4	1.49(37.8)	0.56(14.2)	0.60(15.2)	0.19(4.8)	0.56(14.3)	0.56(14.3)
1/4	3/8	-MC-FT4-MN6	1.51(38.4)	0.56(14.2)	0.60(15.2)	0.19(4.8)	0.56(14.3)	0.69(17.5)
5/16	1/8	-MC-FT5-MN2	1.34(34.0)	0.38(9.7)	0.64(16.3)	0.19(4.8)	0.63(15.9)	0.56(14.3)
5/16	1/4	-MC-FT5-MN4	1.52(38.6)	0.38(9.7)	0.64(163)	0.25(6.4)	0.63(15.9)	0.56(14.3)
5/16	3/8	-MC-FT5-MN6	1.54(39.1)	0.56(14.2)	0.64(16.3)	0.25(6.4)	0.63(15.9)	0.69(17.5)
5/16	1/2	-MC-FT5-MN8	1.79(45.5)	0.75(19.1)	0.64(16.3)	0.25(6.4)	0.63(15.9)	0.87(22.2)
3/8	1/8	-MC-FT6-MN2	1.39(35.3)	0.38(9.7)	0.66(16.8)	0.19(4.8)	0.69(17.5)	0.63(15.9)
3/8	1/4	-MC-FT6-MN4	1.57(39.9)	0.56(14.2)	0.66(16.8)	0.28(7.1)	0.69(17.5)	0.63(15.9)
3/8	3/8	-MC-FT6-MN6	1.57(39.9)	0.56(14.2)	0.66(16.8)	0.28(7.1)	0.69(17.5)	0.69(17.5)
3/8	1/2	-MC-FT6-MN8	1.82(46.2)	0.75(19.1)	0.66(16.8)	0.28(7.1)	0.69(17.5)	0.87(22.2)
1/2	1/8	-MC-FT8-MN2	1.53(38.9)	0.38(9.7)	0.90(22.9)	0.19(4.8)	0.87(22.2)	0.81(20.6)
1/2	1/4	-MC-FT8-MN4	1.71(43.4)	0.56(14.2)	0.90(22.9)	0.28(7.1)	0.87(22.2)	0.81(20.6)
1/2	3/8	-MC-FT8-MN6	1.71(43.4)	0.56(14.2)	0.90(22.9)	0.38(9.7)	0.87(22.2)	0.81(20.6)
1/2	1/2	-MC-FT8-MN8	1.93(49.0)	0.75(19.1)	0.90(22.9)	0.41(10.4)	0.87(22.2)	0.87(22.2)
1/2	3/4	-MC-FT8-MN12	1.99(50.5)	0.75(19.1)	0.90(22.9)	0.41(10.4)	0.87(22.2)	1.06(27.0)
1/2	1	-MC-FT8-MN16	2.25(57.2)	0.94(23.9)	0.90(22.9)	0.41(10.4)	0.87(22.2)	1.37(34.9)
5/8	1/4	-MC-FT10-MN4	1.74(44.2)	0.56(14.2)	0.96(24.4)	0.28(7.1)	1.00(25.4)	0.94(23.8)
5/8	3/8	-MC-FT10-MN6	1.74(44.2)	0.56(14.2)	0.96(24.4)	0.38(9.7)	1.00(25.4)	0.94(23.8)
5/8	1/2	-MC-FT10-MN8	1.93(49.0)	0.75(19.1)	0.96(24.4)	0.47(11.9)	1.00(25.4)	0.94(23.8)
5/8	3/4	-MC-FT10-MN12	1.99(50.5)	0.75(19.1)	0.96 (24.4)	0.50(12.7)	1.00(25.4)	1.06(27.0)
3/4	3/8	-MC-FT12-MN6	1.99(50.5)	0.56(14.2)	0.96(24.4)	0.41(10.4)	1.13(28.6)	1.06(27.0)
3/4	1/2	-MC-FT12-MN8	2.25(57.2)	0.75(19.1)	0.96(24.4)	0.47(11.9)	1.13(28.6)	1.06(27.0)
3/4	3/4	-MC-FT12-MN12	1.99(50.5)	0.75(19.1)	0.96(24.4)	0.62(15.7)	1.13(28.6)	1.06(27.0)
3/4	1	-MC-FT12-MN16	2.25(57.2)	0.94(23.9)	0.96(24.4)	0.62(15.7)	1.13(28.6)	1.37(34.9)
7/8	1/2	-MC-FT14-MN8	2.26(57.4)	0.75(19.1)	1.02(25.9)	0.47(11.9)	1.25(31.8)	1.19(30.2)
7/8	3/4	-MC-FT14-MN12	2.45(62.2)	0.75(19.1)	1.02(25.9)	0.62(15.7)	1.25(31.8)	1.19(30.2)
7/8	1	-MC-FT14-MN16	2.45(62.2)	0.94(23.9)	1.02(25.9)	0.72(18.3)	1.25(31.8)	1.37(34.9)
1	1/2	-MC-FT16-MN8	3.04(77.2)	0.75(19.1)	1.23(31.2)	0.47(11.9)	1.50(38.1)	1.37(34.9)
1	3/4	-MC-FT16-MN12	3.04(77.2)	0.75(19.1)	1.23(31.2)	0.62(15.7)	1.50(38.1)	1.37(34.9)
1	1	-MC-FT16-MN16	3.50(88.9)	0.94(23.9)	1.23(31.2)	0.88(22.4)	1.50(38.1)	1.37(34.9)
1 1/8	1	-MC-FT18-MN16	2.45(62.2)	0.94(23.9)	1.23(31.2)	0.88(22.4)	1.81(46.0)	1.63(41.3)
1 1/4	1	-MC-FT20-MN16	3.04(77.2)	0.94(23.9)	1.62(41.1)	0.88(22.4)	1.87(47.6)	1.75(44.5)
1 1/4	1 1/4	-MC-FT20-MN20	3.04(77.2)	0.94(23.9)	1.62(41.1)	1.09(27.7)	1.87(47.6)	1.75(44.5)
1 1/2	1 1/2	-MC-FT24-MN24	3.50(88.9)	1.03(26.2)	1.97(50.0)	134(34.0)	2.25(57.2)	2.13(54.0)

Male Connector

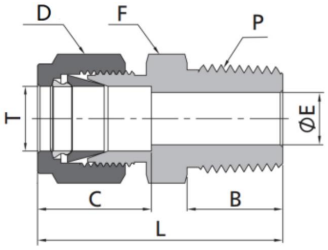

Fractional Tube to RT Thread

T-Tube O.D. (in.)	P-RT Size	Basic Ordering Number	Dimension, in. (mm)					
			L	B	C	E	D	F
1/8	1/8	-MC-FT2-RT2	1.20(30.5)	0.38(9.7)	0.50(12.7)	0.09(2.3)	0.44(11.1)	0.44(11.1)
1/8	1/4	-MC-FT2-RT4	1.40(35.6)	0.56(14.2)	0.50(12.7)	0.09(2.3)	0.44(11.1)	0.56(14.3)
1/4	1/8	-MC-FT4-RT2	1.29(32.8)	0.38(9.7)	0.60(15.2)	0.19(4.8)	0.56(14.3)	0.50(12.7)
1/4	1/4	-MC-FT4-RT4	1.49(37.8)	0.56(14.2)	0.60(15.2)	0.19(4.8)	0.56(14.3)	0.56(14.3)
1/4	3/8	-MC-FT4-RT6	1.51(38.4)	0.56(14.2)	0.60(15.2)	0.19(4.8)	0.56(14.3)	0.69(17.5)
1/4	1/2	-MC-FT4-RT8	1.76(44.7)	0.75(19.1)	0.60(15.2)	0.19(4.8)	0.56(14.3)	0.87(22.2)
5/16	1/8	-MC-FT5-RT2	1.34(34.0)	0.38(9.7)	0.64(16.3)	0.19(4.8)	0.63(15.9)	0.56(14.3)
5/16	1/4	-MC-FT5-RT4	1.52(38.6)	0.56(14.2)	0.64(16.3)	0.25(6.4)	0.63(15.9)	0.56(14.3)
3/8	1/8	-MC-FT6-RT2	1.39(353)	0.38(9.7)	0.66(16.8)	0.19(4.8)	0.69(17.5)	0.63(15.9)
3/8	1/4	-MC-FT6-RT4	1.57(39.9)	0.56(14.2)	0.66(16.8)	0.28(7.1)	0.69(17.5)	0.63(15.9)
3/8	3/8	-MC-FT6-RT6	1.57(39.9)	0.56(14.2)	0.66(16.8)	0.28(7.1)	0.69(17.5)	0.69(17.5)
3/8	1/2	-MC-FT6-RT8 -	1.82(46.2)	0.75(19.1)	0.66(16.8)	0.28(7.1)	0.69(17.5)	0.87(22.2)
3/8	3/4	-MC-FT6-RT12	1.88(47.8)	0.75(19.1)	0.66(16.8)	0.28(7.1)	0.69(17.5)	1.06(27.0)
1/2	1/4	-MC-FT3-RT4	1.71(43.4)	0.56(14.2)	0.90(22.9)	0.28(7.1)	0.87(22.2)	0.81(20.6)
1/2	3/8	-MC-FT3-RT6	1.71(43.4)	0.56(14.2)	0.90(22.9)	0.38(9.7)	0.87(22.2)	0.81(20.6)
1/2	1/2	-MC-FT3-RT8	1.93(49.0)	0.75(19.1)	0.90(22.9)	0.41(10.4)	0.87(22.2)	0.87(22.2)
1/2	3/4	-MC-FT3-RT12	1.99(50.5)	0.75(19.1)	0.90(22.9)	0.41(10.4)	0.87(22.2)	1.06(27.0)
5/8	1/2	-MC-FT10-RT8	1.93(49.0)	0.75(19.1)	0.96(24.4)	0.47(11.9)	1.00(25.4)	0.94(23.8)
3/4	3/4	-MC-FT12-RT12	1.99(50.5)	0.75(19.1)	0.96(24.4)	0.62(15.7)	1.13(28.6)	1.06(27.0)
3/4	1	-MC-FT12-RT16	2.25(57.2)	0.94(23.9)	0.96(24.4)	0.62(15.7)	1.13(28.6)	1.37(34.9)
1	3/4	-MC-FT16-RT12	2.26(57.4)	0.75(19.1)	1.23(31.2)	0.62(15.7)	1.50(38.1)	1.37(34.9)
1	1	-MC-FT16-RT16	2.45(62.2)	0.94(23.9)	1.23(31.2)	0.88(22.4)	1.50(38.1)	1.37(34.9)
1 1/8	1	-MC-FT18-RT16	2.45(62.2)	0.94(23.9)	1.23(31.2)	0.88(22.4)	1.81(46.0)	1.63(41.3)
1 1/4	1	-MC-FT20-RT16	3.04(77.2)	0.94(23.9)	1.62(41.1)	0.88(22.4)	1.87(47.6)	1.75(44.5)
1 1/4	1 1/4	-MC-FT20-RT20	3.04(77.2)	0.94(23.9)	1.62(41.1)	1.09(27.7)	1.87(47.6)	1.75(44.5)
1 1/2	1 1/2	-MC-FT24-RT24	3.50(88.9)	1.03(26.2)	1.97(50.0)	134(34.0)	2.25(57.2)	2.13(54.0)

Male Connector

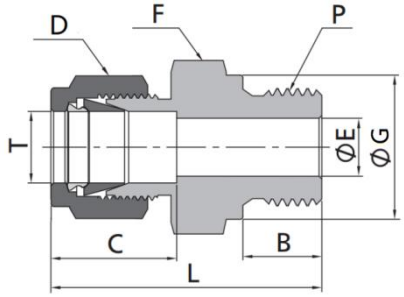

Fractional Tube to ISO Parallel Thread

T-Tube O.D. (in.)	P-RS Size	Basic Ordering Number	Dimension, in. (mm)						
			L	B	C	E	D	F	G
1/8	1/8	-MC-FT2-RS2	1.18(30.0)	0.28(7.1)	0.50(12.7)	0.09(2.3)	0.44(11.1)	0.56(14.3)	0.54(13.7)
1/8	1/4	-MC-FT2-RS4	1.39(35.3)	0.44(11.2)	0.50(12.7)	0.09(2.3)	0.44(11.1)	0.75(19.1)	0.71(18.0)
1/8	3/8	-MC-FT2-RS6	1.43(36.3)	0.44(11.2)	0.50(12.7)	0.09(2.3)	0.44(11.1)	0.87(22.2)	0.86(21.8)
1/4	1/8	-MC-FT4-RS2	1.27(32.3)	0.28(7.1)	0.60(15.2)	0.16(4.0)	0.56(14.3)	0.56(14.3)	0.54(13.7)
1/4	1/4	-MC-FT4-RS4	1.48(37.6)	0.44(11.2)	0.60(15.2)	0.19(4.8)	0.56(14.3)	0.75(19.1)	0.71(18.0)
1/4	3/8	-MC-FT4-RS6	1.53(38.9)	0.44(11.2)	0.60(15.2)	0.19(4.8)	0.56(14.3)	0.87(22.2)	0.86(21.8)
1/4	1/2	-MC-FT4-RS8	1.76(44.7)	0.56(14.2)	0.60(15.2)	0.19(4.8)	0.56(14.3)	1.06(27.0)	1.02(25.9)
3/8	1/8	-MC-FT6-RS2	1.49(37.8)	0.28(7.1)	0.66(16.8)	0.16(4.0)	0.69(17.5)	0.63(15.9)	0.54(13.7)
3/8	1/4	-MC-FT6-RS4	1.54(39.1)	0.44(11.2)	0.66(16.8)	0.23(5.9)	0.69(17.5)	0.75(19.1)	0.71(18.0)
3/8	3/8	-MC-FT6-RS6	1.59(40.4)	0.44(11.2)	0.66(16.8)	0.28(7.1)	0.69(17.5)	0.87(22.2)	0.86(21.8)
3/8	1/2	-MC-FT6-RS8	1.82(46.2)	0.56(14.2)	0.66(16.8)	0.28(7.1)	0.69(17.5)	1.06(27.0)	1.02(25.9)
1/2	1/4	-MC-FT8-RS4	1.68(42.7)	0.44(11.2)	0.90(22.9)	0.23(5.9)	0.87(22.2)	0.81(20.6)	0.71(18.0)
1/2	3/8	-MC-FT8-RS6	1.70(43.2)	0.44(11.2)	0.90(22.9)	0.31(7.9)	0.87(22.2)	0.87(22.2)	0.86(21.8)
1/2	1/2	-MC-FT8-RS8	1.93(49.0)	0.56(14.2)	0.90(22.9)	0.41(10.4)	0.87(22.2)	1.06(27.0)	1.02(25.9)
3/4	1/2	-MC-FT12-RS8	1.93(49.0)	0.56(14.2)	0.96(24.4)	0.47(11.9)	1.13(28.6)	1.06(27.0)	1.02(25.9)
3/4	3/4	-MC-FT12-RS12	2.08(52.9)	0.62(15.7)	0.96(24.4)	0.62(15.7)	1.13(28.6)	1.31(33.3)	1.26(32.0)
1	1/2	-MC-FT16-RS8	2.19(55.5)	0.56(14.2)	1.23(31.2)	0.47(11.9)	1.50(38.1)	1.37(34.9)	1.02(25.9)
1	3/4	-MC-FT16-RS12	2.27(57.7)	0.62(15.7)	1.23(31.2)	0.63(16.0)	1.50(38.1)	1.37(34.9)	1.26(32.0)
1	1	-MC-FT16-RS16	2.36(59.9)	0.72(18.3)	1.23(31.2)	0.78(19.8)	1.50(38.1)	1.63(41.3)	1.54(39.1)

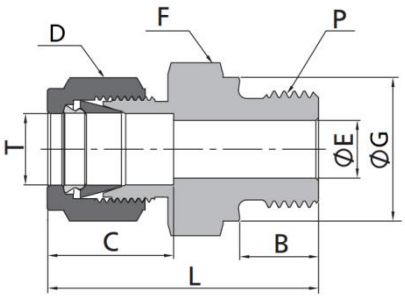

Fractional Tube to ISO Parallel Thread

T-Tube O.D. (in.)	P-RP Size	Basic Ordering Number	Dimension, in. (mm)						
			L	B	C	E	D	F	G
1/8	1/8	-MC-FT2-RP2	1.18(30.0)	0.28(7.1)	0.50(12.7)	0.09(2.3)	0.44(11.1)	0.56(14.3)	0.54(13.8)
1/8	1/4	-MC-FT2-RP4	1.39(35.3)	0.44(11.2)	0.50(12.7)	0.09(2.3)	0.44(11.1)	0.75(19.1)	0.70(17.8)
1/4	1/8	-MC-FT4-RP2	1.27(32.3)	0.28(7.1)	0.60(15.2)	0.16(4.1)	0.56(14.3)	0.56(14.3)	0.54(13.8)
1/4	1/4	-MC-FT4-RP4	1.48(37.6)	0.44(11.2)	0.60(15.2)	0.19(4.8)	0.56(14.3)	0.75(19.1)	0.70(17.8)
1/2	3/8	-MC-FT8-RP6	1.59(40.4)	0.44(11.2)	0.90(22.9)	0.31(7.9)	0.87(22.2)	0.87(22.2)	0.86(21.8)
1/2	1/2	-MC-FT8-RP8	1.93(49.0)	0.56(14.2)	0.90(22.9)	0.41(10.4)	0.87(22.2)	1.06(27.0)	1.02(25.9)
3/4	1/2	-MC-FT12-RP8	1.93(49.0)	0.56(14.2)	0.96(24.4)	0.47(11.9)	1.13(28.6)	1.06(27.0)	1.02(25.9)
3/4	3/4	-MC-FT12-RP12	2.08(52.9)	0.62(15.7)	0.96(24.4)	0.62(15.7)	1.13(28.6)	1.31(33.3)	1.26(32.0)
1	1	-MC-FT16-RP16	2.36(59.9)	0.72(18.3)	1.23(31.2)	0.78(19.8)	1.50(38.1)	1.63(41.3)	1.53(38.8)

Male Connector

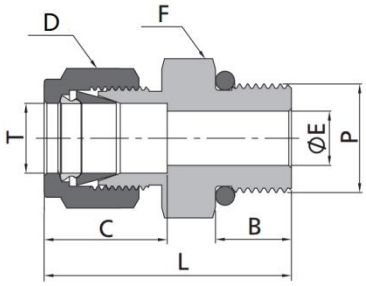

Fractional Tube to SAE/MS Thread

T-Tube O.D. (in.)	P-SAE/MS Size	Basic Ordering Number	Dimension, in. (mm)					
			L	B	C	E	D	F
1/16	5/16-24	-MC-FT1-ST5	0.92(23.4)	030(7.6)	0.34(8.6)	0.05(1.3)	0.31 (7.9)	0.44(11.1)
1/8	5/16-24	-MC-FT2-ST5	1.18(30.0)	030(7.6)	0.50(12.7)	0.09(2.3)	0.44(11.1)	0.44(11.1)
1/8	7/16-20	-MC-FT2-ST7	1.24(31.5)	036(9.1)	0.50(12.7)	0.09(2.3)	0.44(11.1)	0.56(14.3)
1/8	9/16-18	-MC-FT2-ST9	1.31(333)	039(9.9)	0.50(12.7)	0.09(2.3)	0.44(11.1)	0.69(17.5)
3/16	3/8-24	-MC-FT3-ST6	1.20(30.5)	030(7.6)	0.54(13.7)	0.12(3.0)	0.50(12.7)	0.50(12.7)
1/4	5/16-24	-MC-FT4-ST5	1.27(323)	030(7.6)	0.60(15.2)	0.09(2.3)	0.56(14.3)	0.50(12.7)
1/4	7/16-20	-MC-FT4-ST7	1.34(34.0)	036(9.1)	0.60(15.2)	0.19(4.8)	0.56(14.3)	0.56(14.3)
1/4	9/16-18	-MC-FT4-ST9	1.40(35.6)	039(9.9)	0.60(15.2)	0.19(4.8)	0.56(14.3)	0.69(17.5)
1/4	3/4-16	-MC-FT4-ST12	1.48(37.6)	0.44(11.2)	0.60(15.2)	0.19(4.8)	0.56(14.3)	0.87(22.2)
1/4	7/8-14	-MC-FT4-ST14	1.60(40.6)	0.50(12.7)	0.60(15.2)	0.19(4.8)	0.56(14.3)	1.00(25.4)
5/16	1/2-20	-MC-FT5-ST8	137(34.8)	036(9.1)	0.64(163)	0.25(6.4)	0.63(15.9)	0.63(15.9)
3/8	7/16-20	-MC-FT6-ST7	1.40(35.6)	0.36(9.1)	0.66(16.8)	0.20(5.1)	0.69(17.5)	0.63(15.9)
3/8	9/16-18	-MC-FT6-ST9	1.46(37.1)	039(9.9)	0.66(16.8)	0.28(7.1)	0.69(17.5)	0.69(17.5)
3/8	3/4-16	-MC-FT6-ST12	1.54(39.1)	0.44(11.2)	0.66(16.8)	0.28(7.1)	0.69(17.5)	0.87(22.2)
3/8	7/8-14	-MC-FT6-ST14	1.66(42.2)	0.50(12.7)	0.66(16.8)	0.28(7.1)	0.69(17.5)	1.00(25.4)
1/2	9/16-18	-MC-FT8-ST9	1.54(39.1)	039(9.9)	0.90(22.9)	0.28(7.1)	0.87(22.2)	0.81 (20.6)
1/2	3/4-16	-MC-FT8-ST12	1.65(41.9)	0.44(11.2)	0.90(22.9)	0.41(10.4)	0.87(22.2)	0.87(22.2)
1/2	7/8-14	-MC-FT8-ST14	1.77(45.0)	0.50(12.7)	0.90(22.9)	0.41(10.4)	0.87(22.2)	1.00(25.4)
1/2	1 1/16-12	-MC-FT8-ST17	1.93(49.0)	0.59(15.0)	0.90(22.9)	0.41(10.4)	0.87(22.2)	1.25(31.8)
5/8	3/4-16	-MC-FT10-ST12	1.65(41.9)	0.44(11.2)	0.96(24.4)	0.42(10.7)	1.00(25.4)	0.94(23.8)
5/8	7/8-14	-MC-FT10-ST14	1.78(45.2)	0.50(12.7)	0.96(24.4)	0.50(12.7)	1.00(25.4)	1.00(25.4)
3/4	3/4-16	-MC-FT12-ST12	1.81(46.0)	0.44(11.2)	0.96(24.4)	0.42(10.7)	1.13(28.6)	1.06(27.0)
3/4	1 1/16-12	-MC-FT12-ST17	1.93(49.0)	0.59(15.0)	0.96(24.4)	0.62(15.7)	1.13(28.6)	1.25(31.8)
3/4	1 5/16-12	-MC-FT12-ST21	1.96(49.8)	0.59(15.0)	0.96(24.4)	0.63(16.0)	1.13(28.6)	1.50(38.1)
7/8	1 3/16-12	-MC-FT14-ST19	1.93(49.0)	0.59(15.0)	1.02(25.9)	0.72(18.3)	1.25(31.8)	1.37(34.9)
1	1 1/16-12	-MC-FT16-ST17	2.10(533)	0.59(15.0)	1.23(31.2)	0.54(13.8)	1.50(38.1)	1.37(34.9)
1	1 5/16-12	-MC-FT16-ST21	2.14(54.4)	0.59(15.0)	1.23(31.2)	0.88(22.4)	1.50(38.1)	1.50(38.1)
1 1/4	1 5/8-12	-MC-FT20-ST26	2.69(683)	0.59(15.0)	1.62 (4).1)	1.09(27.7)	1.87(47.6)	1.87(47.6)
1 1/2	1 7/8-12	-MC-FT24-ST30	3.06(77.7)	0.59(15.0)	1.97(50.0)	1.34(34.0)	2.25(57.2)	2.13(54.0)

Male Connector

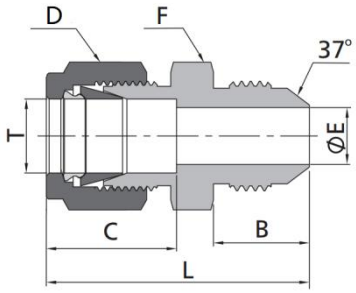

Fractional Tube to 37° Flared

T-Tube O.D. (in.)	Flared Size	Basic Ordering Number	Dimension, in. (mm)					
			L	B	C	E	D	F
1/16	1/8	-MC-FT1-AN2	1.07(27.2)	0.45(11.4)	0.34(8.6)	0.05(1.3)	0.31(7.9)	0.44(11.1)
1/8	1/8	-MC-FT2-AN2	1.27(32.3)	0.45(11.4)	0.50(12.7)	0.06(1.5)	0.44(11.1)	0.44(11.1)
1/8	1/4	-MC-FT2-AN4	138(35.1)	0.55(14.0)	0.50(12.7)	0.09(2.3)	0.44(11.1)	0.50(12.7)
3/16	3/16	-MC-FT3-AN3	132(33.5)	0.48(12.2)	0.54(13.7)	0.09(2.3)	0.50(12.7)	0.44(11.1)
1/4	1/4	-MC-FT4-AN4	1.48(37.6)	0.55(14.0)	0.60(15.2)	0.17(4.3)	0.56(14.3)	0.50(12.7)
5/16	5/16	-MC-FT5-AN5	1.51(38.4)	0.55(14.0)	0.64(16.2)	0.23(5.8)	0.63(15.9)	0.56(14.3)
3/8	1/4	-MC-FT6-AN4	1.56(39.6)	0.55(14.0)	0.66(16.8)	0.17(4.3)	0.69(17.5)	0.63(15.9)
3/8	3/8	-MC-FT6-AN6	1.56(39.6)	0.56(14.1)	0.66(16.8)	0.28(7.1)	0.69(17.5)	0.63(15.9)
1/2	1/2	-MC-FT8-AN8	1.81(46.0)	0.66(16.7)	0.90(22.8)	039(9.9)	0.87(22.2)	0.81(20.6)
5/8	5/8	-MC-FT10-AN10	1.93(49.0)	0.76(193)	0.96(24.5)	0.48(12.3)	1.00(25.4)	0.94(23.8)
3/4	3/4	-MC-FT12-AN12	2.10(53.3)	0.86(21.9)	0.96(24.4)	0.61(15.5)	1.13(28.6)	1.13(28.6)
1	1	-MC-FT16-AN16	2.42(61.5)	0.91(23.1)	1.23(31.2)	0.84(213)	1.50(38.1)	137(34.9)

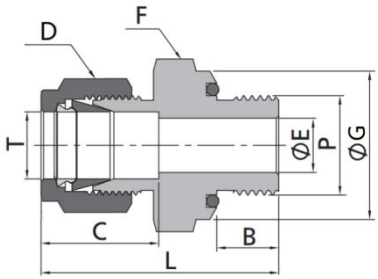

Fractional Tube to SAE/MS Thread

T-Tube O.D. (in.)	P-SAE/MS Size	Basic Ordering Number	Dimension, in. (mm)						
			L	B	C	E	D	F	G
1/16	5/16-24	-MC-FT1-OS5	1.05(26.7)	0.34(8.6)	0.34(8.6)	0.05(1.3)	0.31(7.9)	0.56(14.3)	0.55(14.0)
1/8	5/16-24	-MC-FT2-OS5	1.29(32.8)	0.34(8.6)	0.50(12.7)	0.09(2.3)	0.44(11.1)	0.56(14.3)	0.55(14.0)
3/16	3/8-24	-MC-FT3-OS6	1.35(34.3)	0.38(9.7)	0.54(13.7)	0.12(3.0)	0.50(12.7)	0.63(15.9)	0.62(15.7)
1/4	7/16-20	-MC-FT4-OS7	1.51(38.4)	0.41(10.4)	0.60(15.2)	0.19(4.8)	0.56(14.3)	0.75(19.1)	0.74(18.8)
5/16	1/2-20	-MC-FT5-OS8	1.60(40.6)	0.44(11.2)	0.64(16.3)	0.25(6.4)	0.63(15.9)	0.87(22.2)	0.86(21.8)
3/8	9/16-18	-MC-FT6-OS9	1.67(42.4)	0.47(11.9)	0.66(16.8)	0.28(7.1)	0.69(17.5)	0.94(23.8)	0.93(23.6)
1/2	3/4-16	-MC-FT8-OS12	1.81(46.0)	0.47(11.9)	0.90(22.9)	0.41(10.4)	0.87(22.2)	1.13(28.6)	1.12(28.4)
3/4	1 1/16-12	-MC-FT12-OS17	2.06(52.3)	0.56(14.2)	0.96(24.4)	0.62(15.7)	1.13(28.6)	1.50(38.1)	1.49(37.8)
1	1 5/16-12	-MC-FT16-OS21	2.29(58.2)	0.56(14.2)	1.23(31.2)	0.88(22.4)	1.50(38.1)	1.75(44.5)	1.74(44.2)

Male Connector

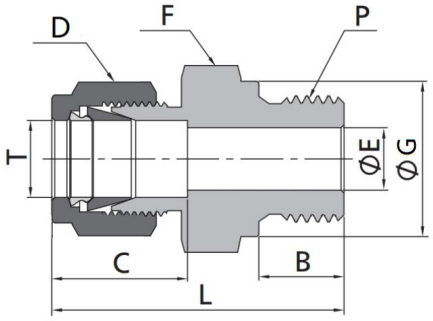

Fractional Tube to Metric Thread

T-Tube O.D. (in.)	P-Metric Size	Basic Ordering Number	Dimension, in. (mm)						
			L	B	C	E	D	F	G
1/8	M14x 1.5	-MC-FT2-MS14	1.44(36.7)	0.47(12.0)	0.50(12.7)	0.09(2.3)	0.44(11.1)	0.75(19.1)	0.75(19.0)
1/8	M16x 1.5	-MC-FT2-MS16	1.48(37.5)	0.47(12.0)	0.50(12.7)	0.09(2.3)	0.44(11.1)	0.87(22.2)	0.83(21.0)
1/8	M18x 1.5	-MC-FT2-MS18	1.52(38.5)	0.47(12.0)	0.50(12.7)	0.09(2.3)	0.44(11.1)	0.94(23.8)	0.91(23.0)
1/8	M20x 1.5	-MC-FT2-MS20	1.62(41.1)	0.55(14.0)	0.50(12.7)	0.09(2.3)	0.44(11.1)	1.00(25.4)	0.98(25.0)
1/4	M14x 1.5	-MC-FT4-MS14	1.50(38.0)	0.47(12.0)	0.60(15.2)	0.19(4.8)	0.56(14.3)	0.75(19.1)	0.75(19.0)
1/4	M16x 1.5	-MC-FT4-MS16	1.57(39.9)	0.47(12.0)	0.60(15.2)	0.19(4.8)	0.56(14.3)	0.87(22.2)	0.83(21.0)
1/4	M18x 1.5	-MC-FT4-MS18	1.61(40.8)	0.47(12.0)	0.60(15.2)	0.19(4.8)	0.56(14.3)	0.94(23.8)	0.91(23.0)
1/4	M20x 1.5	-MC-FT4-MS20	1.72(43.6)	0.55(14.0)	0.60(15.2)	0.19(4.8)	0.56(14.3)	1.00(25.4)	0.98(25.0)
3/8	M14x 1.5	-MC-FT6-MS14	1.63(41.3)	0.47(12.0)	0.66(16.8)	0.28(7.1)	0.69(17.5)	0.75(19.1)	0.75(19.0)
3/8	M16x 1.5	-MC-FT6-MS16	1.63(41.3)	0.47(12.0)	0.66(16.8)	0.28(7.1)	0.69(17.5)	0.87(22.2)	0.83(21.0)
3/8	M18x 1.5	-MC-FT6-MS18	1.65(41.8)	0.47(12.0)	0.66(16.8)	0.28(7.1)	0.69(17.5)	0.94(23.8)	0.91(23.0)
3/8	M20x 1.5	-MC-FT6-MS20	1.78(45.1)	0.55(14.0)	0.66(16.8)	0.28(7.1)	0.69(17.5)	1.00(25.4)	0.98(25.0)
1/2	M16x 1.5	-MC-FT8-MS16	1.73(44.0)	0.47(12.0)	0.90(22.8)	0.35(9.0)	0.87(22.2)	0.87(22.2)	0.83(21.0)
1/2	M18x 1.5	-MC-FT8-MS18	1.73(44.0)	0.47(12.0)	0.90(22.9)	0.39(10.0)	0.87(22.2)	0.94(23.8)	0.91(23.0)
1/2	M20x 1.5	-MC-FT8-MS20	1.89(47.9)	0.55(14.0)	0.90(22.9)	0.41(10.4)	0.87(22.2)	1.00(25.4)	0.98(25.0)
1/2	M22x 1.5	-MC-FT8-MS22	1.91(48.5)	0.55(14.0)	0.90(22.9)	0.41(10.4)	0.87(22.2)	1.06(27.0)	1.06(27.0)

Male Connector

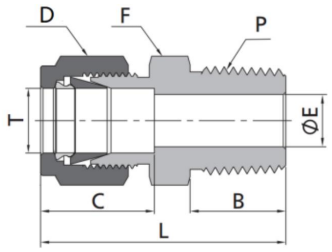

Metric Tube to NPT Thread

T-Tube O.D. (mm)	P-NPT Size	Basic Ordering Number	Dimension, mm. (in.)					
			L	B	C	E	D	F
2	1/8	-MC-MT2-MN2	30.5(1.20)	9.7(0.38)	12.9(0.51)	1.7(0.07)	12.0(0.47)	12.0(0.47)
3	1/8	-MC-MT3-MN2	30.5(1.20)	9.7(0.38)	12.9(0.51)	2.4(0.09)	12.0(0.47)	12.0(0.47)
3	1/4	-MC-MT3-MN4	35.6(1.40)	14.2(0.56)	12.9(0.51)	2.4(0.09)	12.0(0.47)	14.0(0.55)
4	1/8	-MC-MT4-MN2	31.2(1.23)	9.7(0.38)	13.7(0.54)	2.4(0.09)	12.0(0.47)	12.0(0.47)
4	1/4	-MC-MT4-MN4	36.3(1.43)	14.2(0.56)	13.7(0.54)	2.4(0.09)	12.0(0.47)	14.0(0.55)
6	1/8	-MC-MT6-MN2	32.8(1.29)	9.7(0.38)	15.3(0.60)	4.8(0.19)	14.0(0.55)	14.0(0.55)
6	1/4	-MC-MT6-MN4	37.9(1.49)	14.2(0.56)	15.3(0.60)	4.8(0.19)	14.0(0.55)	14.0(0.55)
6	3/8	-MC-MT6-MN6	38.4(1.51)	14.2(0.56)	15.3(0.60)	4.8(0.19)	14.0(0.55)	18.0(0.71)
8	1/8	-MC-MT8-MN2	34.2(1.35)	9.7(0.38)	16.2(0.64)	4.8(0.19)	16.0(0.63)	15.0(0.59)
8	1/4	-MC-MT8-MN4	38.7(1.52)	14.2(0.56)	16.2(0.64)	6.4(0.25)	16.0(0.63)	15.0(0.59)
8	3/8	-MC-MT8-MN6	393(1.55)	14.2(0.56)	16.2(0.64)	6.4(0.25)	16.0(0.63)	18.0(0.71)
10	1/4	-MC-MT10-MN4	40.9(1.61)	14.2(0.56)	17.2(0.68)	7.1(0.28)	19.0(0.75)	18.0(0.71)
10	3/8	-MC-MT10-MN6	40.9(1.61)	14.2(0.56)	17.2(0.68)	7.9(0.31)	19.0(0.75)	18.0(0.71)
10	1/2	-MC-MT10-MN8	46.5(1.83)	19.1(0.75)	17.2(0.68)	7.9(0.31)	19.0(0.75)	22.0(0.87)
12	1/4	-MC-MT12-MN4	43.4(1.71)	14.2(0.56)	22.8(0.90)	7.1(0.28)	22.0(0.87)	22.0(0.87)
12	3/8	-MC-MT12-MN6	43.4(1.71)	14.2(0.56)	22.8(0.90)	9.5(0.37)	22.0(0.87)	22.0(0.87)
12	1/2	-MC-MT12-MN8	49.0(1.93)	19.1(0.75)	22.8(0.90)	9.5(0.37)	22.0(0.87)	22.0(0.87)
12	3/4	-MC-MT12-MN12	50.5(1.99)	19.1(0.75)	22.8(0.90)	9.5(0.37)	22.0(0.87)	27.0(1.06)
14	1/8	-MC-MT14-MN2	38.8(1.53)	9.7(0.38)	24.4(0.96)	4.8(0.19)	25.0(0.98)	24.0(0.94)
14	1/4	-MC-MT14-MN4	44.1(1.74)	14.2(0.56)	24.4(0.96)	7.1(0.28)	25.0(0.98)	24.0(0.94)
14	3/8	-MC-MT14-MN6	44.1(1.74)	14.2(0.56)	24.4(0.96)	9.5(0.37)	25.0(0.98)	24.0(0.94)
14	1/2	-MC-MT14-MN8	49.0(1.93)	19.1(0.75)	24.4(0.96)	11.1(0.44)	25.0(0.98)	24.0(0.94)
14	3/4	-MC-MT14-MN12	50.5(1.99)	19.1(0.75)	24.4(0.96)	11.1(0.44)	25.0(0.98)	27.0(1.06)
15	1/2	-MC-MT15-MN8	49.0(1.93)	19.1(0.75)	24.4(0.96)	11.9(0.47)	25.0(0.98)	24.0(0.94)
15	3/4	-MC-MT15-MN12	50.5(1.99)	19.1(0.75)	24.4(0.96)	11.9(0.47)	25.0(0.98)	27.0(1.06)
16	1/4	-MC-MT16-MN4	44.1(1.74)	14.2(0.56)	24.4(0.96)	7.1(0.28)	25.0(0.98)	24.0(0.94)
16	3/8	-MC-MT16-MN6	44.1(1.74)	14.2(0.56)	24.4(0.96)	9.5(0.37)	25.0(0.98)	24.0(0.94)
16	1/2	-MC-MT16-MN8	49.0(1.93)	19.1(0.75)	24.4(0.96)	11.9(0.47)	25.0(0.98)	24.0(0.94)
16	3/4	-MC-MT16-MN12	50.5(1.99)	19.1(0.75)	24.4(0.96)	12.7(0.5)	25.0(0.98)	27.0(1.06)
18	3/8	-MC-MT18-MN6	45.6(1.80)	14.2(0.56)	24.4(0.96)	9.5(0.37)	30.0(1.18)	27.0(1.06)
18	1/2	-MC-MT18-MN8	50.5(1.99)	19.1(0.75)	24.4(0.96)	11.9(0.47)	30.0(1.18)	27.0(1.06)
18	3/4	-MC-MT18-MN12	50.5(1.99)	19.1(0.75)	24.4(0.96)	15.1(0.59)	30.0(1.18)	27.0(1.06)
20	1/2	-MC-MT20-MN8	52.3(2.06)	19.1(0.75)	26.0(1.02)	11.9(0.47)	32.0(1.26)	30.0(1.18)
20	3/4	-MC-MT20-MN12	52.3(2.06)	19.1(0.75)	26.0(1.02)	15.9(0.63)	32.0(1.26)	30.0(1.18)
20	1	-MC-MT20-MN16	57.1(2.25)	23.9(0.94)	26.0(1.02)	15.9(0.63)	32.0(1.26)	35.0(1.38)
22	1/2	-MC-MT22-MN8	52.3(2.06)	19.1(0.75)	26.0(1.02)	11.9(0.47)	32.0(1.26)	30.0(1.18)
22	3/4	-MC-MT22-MN12	523(2.06)	19.1(0.75)	26.0(1.02)	15.9(0.63)	32.0(1.26)	30.0(1.18)
22	1	-MC-MT22-MN16	57.1(2.25)	23.9(0.94)	26.0(1.02)	18.3(0.72)	32.0(1.26)	35.0(1.38)
25	1/2	-MC-MT25-MN8	57.5(2.26)	19.1(0.75)	31.3(1.23)	11.9(0.47)	38.0(1.50)	35.0(1.38)
25	3/4	-MC-MT25-MN12	57.5(2.26)	19.1(0.75)	31.3(1.23)	15.9(0.63)	38.0(1.50)	35.0(1.38)
25	1	-MC-MT25-MN16	62.3(2.45)	23.9(0.94)	31.3(1.23)	21.8(0.86)	38.0(1.50)	35.0(1.38)
28	1	-MC-MT28-MN16	72.4(2.85)	23.9(0.94)	36.6(1.44)	21.8(0.86)	46.0(1.81)	41.0(1.61)
28	1 1/4	-MC-MT28-MN20	73.1(2.88)	23.9(0.94)	36.6(1.44)	21.8(0.86)	46.0(1.81)	46.0(1.81)
30	1 1/4	-MC-MT30-MN20	77.2(3.04)	23.9(0.94)	39.6(1.56)	26.2(1.03)	50.0(1.97)	46.0(1.81)
32	1 1/4	-MC-MT32-MN20	79.6(3.13)	23.9(0.94)	42.0(1.65)	28.6(1.13)	50.0(1.97)	46.0(1.81)
38	1 1/2	-MC-MT38-MN24	91.6(3.61)	26.2(1.03)	49.4(1.94)	33.7(1.33)	60.0(2.36)	55.0(2.17)

Male Connector

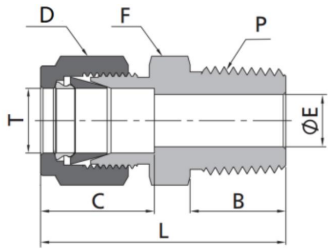

Metric Tube to RT Thread

T-Tube O.D. (mm)	P-RT Size	Basic Ordering Number	Dimension, mm. (in.)					
			L	B	C	E	D	F
2	1/8	-MC-MT2-RT2	30.5(1.20)	9.7(0.38)	12.9(0.51)	1.7(0.07)	12.0(0.47)	12.0(0.47)
3	1/8	-MC-MT3-RT2	30.5(1.20)	9.7(0.38)	12.9(0.51)	2.4(0.09)	12.0(0.47)	12.0(0.47)
3	1/4	-MC-MT3-RT4	35.6(1.40)	14.2(0.56)	12.9(0.51)	2.4(0.09)	12.0(0.47)	14.0(0.55)
4	1/8	-MC-MT4-RT2	31.2(1.23)	9.7(0.38)	13.7(0.54)	2.4(0.09)	12.0(0.47)	12.0(0.47)
4	1/4	-MC-MT4-RT4	36.3(1.43)	14.2(0.56)	13.7(0.54)	2.4(0.09)	12.0(0.47)	14.0(0.55)
6	1/8	-MC-MT6-R72	32.8(1.29)	9.7(0.38)	15.3(0.60)	4.8(0.19)	14.0(0.55)	14.0(0.55)
6	1/4	-MC-MT6-RT4	37.9(1.49)	14.2(0.56)	15.3(0.60)	4.8(0.19)	14.0(0.55)	14.0(0.55)
6	3/8	-MC-MT6-RT6	38.4(1.51)	14.2(0.56)	15.3(0.60)	4.8(0.19)	14.0(0.55)	18.0(0.71)
8	1/8	-MC-MT8-RT2	34.2(1.35)	9.7(0.38)	16.2(0.64)	4.8(0.19)	16.0(0.63)	15.0(0.59)
8	1/4	-MC-MT8-RT4	38.7(1.52)	14.2(0.56)	16.2(0.64)	6.4(0.25)	16.0(0.63)	15.0(0.59)
8	3/8	-MC-MT8-RT6	39.2(1.54)	14.2(0.56)	16.2(0.64)	6.4(0.25)	16.0(0.63)	18.0(0.71)
10	1/4	-MC-MT10-RT4	40.9(1.61)	14.2(0.56)	17.2(0.68)	7.1(0.28)	19.0(0.75)	18.0(0.71)
10	3/8	-MC-MT10-RT6	40.9(1.61)	14.2(0.56)	17.2(0.68)	7.9(0.31)	19.0(0.75)	18.0(0.71)
10	1/2	-MC-MT10-RT8	46.5(1.83)	19.1(0.75)	17.2(0.68)	7.9(0.31)	19.0(0.75)	22.0(0.87)
12	1/4	-MC-MT12-RT4	43.4(1.71)	14.2(0.56)	22.8(0.90)	7.1(0.28)	22.0(0.87)	22.0(0.87)
12	3/8	-MC-MT12-RT6	43.4(1.71)	14.2(0.56)	22.8(0.90)	9.5(0.37)	22.0(0.87)	22.0(0.87)
12	1/2	-MC-MT12-RT8	49.0(1.93)	19.1(0.75)	22.8(0.90)	9.5(0.37)	22.0(0.87)	22.0(0.87)
12	3/4	-MC-MT12-RT12	50.5(1.99)	19.1(0.75)	22.8(0.90)	9.5(0.37)	22.0(0.87)	27.0(1.06)
14	1/4	-MC-MT14-RT4	44.1(1.74)	14.2(0.56)	22.4(0.88)	7.1(0.28)	25.0(0.98)	24.0(0.94)
14	3/8	-MC-MT14-RT6	44.1(1.74)	14.2(0.56)	22.4(0.88)	7.9(0.31)	25.0(0.98)	24.0(0.94)
14	1/2	-MC-MT14-RT8	49.0(1.93)	19.1(0.75)	22.4(0.88)	11.1(0.44)	25.0(0.98)	24.0(0.94)
14	3/4	-MC-MT14-RT12	50.5(1.99)	19.1(0.75)	22.4(0.88)	11.1(0.44)	25.0(0.98)	27.0(1.06)
15	1/2	-MC-MT15-RT8	49.0(1.93)	19.1(0.75)	22.4(0.88)	11.9(0.47)	25.0(0.98)	24.0(0.94)
16	1/4	-MC-MT16-RT4	44.1(1.74)	14.2(0.56)	22.4(0.88)	7.1(0.28)	25.0(0.98)	24.0(0.94)
16	3/8	-MC-MT16-RT6	44.1(1.74)	14.2(0.56)	22.4(0.88)	9.5(0.37)	25.0(0.98)	24.0(0.94)
16	1/2	-MC-MT16-RT8	49.0(1.93)	19.1(0.75)	22.4(0.88)	11.9(0.47)	25.0(0.98)	24.0(0.94)
16	3/4	-MC-MT16-RT12	50.5(1.99)	19.1(0.75)	22.4(0.88)	12.7(0.5)	25.0(0.98)	27.0(1.06)
18	1/2	-MC-MT18-RT8	50.5(1.99)	19.1(0.75)	22.4(0.88)	11.9(0.47)	30.0(1.18)	27.0(1.06)
18	3/4	-MC-MT18-RT12	50.5(1.99)	19.1(0.75)	22.4(0.88)	15.1(0.59)	30.0(1.18)	27.0(1.06)
20	1/2	-MC-MT20-RT8	52.3(2.06)	19.1(0.75)	26.0(1.02)	11.9(0.47)	32.0(1.26)	30.0(1.18)
20	3/4	-MC-MT20-RT12	52.3(2.06)	19.1(0.75)	26.0(1.02)	15.9(0.63)	32.0(1.26)	30.0(1.18)
22	3/4	-MC-MT22-RT12	52.3(2.06)	19.1(0.75)	26.0(1.02)	15.9(0.63)	32.0(1.26)	30.0(1.18)
22	1	-MC-MT22-RT16	57.1(2.25)	23.9(0.94)	26.0(1.02)	18.3(0.72)	32.0(1.26)	35.0(138)
25	1/2	-MC-MT25-RT8	57.5(2.26)	19.1(0.75)	31.3(1.23)	11.9(0.47)	38.0(1.50)	35.0(1.38)
25	3/4	-MC-MT25-RT12	57.5(2.26)	19.1(0.75)	31.3(1.23)	15.9(0.63)	38.0(1.50)	35.0(1.38)
25	1	-MC-MT25-RT16	62.3(2.45)	23.9(0.94)	31.3(1.23)	21.8(0.86)	38.0(1.50)	35.0(1.38)
28	1	-MC-MT28-RT16	72.4(2.85)	23.9(0.94)	36.6(1.44)	21.8(0.86)	46.0(1.81)	41.0(1.61)
28	1 1/4	-MC-MT28-RT20	73.1(2.88)	23.9(0.94)	36.6(1.44)	21.8(0.86)	46.0(1.81)	46.0(1.81)
30	1 1/4	-MC-MT30-RT20	77.2(3.04)	23.9(0.94)	39.6(1.56)	26.2(1.03)	50.0(1.97)	46.0(1.81)
32	1 1/4	-MC-MT32-RT20	79.6(3.13)	23.9(0.94)	42.0(1.65)	28.6(1.13)	50.0(1.97)	46.0(1.81)
38	1 1/2	-MC-MT38-RT24	91.6(3.61)	26.2(1.03)	49.4(1.94)	33.7(1.33)	60.0(2.36)	55.0(2.17)

Male Connector

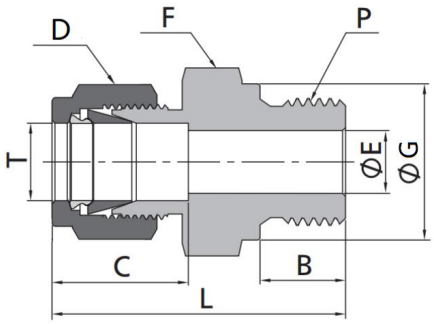

Metric Tube to ISO Parallel Thread

T-Tube O.D. (mm)	P-RS Size	Basic Ordering Number	Dimension, mm. (in.)						
			L	B	C	E	D	F	G
2	1/8	-MC-MT2-RS2	30.0(1.18)	7.1(0.28)	12.9(0.51)	1.7(0.07)	12.0(0.47)	14.0(0.55)	13.7(0.54)
3	1/8	-MC-MT3-RS2	30.0(1.18)	7.1(0.28)	12.9(0.51)	2.4(0.09)	12.0(0.47)	14.0(0.55)	13.7(0.54)
3	1/4	-MC-MT3-RS4	35.3(1.39)	11.2(0.44)	12.9(0.51)	2.4(0.09)	12.0(0.47)	19.0(0.75)	18.0(0.71)
4	1/8	-MC-MT4-RS2	30.7(1.21)	7.1(0.28)	13.7(0.54)	2.4(0.09)	12.0(0.47)	14.0(0.55)	13.7(0.54)
4	1/4	-MC-MT4-RS4	36.0(1.42)	11.2(0.44)	13.7(0.54)	2.4(0.09)	12.0(0.47)	19.0(0.75)	18.0(0.71)
6	1/8	-MC-MT6-RS2	32.3(1.27)	7.1(0.28)	15.3(0.60)	4.0(0.16)	14.0(0.55)	14.0(0.55)	13.7(0.54)
6	1/4	-MC-MT6-RS4	37.6(1.48)	11.2(0.44)	15.3(0.60)	4.8(0.19)	14.0(0.55)	19.0(0.75)	18.0(0.71)
6	3/8	-MC-MT6-RS6	38.9(1.53)	11.2(0.44)	153(0.60)	4.8(0.19)	14.0(0.55)	22.0(0.87)	21.6(0.85)
8	1/8	-MC-MT8-RS2	33.2(1.31)	7.1(0.28)	16.2(0.64)	4.0(0.16)	16.0(0.63)	15.0(0.59)	14.5(0.57)
8	1/4	-MC-MT8-RS4	38.5(1.52)	11.2(0.44)	16.2(0.64)	6.4(0.25)	16.0(0.63)	19.0(0.75)	18.0(0.71)
8	3/8	-MC-MT8-RS6	39.8(1.57)	11.2(0.44)	16.2(0.64)	6.4(0.25)	16.0(0.63)	22.0(0.87)	21.6(0.85)
10	1/4	-MC-MT10-RS4	39.4(1.55)	11.2(0.44)	17.2(0.68)	5.9(0.23)	19.0(0.75)	19.0(0.75)	18.0(0.71)
10	3/8	-MC-MT10-RS6	40.6(1.60)	11.2(0.44)	17.2(0.68)	7.9(0.31)	19.0(0.75)	22.0(0.87)	21.6(0.85)
10	1/2	-MC-MT10-RS8	46.5(1.83)	14.2(0.56)	17.2(0.68)	7.9(0.31)	19.0(0.75)	27.0(1.06)	25.9(1.02)
12	1/4	-MC-MT12-RS4	42.6(1.68)	11.2(0.44)	22.8(0.90)	5.9(0.23)	22.0(0.87)	22.0(0.87)	21.6(0.85)
12	3/8	-MC-MT12-RS6	43.1(1.70)	11.2(0.44)	22.8(0.90)	7.9(0.31)	22.0(0.87)	22.0(0.87)	21.6(0.85)
12	1/2	-MC-MT12-RS8	49.0(1.93)	14.2(0.56)	22.8(0.90)	9.5(0.37)	22.0(0.87)	27.0(1.06)	25.9(1.02)
12	3/4	-MC-MT12-RS12	52.8(2.08)	15.7(0.62)	22.8(0.90)	9.5(0.37)	22.0(0.87)	35.0(1.38)	32.0(1.26)
14	3/8	-MC-MT14-RS6	43.9(1.73)	11.2(0.44)	24.4(0.96)	7.9(0.31)	25.0(0.98)	24.0(0.94)	21.6(0.85)
14	1/2	-MC-MT14-RS8	49.0(1.93)	14.2(0.56)	24.4(0.96)	11.1(0.44)	25.0(0.98)	27.0(1.06)	25.9(1.02)
14	3/4	-MC-MT14-RS12	52.8(2.08)	15.7(0.62)	24.4(0.96)	11.1(0.44)	25.0(0.98)	35.0(1.38)	32.0(1.26)
15	3/8	-MC-MT15-RS6	43.9(1.73)	11.2(0.44)	24.4(0.96)	7.9(0.31)	25.0(0.98)	24.0(0.94)	21.6(0.85)
15	1/2	-MC-MT15-RS8	49.0(1.93)	14.2(0.56)	24.4(0.96)	11.9(0.47)	25.0(0.98)	27.0(1.06)	25.9(1.02)
15	3/4	-MC-MT15-RS12	52.8(2.08)	15.7(0.62)	24.4(0.96)	11.9(0.47)	25.0(0.98)	35.0(1.38)	32.0(1.26)
16	3/8	-MC-MT16-RS6	43.9(1.73)	11.2(0.44)	24.4(0.96)	7.9(0.31)	25.0(0.98)	24.0(0.94)	21.6(0.85)
16	1/2	-MC-MT16-RS8	49.0(1.93)	14.2(0.56)	24.4(0.96)	11.9(0.47)	25.0(0.98)	27.0(1.06)	25.9(1.02)
18	1/2	-MC-MT18-RS8	49.0(1.93)	14.2(0.56)	24.4(0.96)	11.9(0.47)	30.0(1.18)	27.0(1.06)	25.9(1.02)
18	3/4	-MC-MT18-RS12	52.8(2.08)	15.7(0.62)	24.4(0.96)	15.1(0.59)	30.0(1.18)	35.0(1.38)	32.0(1.26)
20	1/2	-MC-MT20-RS8	50.5(1.99)	14.2(0.56)	26.0(1.02)	11.9(0.47)	32.0(1.26)	30.0(1.18)	25.9(1.02)
20	3/4	-MC-MT20-RS12	52.8(2.08)	15.7(0.62)	26.0(1.02)	15.9(0.63)	32.0(1.26)	35.0(1.38)	32.0(1.26)
22	3/4	-MC-MT22-RS12	52.8(2.08)	15.7(0.62)	26.0(1.02)	15.9(0.63)	32.0(1.26)	35.0(1.38)	32.0(1.26)
22	1	-MC-MT22-RS16	55.3(2.18)	18.3(0.72)	26.0(1.02)	18.3(0.72)	32.0(1.26)	41.0(1.61)	39.1(1.54)
25	3/4	-MC-MT25-RS12	57.5(2.26)	15.7(0.62)	31.3(1.23)	15.9(0.63)	38.0(1.50)	35.0(1.38)	32.0(1.26)
25	1	-MC-MT25-RS16	60.1(2.37)	18.3(0.72)	31.3(1.23)	19.8(0.78)	38.0(1.50)	41.0(1.61)	39.1(1.54)
28	1	-MC-MT28-RS16	70.1(2.76)	18.3(0.72)	36.6(1.44)	19.8(0.78)	46.0(1.81)	41.0(1.61)	39.1(1.54)
28	1 1/4	-MC-MT28-RS20	73.9(2.91)	19.8(0.78)	36.6(1.44)	21.8(0.86)	46.0(1.81)	50.0(1.97)	49.0(1.93)
30	1 1/4	-MC-MT30-RS20	76.5(3.01)	19.8(0.78)	39.6(1.56)	25.0(0.98)	50.0(1.97)	50.0(1.97)	49.0(1.93)
32	1 1/4	-MC-MT32-RS20	78.9(3.11)	19.8(0.78)	42.0(1.65)	25.0(0.98)	50.0(1.97)	50.0(1.97)	49.0(1.93)
38	1 1/2	-MC-MT38-RS24	90.8(3.57)	22.1(0.87)	49.4(1.94)	31.8(1.25)	60.0(2.36)	55.0(2.17)	54.7(2.15)

Male Connector

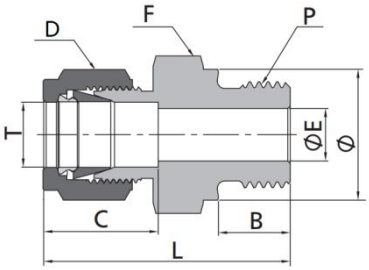

Metric Tube to ISO Parallel Thread

T-Tube O.D. (mm)	P-RP Size	Basic Ordering Number	Dimension, mm. (in.)						
			L	B	C	E	D	F	G
3	1/8	-MC-MT3-RP2	30.0(1.18)	7.1(0.28)	12.9(0.51)	2.4(0.09)	12.0(0.47)	14.0(0.55)	13.8(0.54)
4	1/8	-MC-MT4-RP2	30.7(1.21)	7.1(0.28)	13.7(0.54)	2.4(0.09)	12.0(0.47)	14.0(0.55)	13.8(0.54)
6	1/4	-MC-MT6-RP4	37.6(1.48)	11.2(0.44)	15.3(0.60)	4.8(0.19)	14.0(0.55)	19.0(0.75)	18.0(0.71)
8	1/4	-MC-MT8-RP4	38.5(1.52)	11.2(0.44)	16.2(0.64)	5.9(0.23)	16.0(0.63)	19.0(0.75)	18.0(0.71)
10	3/8	-MC-MT10-RP6	40.6(1.60)	11.2(0.44)	17.2(0.68)	7.9(0.31)	19.0(0.75)	22.0(0.87)	21.8(0.86)
12	3/8	-MC-MT12-RP6	43.1(1.70)	11.2(0.44)	22.8(0.90)	7.9(0.31)	22.0(0.87)	22.0(0.87)	21.8(0.86)
12	1/2	-MC-MT12-RP8	49.0(1.93)	14.2(0.56)	22.8(0.90)	9.5(0.37)	22.0(0.87)	27.0(1.06)	26.0(1.02)
15	1/2	-MC-MT15-RP8	49.0(1.93)	14.2(0.56)	24.4(0.96)	11.9(0.47)	25.0(0.98)	27.0(1.06)	26.0(1.02)
16	1/2	-MC-MT16-RP8	49.0(1.93)	14.2(0.56)	24.4(0.96)	11.9(0.47)	25.0(0.98)	27.0(1.06)	26.0(1.02)
18	1/2	-MC-MT18-RP8	49.0(1.93)	14.2(0.56)	24.4(0.96)	11.9(0.47)	30.0(1.18)	27.0(1.06)	26.0(1.02)
20	3/4	-MC-MT20-RP12	52.8(2.08)	15.7(0.62)	26.0(1.02)	15.9(0.63)	32.0(1.26)	35.0(138)	32.0(1.26)
22	3/4	-MC-MT22-RP12	52.8(2.08)	15.7(0.62)	26.0(1.02)	15.9(0.63)	32.0(1.26)	35.0(1.38)	32.0(1.26)
25	1	-MC-MT25-RP16	60.1(2.37)	18.3(0.72)	31.3(1.23)	19.8(0.78)	38.0(1.50)	41.0(1.61)	39.0(1.54)
28	1	-MC-MT28-RP16	70.1(2.76)	18.3(0.72)	36.6(1.44)	19.8(0.78)	46.0(1.81)	41.0(1.61)	39.0(1.54)
28	1 1/4	-MC-MT28-RP20	73.9(2.91)	19.8(0.78)	36.6(1.44)	21.8(0.86)	46.0(1.81)	50.0(1.97)	49.0(1.93)
30	1 1/4	-MC-MT30-RP20	76.5(3.01)	19.8(0.78)	39.6(1.56)	26.2(1.03)	50.0(1.97)	50.0(1.97)	49.0(1.93)
32	1 1/4	-MC-MT32-RP20	78.9(3.11)	19.8(0.78)	42.0(1.65)	28.6(1.13)	50.0(1.97)	50.0(1.97)	49.0(1.93)
38	1 1/2	-MC-MT38-RP24	89.3(3.52)	20.6(0.81)	49.4(1.94)	31.8(1.25)	60.0(2.36)	55.0(2.17)	54.7(2.15)

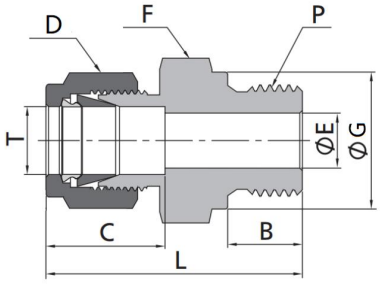

Metric Tube to Metric Thread

T-Tube O.D. (mm)	P-Metric Size	Basic Ordering Number	Dimension, mm(in.)						
			L	B	C	E	D	F	G
6	M8x 1	-MC-MT6-MS8	33.3(1.31)	8.0(0.31)	153(0.60)	3.0(0.12)	14.0(0.55)	14.0(0.55)	12.0(0.47)
6	M10x 1	-MC-MT6-MS10	33.3(1.31)	8.0(0.31)	15.3(0.60)	4.0(0.16)	14.0(0.55)	14.0(0.55)	14.0(0.55)
8	M10x 1	-MC-MT8-MS10	34.1(1.34)	8.0(031)	16.2(0.64)	5.0(0.20)	16.0(0.63)	15.0(0.59)	14.0(0.55)
8	M12x 1.5	-MC-MT8-MS12	40.4(1.59)	12.0(0.47)	16.2(0.64)	6.0(0.24)	16.0(0.63)	18.0(0.71)	17.0(0.67)
10	M12x 1.5	-MC-MT10-MS12	40.7(1.60)	12.0(0.47)	17.2(0.68)	6.0(0.24)	19.0(0.75)	18.0(0.71)	17.0(0.67)
10	M14x 1.5	-MC-MT10-MS14	41.5(1.63)	12.0(0.47)	17.2(0.68)	7.9(0.31)	19.0(0.75)	19.0(0.75)	19.0(0.75)
12	M16x 1.5	-MC-MT12-MS16	45.5(1.79)	12.0(0.47)	22.8(0.90)	9.0(0.35)	22.0(0.87)	22.0(0.87)	21.0(0.83)
12	M20x 1.5	-MC-MT12-MS20	48.0(1.89)	14.0(0.55)	22.8(0.90)	9.5(0.37)	22.0(0.87)	25.0(0.98)	25.0(0.98)
14	M20x 1.5	-MC-MT14-MS20	48.0(1.89)	14.0(0.55)	24.4(0.96)	11.1(0.44)	25.0(0.98)	25.0(0.98)	25.0(0.98)
16	M20x 1.5	-MC-MT16-MS20	48.0(1.89)	14.0(0.55)	24.4(0.96)	12.0(0.47)	25.0(0.98)	25.0(0.98)	25.0(0.98)
18	M20x 1.5	-MC-MT18-MS20	48.5(1.91)	14.0(0.55)	24.4(0.96)	12.0(0.47)	30.0(1.18)	27.0(1.06)	25.0(0.98)
20	M20x 1.5	-MC-MT20-MS20	50.0(1.97)	14.0(0.55)	26.0(1.02)	12.0(0.47)	32.0(1.26)	30.0(1.18)	25.0(0.98)
22	M24x 1.5	-MC-MT22-MS24	50.5(1.99)	14.0(0.55)	26.0(1.02)	15.0(0.59)	32.0(1.26)	30.0(1.18)	32.0(1.26)
25	M27x2	-MC-MT25-MS27	57.5(2.26)	16.0(0.63)	31.3(1.23)	16.8(0.66)	38.0(1.50)	35.0(138)	32.0(1.26)

Thermocouple Connetors

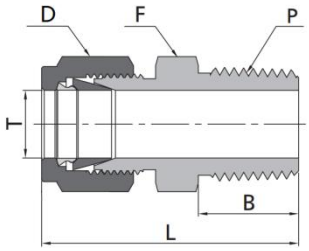

Fractional Tube to NPT Thread

T-Tube O.D. (in.)	P-NPT Size	Basic Ordering Number	Dimension, in. (mm)			
			L	B	C	D
1/16	1/16	-TMC-FT1-MN1	0.94(23.9)	0.38(9.7)	0.31(7.9)	0.31(7.9)
1/16	1/8	-TMC-FT1-MN2	1.03(26.2)	0.38(9.7)	0.31(7.9)	0.44(11.1)
1/8	1/16	-TMC-FT2-MN1	1.17(29.7)	0.38(9.7)	0.44(11.1)	0.44(11.1)
1/8	1/8	-TMC-FT2-MN2	1.20(30.5)	0.38(9.7)	0.44(11.1)	0.44(11.1)
1/8	1/4	-TMC-FT2-MN4	1.40(35.6)	0.56(14.2)	0.44(11.1)	0.56(14.3)
3/16	1/8	-TMC-FT3-MN2	1.23(31.2)	0.38(9.7)	0.50(12.7)	0.44(11.1)
3/16	1/4	-TMC-FT3-MN4	1.43(36.3)	0.56(14.2)	0.50(12.7)	0.56(14.3)
1/4	1/8	-TMC-FT4-MN2	1.29(32.8)	0.38(9.7)	0.56(14.3)	0.50(12.7)
1/4	1/4	-TMC-FT4-MN4	1.49(37.8)	0.56(14.2)	0.56(14.3)	0.56(14.3)
1/4	3/8	-TMC-FT4-MN6	1.51(38.4)	0.56(14.2)	0.56(14.3)	0.69(17.5)
1/4	1/2	-TMC-FT4-MN8	1.76(44.7)	0.75(19.1)	0.56(14.3)	0.87(22.2)
5/16	1/4	-TMC-FT5-MN4	1.52(38.6)	0.56(14.2)	0.63(15.9)	0.56(14.3)
3/8	1/4	-TMC-FT6-MN4	1.57(39.9)	0.56(14.2)	0.69(17.5)	0.63(15.9)
3/8	3/8	-TMC-FT6-MN6	1.57(39.9)	0.56(14.2)	0.69(17.5)	0.69(17.5)
3/8	1/2	-TMC-FT6-MN8	1.82(46.2)	0.75(19.1)	0.69(17.5)	0.87(22.2)
1/2	1/2	-TMC-FT8-MN8	1.93(49.0)	0.75(19.1)	0.87(22.2)	0.87(22.2)
1/2	3/4	-TMC-FT8-MN12	1.99(50.5)	0.75(19.1)	0.87(22.2)	1.06(27.0)
5/8	3/4	-TMC-FT10-MN12	1.99(50.5)	0.75(19.1)	1.00(25.4)	1.06(27.0)
3/4	3/4	-TMC-FT12-MN12	1.99(50.5)	0.75(19.1)	1.13(28.6)	1.06(27.0)
1	1	-TMC-FT16-MN16	2.45(62.2)	0.94(23.9)	1.50(38.1)	1.37(34.9)

Metric Tube to NPT Thread

T-Tube O.D. (mm)	P-NPT Size	Basic Ordering Number	Dimension, mm. (in.)			
			L	B	C	D
2	1/8	-TMC-MT2-MN2	30.5(1.20)	9.7(0.38)	12.0(0.47)	12.0(0.47)
3	1/8	-TMC-MT3-MN2	30.5(1.20)	9.7(0.38)	12.0(0.47)	12.0(0.47)
3	1/4	-TMC-MT3-MN4	35.6(1.40)	14.2(0.56)	12.0(0.47)	14.0(0.55)
4	1/8	-TMC-MT4-MN2	31.2(1.23)	9.7(0.38)	12.0(0.47)	12.0(0.47)
4	1/4	-TMC-MT4-MN4	36.3(1.43)	14.2(0.56)	12.0(0.47)	14.0(0.55)
6	1/8	-TMC-MT6-MN2	32.8(1.29)	9.7(0.38)	14.0(0.55)	14.0(0.55)
6	1/4	-TMC-MT6-MN4	37.9(1.49)	14.2(0.56)	14.0(0.55)	14.0(0.55)
8	1/4	-TMC-MT8-MN4	38.7(1.52)	14.2(0.56)	16.0(0.63)	15.0(0.59)
8	3/8	-TMC-MT8-MN6	39.3(1.55)	14.2(0.56)	16.0(0.63)	18.0(0.71)
10	3/8	-TMC-MT10-MN6	40.9(1.61)	14.2(0.56)	19.0(0.75)	18.0(0.71)
10	1/2	-TMC-MT10-MN8	46.5(1.83)	19.1(0.75)	19.0(0.75)	22.0(0.87)
12	3/8	-TMC-MT12-MN6	43.4(1.71)	14.2(0.56)	22.0(0.87)	22.0(0.87)
12	1/2	-TMC-MT12-MN8	49.0(1.93)	19.1(0.75)	22.0(0.87)	22.0(0.87)
12	3/4	-TMC-MT12-MN12	50.5(1.99)	19.1(0.75)	22.0(0.87)	27.0(1.06)
14	1/2	-TMC-MT14-MN8	49.0(1.93)	19.1(0.75)	25.0(0.98)	24.0(0.94)
14	3/4	-TMC-MT14-MN12	50.5(1.99)	19.1(0.75)	25.0(0.98)	27.0(1.06)
15	1/2	-TMC-MT15-MN8	49.0(1.93)	19.1(0.75)	25.0(0.98)	24.0(0.94)

Female Connector

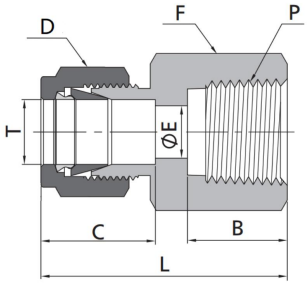

Fractional Tube to NPT Thread

T-Tube O.D. (in.)	P-NPT Size	Basic Ordering Number	Dimension,in(mm)					
			L	B	C	E	D	F
1/16	1/16	-FC-FT1-FN1	0.93(23.6)	0.39(9.9)	0.34(8.6)	0.05(1.3)	0.31(7.9)	0.44(11.1)
1/16	1/8	-FC-FT1-FN2	0.96(24.4)	0.41(10.4)	0.34(8.6)	0.05(1.3)	0.31(7.9)	0.56(14.3)
1/8	1/8	-FC-FT2-FN2	1.13(28.7)	0.41(10.4)	0.50(12.7)	0.09(2.3)	0.44(11.1)	0.56(14.3)
1/8	1/4	-FC-FT2-FN4	1.32(33.5)	0.59(15.0)	0.50(12.7)	0.09(2.3)	0.44(11.1)	0.75(19.1)
3/16	1/8	-FC-FT3-FN2	1.17(29.7)	0.41(10.4)	0.54(13.7)	0.12(3.0)	0.50(12.7)	0.56(14.3)
1/4	1/8	-FC-FT4-FN2	1.23(31.2)	0.41(10.4)	0.60(15.2)	0.19(4.8)	0.56(14.3)	0.56(14.3)
1/4	1/4	-FC-FT4-FN4	1.41(35.8)	0.59(15.0)	0.60(15.2)	0.19(4.8)	0.56(14.3)	0.75(19.1)
1/4	3/8	-FC-FT4-FN6	1.48(37.6)	0.59(15.0)	0.60(15.2)	0.19(4.8)	0.56(14.3)	0.87(22.2)
5/16	1/8	-FC-FT5-FN2	1.26(32.0)	0.41(10.4)	0.64(16.3)	16.3(6.4)	0.63(15.9)	0.56(14.3)
5/16	1/4	-FC-FT5-FN4	1.45(36.8)	0.59(15.0)	0.64(16.3)	0.25(6.4)	0.63(15.9)	0.75(19.1)
3/8	1/8	-FC-FT6-FN2	1.29(32.8)	0.41(10.4)	0.66(16.8)	0.28(7.1)	0.69(17.5)	0.63(15.9)
3/8	1/4	-FC-FT6-FN4	1.48(37.6)	0.59(15.0)	0.66(16.8)	0.28(7.1)	0.69(17.5)	0.75(19.1)
3/8	3/8	-FC-FT6-FN6	1.54(39.1)	0.59(15.0)	0.66(16.8)	0.28(7.1)	0.69(17.5)	0.87(22.0)
3/8	1/2	-FC-FT6-FN8	1.73(43.9)	0.78(19.8)	0.66(16.8)	0.28(7.1)	0.69(17.5)	1.06(27.0)
1/2	1/4	-FC-FT8-FN4	1.59(40.4)	0.59(15.0)	0.90(22.9)	0.41(10.4)	0.87(22.2)	0.81(20.6)
1/2	3/8	-FC-FT8-FN6	1.65(41.9)	0.59(15.0)	0.90(22.9)	0.41(10.4)	0.87(22.2)	0.87(22.2)
1/2	1/2	-FC-FT8-FN8	1.84(46.7)	0.78(19.8)	0.90(22.9)	0.41(10.4)	0.87(22.2)	1.06(27.0)
1/2	3/4	-FC-FT8-FN12	1.90(48.3)	0.81(20.6)	0.90(22.9)	0.41(10.4)	0.87(22.2)	1.31(33.3)
5/8	1/2	-FC-FT10-FN8	1.84(46.7)	0.78(19.8)	0.96(24.4)	0.50(12.7)	1.00(25.4)	1.06(27.0)
3/4	1/2	-FC-FT12-FN8	1.84(46.7)	0.78(19.8)	0.96(24.4)	0.62(15.7)	1.13(28.6)	1.06(27.0)
3/4	3/4	-FC-FT12-FN12	1.90(48.3)	0.81(20.6)	0.96(24.4)	0.62(15.7)	1.13(28.6)	1.31(33.3)
7/8	3/4	-FC-FT14-FN12	1.96(49.8)	0.81(20.6)	1.02(25.9)	0.72(18.3)	1.25(31.8)	1.31(33.3)
1	3/4	-FC-FT16-FN12	2.10(53.3)	0.81(20.6)	1.23(31.2)	0.88(22.4)	1.50(38.1)	1.37(34.9)
1	1	-FC-FT16-FN16	2.45(62.2)	1.00(25.4)	1.23(31.2)	0.88(22.4)	1.50(38.1)	1.63(41.3)
1 1/4	1 1/4	-FC-FT20-FN20	2.94(74.7)	1.00(25.4)	1.62(41.1)	1.09(27.7)	1.87(47.6)	2.13(54.0)
1 1/2	1 1/2	-FC-FT24-FN24	3.30(83.8)	1.09(27.7)	1.97(50.0)	1.43(36.3)	2.25(57.2)	2.37(60.3)

Fractional Tube to RT Thread

T-Tube O.D. (in.)	P-RT Size	Basic Ordering Number	Dimension,in(mm)					
			L	B	C	E	D	F
1/4	1/8	-FC-FT4-FR2	1.23(31.2)	0.41(10.4)	0.60(15.2)	0.19(4.8)	0.56(14.3)	0.56(14.3)
1/4	1/4	-FC-FT4-FR4	1.41(35.8)	0.59(15.0)	0.60(15.2)	0.19(4.8)	0.56(14.3)	0.75(19.1)
1/4	3/8	-FC-FT4-FR6	1.48(37.6)	0.59(15.0)	0.60(15.2)	0.19(4.8)	0.56(14.3)	0.87(22.2)
1/4	1/2	-FC-FT4-FR8	1.67(42.4)	0.78(19.8)	0.60(15.2)	0.19(4.8)	0.56(14.3)	1.06(27.0)
3/8	1/4	-FC-FT6-FR4	1.48(37.6)	0.59(15.0)	0.66(16.8)	0.28(7.1)	0.69(17.5)	0.75(19.1)
3/8	3/8	-FC-FT6-FR6	1.54(39.1)	0.59(15.0)	0.66(16.8)	0.28(7.1)	0.69(17.5)	0.87(22.2)
3/8	1/2	-FC-FT6-FR8	1.73(43.9)	0.78(19.8)	0.66(16.8)	0.28(7.1)	0.69(17.5)	1.06(27.0)
1/2	1/4	-FC-FT8-FR4	1.59(40.4)	0.59(15.0)	0.90(22.9)	0.41(10.4)	0.87(22.2)	0.81(20.6)
1/2	3/8	-FC-FT8-FR6	1.65(41.9)	0.59(15.0)	0.90(22.9)	0.41(10.4)	0.87(22.2)	0.87(22.2)
1/2	1/2	-FC-FT8-FR8	1.84(46.7	0.78(19.8)	0.90(22.9)	0.41(10.4)	0.87(22.2)	1.06(27.0)

Female Connector

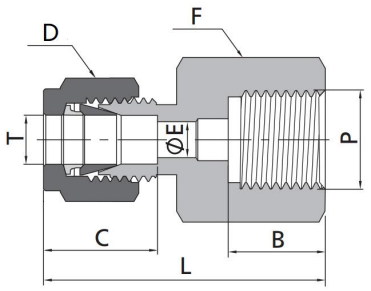

Fractional Tube to ISO Parallel Thread

T-Tube O.D. (in.)	P-RG Size	Basic Ordering Number	Dimension,in(mm)					
			L	B	C	E	D	F
1/8	1/4	-FC-FT2-FG4	1.39(35.3)	0.51(12.9)	0.50(12.7)	0.09(2.3)	0.44(11.1)	0.75(19.1)
1/8	3/8	-FC-FT2-FG6	1.52(38.7)	0.56(14.2)	0.50(12.7)	0.09(2.3)	0.44(11.1)	0.94(23.8)
1/4	1/4	-FC-FT4-FG4	1.48(37.6)	0.51(12.9)	0.60(15.2)	0.19(4.8)	0.56(14.3)	0.75(19.1)
1/4	3/8	-FC-FT4-FG6	1.48(37.6)	0.56(14.2)	0.60(15.2)	0.19(4.8)	0.56(14.3)	0.94(23.8)
1/4	1/2	-FC-FT4-FG8	1.71(43.4)	0.74(18.8)	0.60(15.2)	0.19(4.8)	0.56(14.3)	1.06(27.0)
5/16	1/4	-FC-FT5-FG4	1.51(38.4)	0.51(12.9)	0.64(16.3)	0.22(5.6)	0.63(15.9)	0.75(19.1)
5/16	3/8	-FC-FT5-FG6	1.54(39.2)	0.56(14.2)	0.64(16.3)	0.25(6.4)	0.63(15.9)	0.94(23.8)
5/16	1/2	-FC-FT5-FG8	1.61(40.9)	0.74(18.8)	0.64(16.3)	0.28(7.1)	0.63(15.9)	1.06(27.0)
3/8	1/4	-FC-FT6-FG4	1.54(39.1)	0.51(12.9)	0.66(16.8)	0.22(5.6)	0.69(17.5)	0.75(19.1)
3/8	3/8	-FC-FT6-FG6	1.52(38.6)	0.56(14.2)	0.66(16.8)	0.21(5.4)	0.69(17.5)	0.94(23.8)
3/8	1/2	-FC-FT6-FG8	1.65(41.9)	0.74(18.8)	0.66(16.8)	0.28(7.1)	0.69(17.5)	1.06(27.0)
1/2	1/4	-FC-FT8-FG4	1.65(41.9)	0.51(12.9)	0.90(22.9)	0.22(5.6)	0.87(22.2)	0.87(22.2)
1/2	3/8	-FC-FT8-FG6	1.75(44.5)	0.56(14.2)	0.90(22.9)	0.25(6.4)	0.87(22.2)	0.94(23.8)
1/2	1/2	-FC-FT8-FG8	1.90(48.3)	0.74(18.8)	0.90(22.9)	0.28(7.1)	0.87(22.2)	1.06(27.0)

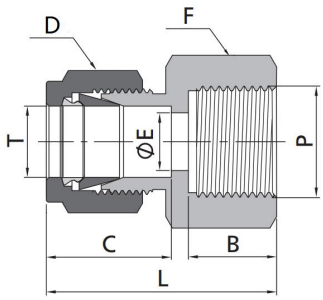

Fractional Tube to Metric Thread

T-Tube O.D. (in.)	P-RG Size	Basic Ordering Number	Dimension,in(mm)					
			L	B	C	E	D	F
1/8	M14 x 1.5	-FC-FT2-FM14	1.27(32.3)	0.51(13.0)	0.50(12.7)	0.09(2.3)	0.44(11.1)	0.75(19.1)
1/8	M16 x 1.5	-FC-FT2-FM16	1.31(33.3)	0.55(14.0)	0.50(12.7)	0.09(2.3)	0.44(11.1)	0.87(22.2)
1/8	M18 x 1.5	-FC-FT2-FM18	1.35(34.3)	0.59(15.0)	0.50(12.7)	0.09(2.3)	0.44(11.1)	1.00(25.4)
1/4	M16 x 1.5	-FC-FT4-FM16	1.41(35.8)	0.55(14.0)	0.60(15.2)	0.19(4.8)	0.56(14.3)	0.87(22.2)
1/4	M18 x 1.5	-FC-FT4-FM18	1.45(36.8)	0.59(15.0)	0.60(15.2)	0.19(4.8)	0.56(14.3)	1.00(25.4)
1/4	M20 x 1.5	-FC-FT4-FM20	1.49(37.8)	0.63(16.0)	0.60(15.2)	0.19(4.8)	0.56(14.3)	1.06(27.0)
3/8	M14 x 1.5	-FC-FT6-FM14	1.46(37.1)	0.51(13.0)	0.66(16.8)	0.28(7.1)	0.69(17.5)	0.75(19.1)
3/8	M16 x 1.5	-FC-FT6-FM16	1.48(37.5)	0.55(14.0)	0.66(16.8)	0.28(7.1)	0.69(17.5)	0.87(22.2)
3/8	M18 x 1.5	-FC-FT6-FM18	1.52(38.5)	0.59(15.0)	0.66(16.8)	0.28(7.1)	0.69(17.5)	1.00(25.4)
3/8	M20 x 1.5	-FC-FT6-FM20	1.56(39.5)	0.63(16.0)	0.66(16.8)	0.28(7.1)	0.69(17.5)	1.06(27.0)
1/2	M16 x 1.5	-FC-FT8-FM16	1.63(41.4)	0.55(14.0)	0.90(22.9)	0.33(8.4)	0.87(22.2)	0.87(22.2)
1/2	M18 x 1.5	-FC-FT8-FM18	1.67(42.4)	0.59(15.0)	0.90(22.9)	0.38(9.6)	0.87(22.2)	1.00(25.4)
1/2	M20 x 1.5	-FC-FT8-FM20	1.71(43.4)	0.63(16.0)	0.90(22.9)	0.41(10.4)	0.87(22.2)	1.06(27.0)
1/2	M22 x 1.5	-FC-FT8-FM22	1.75(44.4)	0.67(17.0)	0.90(22.9)	0.41(10.4)	0.87(22.2)	1.06(27.0)

Female Connector

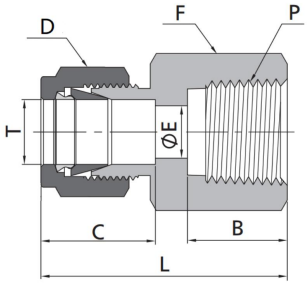

Metric Tube to NPT Thread

T-Tube O.D. (mm)	P-NPT Size	Basic Ordering Number	Dimension,mm(in.)					
			L	B	C	E	D	F
3	1/8	-FC-MT3-FN2	28.7(1.13)	10.4(0.41)	12.9(0.51)	2.4(0.09)	12.0(0.47)	14.0(0.55)
3	1/4	-FC-MT3-FN4	33.5(1.32)	15.0(0.59)	12.9(0.51)	2.4(0.09)	12.0(0.47)	19.0(0.75)
4	1/8	-FC-MT4-FN2	29.7(1.17)	10.4(0.41)	13.7(0.54)	2.4(0.09)	12.0(0.47)	14.0(0.55)
6	1/8	-FC-MT6-FN2	31.3(1.23)	10.4(0.41)	15.3(0.60)	4.8(0.19)	14.0(0.55)	14.0(0.55)
6	1/4	-FC-MT6-FN4	35.8(1.41)	15.0(0.59)	15.3(0.60)	4.8(0.19)	14.0(0.55)	19.0(0.75)
6	3/8	-FC-MT6-FN6	37.7(1.48)	15.0(0.59)	15.3(0.60)	4.8(0.19)	14.0(0.55)	22.0(0.87)
6	1/2	-FC-MT6-FN8	42.5(1.67)	19.8(0.78)	15.3(0.60)	4.8(0.19)	14.0(0.55)	27.0(1.06)
8	1/8	-FC-MT8-FN2	32.1(1.26)	10.4(0.41)	16.2(0.64)	4.8(0.19)	16.0(0.63)	15.0(0.59)
8	1/4	-FC-MT8-FN4	37.0(1.46)	15.0(0.59)	16.2(0.64)	6.4(0.25)	16.0(0.63)	19.0(0.75)
8	3/8	-FC-MT8-FN6	38.5(1.52)	15.0(0.59)	16.2(0.64)	6.4(0.25)	16.0(0.63)	22.0(0.87)
8	1/2	-FC-MT8-FN8	43.3(1.70)	19.8(0.78)	16.2(0.64)	6.4(0.25)	16.0(0.63)	27.0(1.06)
10	1/8	-FC-MT10-FN2	33.0(1.30)	10.4(0.41)	17.2(0.68)	4.8(0.19)	19.0(0.75)	15.0(0.59)
10	1/4	-FC-MT10-FN4	37.8(1.49)	15.0(0.59)	17.2(0.68)	7.9(0.31)	19.0(0.75)	19.0(0.75)
10	3/8	-FC-MT10-FN6	39.4(1.55)	15.0(0.59)	17.2(0.68)	7.9(0.31)	19.0(0.75)	22.0(0.87)
10	1/2	-FC-MT10-FN8	44.2(1.74)	19.8(0.78)	17.2(0.68)	7.9(0.31)	19.0(0.75)	27.0(1.06)
12	1/4	-FC-MT12-FN4	40.3(1.59)	15.0(0.59)	22.8(0.90)	7.9(0.31)	22.0(0.87)	22.0(0.87)
12	3/8	-FC-MT12-FN6	41.9(1.65)	15.0(0.59)	22.8(0.90)	9.5(0.37)	22.0(0.87)	22.0(0.87)
12	1/2	-FC-MT12-FN8	46.7(1.84)	19.8(0.78)	22.8(0.90)	9.5(0.37)	22.0(0.87)	27.0(1.06)
12	3/4	-FC-MT12-FN12	49.7(1.96)	20.6(0.81)	22.8(0.90)	9.5(0.37)	22.0(0.87)	35.0(1.38)
14	3/4	-FC-MT14-FN12	49.7(1.96)	20.6(0.81)	24.4(0.96)	11.1(0.44)	25.0(0.98)	35.0(1.38)
15	1/2	-FC-MT15-FN8	46.7(1.84)	19.8(0.78)	24.4(0.96)	11.9(0.47)	25.0(0.98)	27.0(1.06)
16	3/8	-FC-MT16-FN6	41.9(1.65)	15.0(0.59)	24.4(0.96)	9.5(0.37)	25.0(0.98)	27.0(1.06)
16	1/2	-FC-MT16-FN8	46.9(1.85)	19.8(0.78)	24.4(0.96)	11.9(0.47)	25.0(0.98)	27.0(1.06)
20	1/2	-FC-MT20-FN8	47.9(1.89)	19.8(0.78)	26.0(1.02)	11.9(0.47)	32.0(1.26)	30.0(1.18)
20	3/4	-FC-MT20-FN12	49.7(1.96)	20.6(0.81)	26.0(1.02)	15.9(0.63)	32.0(1.26)	35.0(1.38)
22	3/4	-FC-MT22-FN12	49.7(1.96)	20.6(0.81)	26.0(1.02)	15.9(0.63)	32.0(1.26)	35.0(1.38)
22	1	-FC-MT22-FN16	57.9(2.28)	25.4(1.00)	26.0(1.02)	18.3(0.72)	32.0(1.26)	41.0(1.61)
25	3/4	-FC-MT25-FN12	53.4(2.10)	20.6(0.81)	31.3(1.23)	15.9(0.63)	38.0(1.50)	35.0(1.38)
25	1	-FC-MT25-FN16	62.3(2.45)	25.4(1.00)	31.3(1.23)	21.8(0.86)	38.0(1.50)	41.0(1.61)

Female Connector

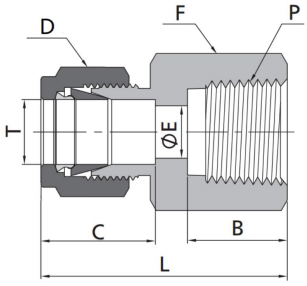

Metric Tube to RT Thread

T-Tube O.D. (mm)	P-RT Size	Basic Ordering Number	Dimension,mm(in.)					
			L	B	C	E	D	F
3	1/8	-FC-MT3-FR2	28.7(1.13)	10.4(0.41)	12.9(0.51)	2.4(0.09)	12.0(0.47)	14.0(0.55)
6	1/8	-FC-MT6-FR2	31.3(1.23)	10.4(0.41)	15.3(0.60)	4.8(0.19)	14.0(0.55)	14.0(0.55)
6	1/4	-FC-MT6-FR4	35.8(1.41)	15.0(0.59)	15.3(0.60)	4.8(0.19)	14.0(0.55)	19.0(0.75)
6	3/8	-FC-MT6-FR6	36.9(1.45)	15.0(0.59)	15.3(0.60)	4.8(0.19)	14.0(0.55)	22.0(0.87)
6	1/2	-FC-MT6-FR8	42.5(1.67)	19.8(0.78)	15.3(0.60)	4.8(0.19)	14.0(0.55)	27.0(1.06)
8	1/8	-FC-MT8-FR2	32.1(1.26)	10.4(0.41)	16.2(0.64)	6.4(0.25)	16.0(0.63)	15.0(0.59)
8	1/4	-FC-MT8-FR4	37.0(1.46)	15.0(0.59)	16.2(0.64)	6.4(0.25)	16.0(0.63)	19.0(0.75)
8	3/8	-FC-MT8-FR6	38.5(1.52)	15.0(0.59)	16.2(0.64)	6.4(0.25)	16.0(0.63)	22.0(0.87)
8	1/2	-FC-MT8-FR8	43.3(1.70)	19.8(0.78)	16.2(0.64)	6.4(0.25)	16.0(0.63)	27.0(1.06)
10	1/8	-FC-MT10-FR2	33.0(1.30)	10.4(0.41)	17.2(0.68)	7.9(0.31)	19.0(0.75)	18.0(0.71)
10	1/4	-FC-MT10-FR4	37.8(1.49)	15.0(0.59)	17.2(0.68)	7.9(0.31)	19.0(0.75)	19.0(0.75)
10	3/8	-FC-MT10-FR6	39.4(1.55)	15.0(0.59)	17.2(0.68)	7.9(0.31)	19.0(0.75)	22.0(0.87)
10	1/2	-FC-MT10-FR8	44.2(1.74)	19.8(0.78)	17.2(0.68)	7.9(0.31)	19.0(0.75)	27.0(1.06)
12	1/8	-FC-MT12-FR2	35.5(1.40)	10.4(0.41)	22.8(0.90)	8.3(0.33)	22.0(0.87)	22.0(0.87)
12	1/4	-FC-MT12-FR4	40.3(1.59)	15.0(0.59)	22.8(0.90)	9.5(0.37)	22.0(0.87)	22.0(0.87)
12	3/8	-FC-MT12-FR6	41.9(1.65)	15.0(0.59)	22.8(0.90)	9.5(0.37)	22.0(0.87)	22.0(0.87)
12	1/2	-FC-MT12-FR8	46.7(1.84)	19.8(0.78)	22.8(0.90)	9.5(0.37)	22.0(0.87)	27.0(1.06)
12	3/4	-FC-MT12-FR12	49.0(1.93)	20.6(0.81)	22.8(0.90)	9.5(0.37)	22.0(0.87)	35.0(1.38)
15	1/2	-FC-MT15-FR8	46.7(1.84)	19.8(0.78)	24.4(0.96)	11.9(0.47)	25.0(0.98)	27.0(1.06)
16	1/2	-FC-MT16-FR8	48.4(1.91)	19.8(0.78)	24.4(0.96)	11.9(0.47)	25.0(0.98)	27.0(1.06)
16	3/4	-FC-MT16-FR12	49.7(1.96)	20.6(0.81)	24.4(0.96)	12.7(0.5)	25.0(0.98)	35.0(1.38)
20	1/2	-FC-MT20-FR8	47.9(1.89)	19.8(0.78)	26.0(1.02)	11.9(0.47)	32.0(1.26)	30.0(1.18)
20	3/4	-FC-MT20-FR12	49.7(1.96)	20.6(0.81)	26.0(1.02)	15.9(0.63)	32.0(1.26)	35.0(1.38)
22	3/4	-FC-MT22-FR12	49.7(1.96)	20.6(0.81)	26.0(1.02)	15.9(0.63)	32.0(1.26)	35.0(1.38)
22	1	-FC-MT22-FR16	57.9(2.28)	25.4(1.00)	26.0(1.02)	18.3(0.72)	32.0(1.26)	41.0(1.61)
25	3/4	-FC-MT25-FR12	53.4(2.10)	20.6(0.81)	31.3(1.23)	15.9(0.63)	38.0(1.50)	35.0(1.38)
25	1	-FC-MT25-FR16	62.3(2.45)	25.4(1.00)	31.3(1.23)	21.8(0.86)	38.0(1.50)	41.0(1.61)
25	3/4	-FC-MT25-FN12	53.4(2.10)	20.6(0.81)	31.3(1.23)	15.9(0.63)	38.0(1.50)	35.0(1.38)
25	1	-FC-MT25-FN16	62.3(2.45)	25.4(1.00)	31.3(1.23)	21.8(0.86)	38.0(1.50)	41.0(1.61)

Female Connector

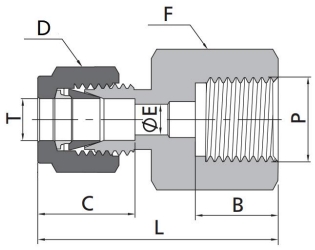

Metric Tube to ISO Parallel Thread

T-Tube O.D. (in.)	P-RG Size	Basic Ordering Number	Dimension,mm(in.)					
			L	B	C	E	D	F
3	1/4	-FC-MT3-FG4	35.3(1.39)	12.9(0.51)	12.9(0.51)	2.4(0.09)	12.0(0.47)	19.0(0.75)
6	1/4	-FC-MT6-FG4	37.6(1.48)	12.9(0.51)	15.3(0.60)	4.8(0.19)	14.0(0.55)	19.0(0.75)
6	3/8	-FC-MT6-FG6	37.6(1.48)	14.2(0.56)	15.3(0.60)	4.8(0.19)	14.0(0.55)	24.0(0.94)
6	1/2	-FC-MT6-FG8	43.5(1.71)	18.8(0.74)	15.3(0.60)	4.8(0.19)	14.0(0.55)	27.0(1.06)
8	1/4	-FC-MT8-FG4	38.5(1.52)	12.9(0.51)	16.2(0.64)	6.4(0.25)	16.0(0.63)	19.0(0.75)
8	3/8	-FC-MT8-FG6	36.2(1.43)	14.2(0.56)	16.2(0.64)	6.4(0.25)	16.0(0.63)	24.0(0.94)
8	1/2	-FC-MT8-FG8	41.0(1.61)	18.8(0.74)	16.2(0.64)	6.4(0.25)	16.0(0.63)	27.0(1.06)
10	1/4	-FC-MT10-FG4	39.4(1.55)	12.9(0.51)	17.2(0.68)	5.9(0.23)	19.0(0.75)	19.0(0.75)
10	3/8	-FC-MT10-FG6	38.8(1.53)	14.2(0.56)	17.2(0.68)	7.9(0.31)	19.0(0.75)	24.0(0.94)
10	1/2	-FC-MT10-FG8	42.1(1.66)	18.8(0.74)	17.2(0.68)	7.9(0.31)	19.0(0.75)	27.0(1.06)
12	1/4	-FC-MT12-FG4	41.9(1.65)	12.9(0.51)	22.8(0.90)	5.9(0.23)	22.0(0.87)	22.0(0.87)
12	3/8	-FC-MT12-FG6	44.4(1.75)	14.2(0.56)	22.8(0.90)	7.9(0.31)	22.0(0.87)	24.0(0.94)
12	1/2	-FC-MT12-FG8	48.2(1.90)	18.8(0.74)	22.8(0.90)	9.5(0.37)	22.0(0.87)	27.0(1.06)
20	1/2	-FC-MT20-FG8	54.3(2.14)	18.8(0.74)	26.0(1.02)	11.9(0.47)	32.0(1.26)	30.0(1.18)
22	1/2	-FC-MT22-FG8	54.3(2.14)	18.8(0.74)	26.0(1.02)	11.9(0.47)	32.0(1.26)	30.0(1.18)

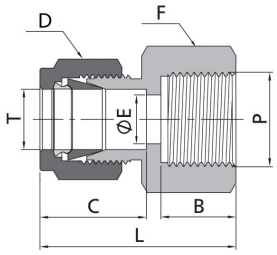

Metric Tube to Metric Thread

T-Tube O.D. (mm)	P-Metric Size	Basic Ordering Number	Dimension,in(mm)					
			L	B	C	E	D	F
6	M10 x 1	-FC-MT6-FM10	32.7(1.29)	11.0(0.43)	15.3(0.60)	4.0(0.16)	14.0(0.55)	16.0(0.63)
6	M14 x 1.5	-FC-MT6-FM14	34.2(1.35)	13.0(0.51)	15.3(0.60)	4.8(0.19)	14.0(0.55)	19.0(0.75)
6	M20 x 1.5	-FC-MT6-FM20	37.7(1.48)	16.0(0.63)	15.3(0.60)	4.8(0.19)	14.0(0.55)	27.0(1.06)
8	M8 x 1	-FC-MT8-FM8	31.6(1.24)	9.0(0.35)	16.2(0.64)	3.2(0.13)	16.0(0.63)	14.0(0.55)
8	M10 x 1	-FC-MT8-FM10	33.6(1.32)	11.0(0.43)	16.2(0.64)	4.0(0.16)	16.0(0.63)	16.0(0.63)
8	M14 x 1.5	-FC-MT8-FM14	35.6(1.40)	13.0(0.51)	16.2(0.64)	6.0(0.24)	16.0(0.63)	19.0(0.75)
8	M20 x 1.5	-FC-MT8-FM20	38.6(1.52)	16.0(0.63)	16.2(0.64)	6.4(0.25)	16.0(0.63)	27.0(1.06)
10	M16 x 1.5	-FC-MT10-FM16	38.1(1.50)	14.0(0.55)	17.2(0.68)	7.9(0.31)	19.0(0.75)	22.0(0.87)
12	M20 x 1.5	-FC-MT12-FM20	44.9(1.77)	16.0(0.63)	22.8(0.90)	9.5(0.37)	22.0(0.87)	27.0(1.06)
14	M10 x 1	-FC-MT14-FM10	42.5(1.67)	11.0(0.43)	24.4(0.96)	4.0(0.16)	25.0(0.98)	24.0(0.94)
14	M20 x 1.5	-FC-MT14-FM20	44.9(1.77)	16.0(0.63)	24.4(0.96)	10.8(0.43)	25.0(0.98)	27.0(1.06)
14	M22 x 1.5	-FC-MT14-FM22	45.9(1.81)	17.0(0.67)	24.4(0.96)	11.1(0.44)	25.0(0.98)	27.0(1.06)
16	M20 x 1.5	-FC-MT16-FM20	44.9(1.77)	16.0(0.63)	24.4(0.96)	10.8(0.43)	26.0(1.02)	27.0(1.06)
20	M20 x 1.5	-FC-MT20-FM20	46.5(1.83)	16.0(0.63)	26.0(1.02)	10.8(0.43)	32.0(1.26)	30.0(1.18)
25	M27 x 2	-FC-MT25-FM27	54.4(2.14)	18.0(0.71)	31.3(1.23)	16.1(0.63)	38.0(1.50)	35.0(1.38)

Bulkhead Unions

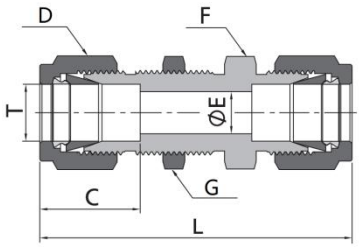

Fractional Tube

T-Tube O.D. (in.)	Basic Ordering Number	Dimension,in(mm)						Panel Hole Size in. (mm)	Max. Panel Thickness in. (mm)
		L	C	E	D	F	G		
1/16	-BU-FT1	1.24(31.5)	0.34(8.6)	0.05(1.3)	0.31(7.9)	0.31(7.9)	0.31(7.9)	0.20(5.2)	0.12(3.0)
1/8	-BU-FT2	2.02(51.3)	0.50(12.7)	0.09(2.3)	0.44(11.1)	0.50(12.7)	0.50(12.7)	0.33(8.3)	0.50(12.7)
3/16	-BU-FT3	2.11(53.6)	0.54(13.7)	0.12(3.0)	0.50(12.7)	0.56(14.3)	0.56(14.3)	0.39(9.9)	0.50(12.7)
1/4	-BU-FT4	2.27(57.7)	0.60(15.2)	0.19(4.8)	0.56(14.3)	0.63(15.9)	0.63(15.9)	0.45(11.5)	0.40(10.2)
5/16	-BU-FT5	2.39(60.7)	0.64(16.3)	0.25(6.4)	0.63(15.9)	0.69(17.5)	0.69(17.5)	0.52(13.1)	0.44(11.2)
3/8	-BU-FT6	2.45(62.2)	0.66(16.8)	0.28(7.1)	0.69(17.5)	0.75(19.1)	0.75(19.1)	0.58(14.7)	0.44(11.2)
1/2	-BU-FT8	2.80(71.1)	0.90(22.9)	0.41(10.4)	0.87(22.2)	0.94(23.8)	0.94(23.8)	0.76(19.4)	0.50(12.7)
5/8	-BU-FT10	2.86(72.6)	0.96(24.4)	0.50(12.7)	1.00(25.4)	1.06(27.0)	1.06(27.0)	0.89(22.6)	0.50(12.7)
3/4	-BU-FT12	3.11(79.0)	0.96(24.4)	0.62(15.7)	1.13(28.6)	1.19(30.2)	1.19(30.2)	1.02(25.8)	0.66(16.8)
7/8	-BU-FT14	3.33(84.6)	1.02(25.9)	0.72(18.3)	1.25(31.8)	1.31(33.3)	1.37(34.9)	1.14(29.0)	0.75(19.1)
1	-BU-FT16	3.77(95.8)	1.23(31.2)	0.88(22.4)	1.50(38.1)	1.63(41.3)	1.63(41.3)	1.33(33.7)	0.75(19.1)
1 1/4	-BU-FT20	4.85(123.2)	1.62(41.1)	1.09(27.8)	1.87(47.6)	1.87(47.6)	1.87(47.6)	1.64(41.7)	0.75(19.1)
1 1/2	-BU-FT24	5.48(139.2)	1.97(50.0)	1.34(34.0)	2.25(57.2)	2.25(57.2)	2.25(57.2)	1.95(49.6)	0.75(19.1)

Metric Tube

T-Tube O.D. (mm)	Basic Ordering Number	Dimension,mm(in)						Panel Hole Size in. (mm)	Max. Panel Thickness in. (mm)
		L	C	E	D	F	G		
3	-BU-MT3	51.3(2.02)	12.9(0.51)	2.4(0.09)	12.0(0.47)	14.0(0.55)	14.0(0.55)	8.3(0.33)	12.7(0.50)
4	-BU-MT4	53.6(2.11)	13.7(0.54)	2.4(0.09)	12.0(0.47)	14.0(0.55)	14.0(0.55)	9.9(0.39)	12.7(0.50)
6	-BU-MT6	57.7(2.27)	15.3(0.60)	4.8(0.19)	14.0(0.55)	16.0(0.63)	16.0(0.63)	11.5(0.45)	10.2(0.40)
8	-BU-MT8	61.0(2.40)	16.2(0.64)	6.4(0.25)	16.0(0.63)	18.0(0.71)	18.0(0.71)	13.1(0.52)	11.2(0.44)
10	-BU-MT10	63.7(2.51)	17.2(0.68)	7.9(0.31)	19.0(0.75)	22.0(0.87)	22.0(0.87)	16.3(0.64)	11.2(0.44)
12	-BU-MT12	71.0(2.80)	22.8(0.90)	9.5(0.37)	22.0(0.87)	24.0(0.94)	24.0(0.94)	19.5(0.77)	12.7(0.50)
14	-BU-MT14	72.5(2.85)	24.4(0.96)	11.1(0.44)	25.0(0.98)	27.0(1.06)	27.0(1.06)	22.5(0.89)	12.7(0.50)
15	-BU-MT15	72.5(2.85)	24.4(0.96)	11.9(0.47)	25.0(0.98)	27.0(1.06)	27.0(1.06)	22.8(0.90)	12.7(0.50)
16	-BU-MT16	72.5(2.85)	24.4(0.96)	12.7(0.50)	25.0(0.98)	27.0(1.06)	27.0(1.06)	22.8(0.90)	12.7(0.50)
18	-BU-MT18	78.9(3.11)	24.4(0.96)	15.1(0.59)	30.0(1.18)	30.0(1.18)	30.0(1.18)	26.0(1.02)	16.8(0.66)
20	-BU-MT20	84.5(3.33)	26.0(1.02)	15.9(0.63)	32.0(1.26)	35.0(1.38)	35.0(1.38)	29.0(1.14)	19.0(0.75)
25	-BU-MT25	96.0(3.78)	31.3(1.23)	21.8(0.86)	38.0(1.50)	41.0(1.61)	41.0(1.61)	34.0(1.34)	19.0(0.75)
30	-BU-MT30	124.0(4.88)	39.6(1.56)	26.2(1.03)	50.0(1.97)	50.0(1.97)	50.0(1.97)	40.5(1.59)	19.0(0.75)
32	-BU-MT32	128.0(5.04)	42.0(1.65)	28.6(1.13)	50.0(1.97)	50.0(1.97)	50.0(1.97)	42.5(1.67)	19.0(0.75)
38	-BU-MT38	145.0(5.71)	49.4(1.94)	33.7(1.33)	60.0(2.36)	60.0(2.36)	60.0(2.36)	50.5(1.99)	19.0(0.75)

Bulkhead Reducing Unions

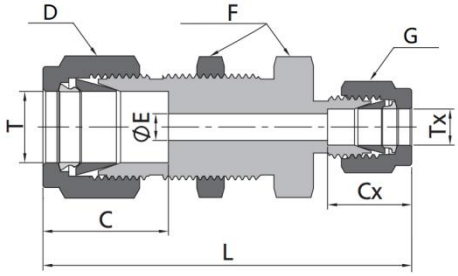

Fractional Tube

T-Tube O.D. (in.)	Tx-Tube O.D. (in.)	Basic Ordering Number	Dimension,in(mm)							Panel Hole Size in. (mm)	Max. Panel Thickness in. (mm)
			L	C	E	D	F	Cx	G		
1/4	1/8	-BRU-FT4-FT2	2.17(55.1)	0.60(15.2)	0.09(2.3)	0.56(14.3)	0.63(15.9)	0.50(12.7)	0.44(11.1)	0.45(11.5)	0.40(10.2)
3/8	1/4	-BRU-FT6-FT4	2.39(60.7)	0.66(16.8)	0.19(4.8)	0.69(17.5)	0.75(19.1)	0.60(15.2)	0.56(14.3)	0.58(14.7)	0.44(11.2)
1/2	1/4	-BRU-FT8-FT4	2.63(66.8)	0.90(22.9)	0.19(4.8)	0.87(22.2)	0.94(23.8)	0.60(15.2)	0.56(14.3)	0.76(19.4)	0.50(12.7)

Metric Tube

T-Tube O.D. (mm)	Tx-Tube O.D. (mm)	Basic Ordering Number	Dimension,mm(in.)							Panel Hole Size in. (mm)	Max. Panel Thickness in. (mm)
			L	C	E	D	F	Cx	G		
6	3	-BRU-MT6-MT3	55.1(2.17)	15.3(0.60)	2.4(0.09)	14.0(0.55)	16.0(0.63)	12.9(0.51)	12.0(0.47)	11.5(0.45)	10.2(0.40)
8	6	-BRU-MT8-MT6	60.1(2.37)	16.2(0.64)	4.8(0.19)	16.0(0.63)	18.0(0.71)	15.3(0.60)	14.0(0.55)	13.1(0.52)	11.2(0.44)
12	8	-BRU-MT12-MT8	67.6(2.66)	22.8(0.90)	6.4(0.25)	22.0(0.87)	24.0(0.94)	16.2(0.64)	16.0(0.63)	19.5(0.77)	12.7(0.50)

Bulkhead Flared Connector

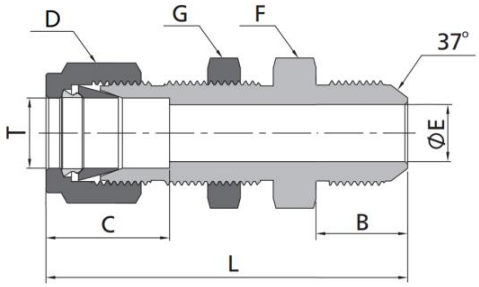

Fractional Tube to 37° Flared

T-Tube O.D. (in.)	Tube Flared Size	Basic Ordering Number	Dimension,in(mm)							Panel Hole Size in. (mm)	Max. Panel Thickness in. (mm)
			L	B	C	E	D	F	G		
1/8	1/8	-BMC-FT2-AN2	1.91(48.5)	0.45(11.4)	0.50(12.7)	0.06(1.5)	0.44(11.1)	0.50(12.7)	0.50(12.7)	0.33(8.3)	0.50(12.7)
1/8	1/4	-BMC-FT2-AN4	2.04(51.8)	0.55(14.0)	0.50(12.7)	0.09(2.3)	0.44(11.1)	0.63(15.9)	0.63(15.9)	0.33(8.3)	0.51(12.7)
3/16	3/16	-BMC-FT3-AN3	1.98(50.3)	0.48(12.2)	0.54(13.7)	0.09(2.3)	0.50(12.7)	0.56(14.3)	0.56(14.3)	0.39(9.9)	0.50(12.7)
1/4	1/4	-BMC-FT4-AN4	2.12(53.8)	0.55(14.0)	0.60(15.2)	0.17(4.3)	0.56(14.3)	0.63(15.9)	0.63(15.9)	0.45(11.5)	0.40(10.2)
5/16	5/16	-BMC-FT5-AN5	2.21(56.1)	0.55(14.0)	0.64(16.2)	0.23(5.8)	0.63(15.9)	0.69(17.5)	0.69(17.5)	0.52(13.1)	0.56(14.3)
3/8	1/4	-BMC-FT6-AN4	2.25(57.2)	0.55(14.0)	0.66(16.8)	0.17(4.3)	0.69(17.5)	0.75(19.1)	0.75(19.1)	0.58(14.7)	0.44(11.2)
3/8	3/8	-BMC-FT6-AN6	2.25(57.2)	0.56(14.2)	0.66(16.8)	0.28(7.1)	0.69(17.5)	0.75(19.1)	0.75(19.1)	0.58(14.7)	0.44(11.2)
1/2	1/2	-BMC-FT8-AN8	2.59(65.8)	0.66(16.8)	0.90(22.8)	0.39(9.9)	0.87(22.2)	0.94(23.8)	0.94(23.8)	0.76(19.4)	0.50(12.7)
5/8	5/8	-BMC-FT10-AN10	2.74(69.6)	0.76(19.3)	0.96(24.4)	0.48(12.3)	1.00(25.4)	1.06(27.0)	1.06(27.0)	0.89(22.6)	0.59(15.1)
3/4	3/4	-BMC-FT12-AN12	3.11(79.0)	0.86(21.8)	0.96(24.4)	0.61(15.5)	1.13(28.6)	1.19(30.2)	1.19(30.2)	1.02(25.8)	0.66(16.8)
1	1	-BMC-FT16-AN16	3.64(92.5)	0.91(23.1)	1.23(31.2)	0.84(21.3)	1.50(38.1)	1.63(41.3)	1.63(41.3)	1.33(33.7)	0.75(19.1)

Bulkhead Male Connector

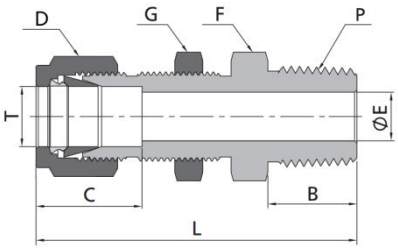

Fractional Tube to NPT Thread

T-Tube O.D. (in.)	P-NPT Size	Basic Ordering Number	Dimension,in(mm)							Panel Hole Size in. (mm)	Max. Panel Thickness in. (mm)
			L	B	C	E	D	F	G		
1/16	1/16	-BMC-FT1-MN1	1.19(30.2)	0.38(9.7)	0.34(8.6)	0.05(1.3)	0.31(7.9)	0.31(7.9)	0.31(7.9)	0.20(5.2)	0.25(6.4)
1/16	1/8	-BMC-FT1-MN2	1.27(32.3)	0.38(9.7)	0.34(8.6)	0.05(1.3)	0.31(7.9)	0.44(11.1)	0.31(7.9)	0.20(5.2)	0.25(6.4)
1/8	1/8	-BMC-FT2-MN2	1.83(46.5)	0.38(9.7)	0.50(12.7)	0.09(2.3)	0.44(11.1)	0.50(12.7)	0.50(12.7)	0.33(8.3)	0.50(12.7)
3/16	1/8	-BMC-FT3-MN2	1.89(48.0)	0.38(9.7)	0.54(13.7)	0.12(3.0)	0.50(12.7)	0.56(14.3)	0.56(14.3)	0.39(9.9)	0.50(12.7)
1/4	1/8	-BMC-FT4-MN2	1.95(49.5)	0.38(9.7)	0.60(15.2)	0.19(4.8)	0.56(14.3)	0.63(15.9)	0.63(15.9)	0.45(11.5)	0.40(10.2)
1/4	1/4	-BMC-FT4-MN4	2.13(54.1)	0.56(14.2)	0.60(15.2)	0.19(4.8)	0.56(14.3)	0.63(15.9)	0.63(15.9)	0.45(11.5)	0.40(10.2)
1/4	3/8	-BMC-FT4-MN6	2.16(54.9)	0.56(14.2)	0.60(15.2)	0.19(4.8)	0.56(14.3)	0.69(17.5)	0.69(17.5)	0.45(11.5)	0.40(10.2)
1/4	1/2	-BMC-FT4-MN8	2.37(60.3)	0.75(19.1)	0.60(15.2)	0.19(4.8)	0.56(14.3)	0.87(22.2)	0.87(22.2)	0.45(11.5)	0.40(10.2)
5/16	1/8	-BMC-FT5-MN2	2.08(52.8)	0.38(9.7)	0.64(16.3)	0.19(4.8)	0.63(15.9)	0.69(17.5)	0.69(17.5)	0.52(13.1)	0.44(11.2)
5/16	1/4	-BMC-FT5-MN4	2.27(57.7)	0.56(14.2)	0.64(16.3)	0.25(6.4)	0.63(15.9)	0.69(17.5)	0.69(17.5)	0.52(13.1)	0.44(11.2)
3/8	1/8	-BMC-FT6-MN2	2.08(52.9)	0.38(9.7)	0.66(16.8)	0.19(4.8)	0.69(17.5)	0.75(19.1)	0.75(19.1)	0.58(14.7)	0.44(11.2)
3/8	1/4	-BMC-FT6-MN4	2.26(57.4)	0.56(14.2)	0.66(16.8)	0.28(7.1)	0.69(17.5)	0.75(19.1)	0.75(19.1)	0.58(14.7)	0.44(11.2)
3/8	3/8	-BMC-FT6-MN6	2.26(57.4)	0.56(14.2)	0.66(16.8)	0.28(7.1)	0.69(17.5)	0.75(19.1)	0.75(19.1)	0.58(14.7)	0.44(11.2)
3/8	1/2	-BMC-FT6-MN8	2.51(63.8)	0.75(19.1)	0.66(16.8)	0.28(7.1)	0.69(17.5)	0.87(22.2)	0.87(22.2)	0.58(14.7)	0.44(11.2)
1/2	1/8	-BMC-FT8-MN2	2.31(58.7)	0.38(9.7)	0.90(22.9)	0.19(4.8)	0.87(22.2)	0.94(23.8)	0.94(23.8)	0.76(19.4)	0.50(12.7)
1/2	1/4	-BMC-FT8-MN4	2.49(63.2)	0.56(14.2)	0.90(22.9)	0.28(7.1)	0.87(22.2)	0.94(23.8)	0.94(23.8)	0.76(19.4)	0.50(12.7)
1/2	3/8	-BMC-FT8-MN6	2.49(63.2)	0.56(14.2)	0.90(22.9)	0.38(9.7)	0.87(22.0)	0.94(23.8)	0.94(23.8)	0.76(19.4)	0.50(12.7)
1/2	1/2	-BMC-FT8-MN8	2.71(68.8)	0.75(19.1)	0.90(22.9)	0.41(10.4)	0.87(22.0)	0.94(23.8)	0.94(23.8)	0.76(19.4)	0.50(12.7)
5/8	3/8	-BMC-FT10-MN6	2.63(66.7)	0.56(14.2)	0.96(24.4)	0.38(9.7)	1.00(25.4)	1.06(27.0)	1.06(27.0)	0.89(22.6)	0.59(15.1)
5/8	1/2	-BMC-FT10-MN8	2.81(71.5)	0.75(19.1)	0.96(24.4)	0.47(11.9)	1.00(25.4)	1.06(27.0)	1.06(27.0)	0.89(22.6)	0.59(15.1)
3/4	1/2	-BMC-FT12-MN8	3.00(76.2)	0.75(19.1)	0.96(24.4)	0.47(11.9)	1.13(28.6)	1.19(30.2)	1.19(30.2)	1.02(25.8)	0.66(16.8)
3/4	3/4	-BMC-FT12-MN12	3.00(76.2)	0.75(19.1)	0.96(24.4)	0.62(15.7)	1.13(28.6)	1.19(30.2)	1.19(30.2)	1.02(25.8)	0.66(16.8)
7/8	3/4	-BMC-FT14-MN12	3.31(84.1)	0.75(19.1)	1.02(25.9)	0.62(15.7)	1.25(31.8)	1.31(33.3)	1.31(33.3)	1.14(29.0)	0.75(19.1)
1	3/4	-BMC-FT16-MN12	3.48(88.4)	0.75(19.1)	1.23(31.2)	0.62(15.7)	1.50(38.1)	1.63(41.3)	1.63(41.3)	1.33(33.7)	0.75(19.1)
1	1	-BMC-FT16-MN16	3.67(93.2)	0.94(23.9)	1.23(31.2)	0.88(22.4)	1.50(38.1)	1.63(41.3)	1.63(41.3)	1.33(33.7)	0.75(19.1)

Metric Tube to NPT Thread

T-Tube O.D. (mm.)	P-NPT Size	Basic Ordering Number	Dimension, mm. (in.)							Panel Hole Size in. (mm)	Max. Panel Thickness in. (mm)
			L	B	C	E	D	F	G		
6	1/8	-BMC-MT6-NS2	49.6(1.95)	9.7(0.38)	15.3(0.60)	4.8(0.19)	14.0(0.55)	16.0(0.63)	16.0(0.63)	11.5(0.45)	10.2(0.40)
6	1/4	-BMC-MT6-NS4	53.6(2.11)	14.2(0.56)	15.3(0.60)	4.8(0.19)	14.0(0.55)	16.0(0.63)	16.0(0.63)	11.5(0.45)	10.2(0.40)
8	1/8	-BMC-MT8-NS2	52.3(2.06)	9.7(0.38)	16.2(0.64)	4.8(0.19)	16.0(0.63)	18.0(0.71)	18.0(0.71)	13.1(0.52)	11.2(0.44)
8	1/4	-BMC-MT8-NS4	57.5(2.26)	14.2(0.56)	16.2(0.64)	6.4(0.25)	16.0(0.63)	18.0(0.71)	18.0(0.71)	13.1(0.52)	11.2(0.44)
10	1/4	-BMC-MT10-NS4	58.4(2.30)	14.2(0.56)	17.2(0.68)	7.9(0.31)	19.0(0.75)	22.0(0.87)	22.0(0.87)	16.3(0.64)	11.2(0.44)
10	3/8	-BMC-MT10-NS6	58.4(2.30)	14.2(0.56)	17.2(0.68)	7.9(0.31)	19.0(0.75)	22.0(0.87)	22.0(0.87)	16.3(0.64)	11.2(0.44)
10	1/2	-BMC-MT10-NS8	63.1(2.48)	19.1(0.75)	17.2(0.68)	7.9(0.31)	19.0(0.75)	22.0(0.87)	22.0(0.87)	16.3(0.64)	11.2(0.44)
12	1/4	-BMC-MT12-NS4	63.9(2.52)	14.2(0.56)	22.8(0.90)	7.9(0.31)	22.0(0.87)	24.0(0.94)	24.0(0.94)	19.5(0.77)	12.7(0.50)
12	3/8	-BMC-MT12-NS6	63.9(2.52)	14.2(0.56)	22.8(0.90)	9.5(0.37)	22.0(0.87)	24.0(0.94)	24.0(0.94)	19.5(0.77)	12.7(0.50)
12	1/2	-BMC-MT12-NS8	68.8(2.71)	19.1(0.75)	22.8(0.90)	9.5(0.37)	22.0(0.87)	24.0(0.94)	24.0(0.94)	19.5(0.77)	12.7(0.50)

Bulkhead Female Connector

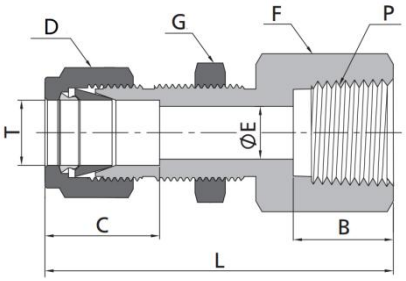

Fractional Tube to NPT Thread

T-Tube O.D. (in.)	P-NPT Size	Basic Ordering Number	Dimension,in(mm)							Panel Hole Size in. (mm)	Max. Panel Thickness in. (mm)
			L	B	C	E	D	F	G		
1/16	1/16	-BFC-FT1-FN1	1.03(26.2)	0.39(9.9)	0.34(8.6)	0.05(1.3)	0.31(7.9)	0.44(11.1)	0.31(7.9)	0.20(5.2)	0.13(3.2)
1/16	1/8	-BFC-FT1-FN2	1.06(26.9)	0.41(10.4)	0.34(8.6)	0.05(1.3)	0.31(7.9)	0.56(14.3)	0.31(7.9)	0.20(5.2)	0.13(3.2)
1/8	1/8	-BFC-FT2-FN2	1.76(44.7)	0.41(10.4)	0.50(12.7)	0.09(2.3)	0.44(11.1)	0.56(14.3)	0.50(12.7)	0.33(8.3)	0.50(12.7)
1/8	1/4	-BFC-FT2-FN4	1.95(49.6)	0.59(15.0)	0.50(12.7)	0.09(2.3)	0.44(11.1)	0.75(19.1)	0.50(12.7)	0.33(8.3)	0.50(12.7)
3/16	1/8	-BFC-FT3-FN2	1.79(45.5)	0.41(10.4)	0.54(13.7)	0.12(3.0)	0.50(12.7)	0.56(14.3)	0.56(14.3)	0.39(9.9)	0.50(12.7)
1/4	1/8	-BFC-FT4-FN2	1.85(47.0)	0.41(10.4)	0.60(15.2)	0.19(4.8)	0.56(14.3)	0.63(15.9)	0.63(15.9)	0.45(11.5)	0.40(10.2)
1/4	1/4	-BFC-FT4-FN4	2.04(51.8)	0.59(15.0)	0.60(15.2)	0.19(4.8)	0.56(14.3)	0.75(19.1)	0.63(15.9)	0.45(11.5)	0.40(10.2)
1/4	3/8	-BFC-FT4-FN6	2.10(53.3)	0.59(15.0)	0.60(15.2)	0.19(4.8)	0.56(14.3)	0.87(22.2)	0.63(15.9)	0.45(11.5)	0.40(10.2)
1/4	1/2	-BFC-FT4-FN8	2.29(58.2)	0.78(19.8)	0.60(15.2)	0.19(4.8)	0.56(14.3)	1.06(27.0)	0.63(15.9)	0.45(11.5)	0.40(10.2)
5/16	1/8	-BFC-FT5-FN2	1.96(49.8)	0.41(10.4)	0.64(16.3)	0.25(6.4)	0.63(15.9)	0.56(14.3)	0.69(17.5)	0.52(13.1)	0.44(11.2)
5/16	1/4	-BFC-FT5-FN4	2.38(60.5)	0.59(15.0)	0.64(16.3)	0.25(6.4)	0.63(15.9)	0.75(19.1)	0.69(17.5)	0.52(13.1)	0.44(11.2)
3/8	1/8	-BFC-FT6-FN2	1.98(50.3)	0.41(10.4)	0.66(16.8)	0.28(7.1)	0.69(17.5)	0.63(15.9)	0.75(19.1)	0.58(14.7)	0.44(11.2)
3/8	1/4	-BFC-FT6-FN4	2.17(55.1)	0.59(15.0)	0.66(16.8)	0.28(7.1)	0.69(17.5)	0.75(19.1)	0.75(19.1)	0.58(14.7)	0.44(11.2)
3/8	3/8	-BFC-FT6-FN6	2.23(56.6)	0.59(15.0)	0.66(16.8)	0.28(7.1)	0.69(17.5)	0.87(22.2)	0.75(19.1)	0.58(14.7)	0.44(11.2)
3/8	1/2	-BFC-FT6-FN8	2.42(61.5)	0.78(19.8)	0.66(16.8)	0.28(7.1)	0.69(17.5)	1.06(27.0)	0.75(19.1)	0.58(14.7)	0.44(11.2)
3/8	3/4	-BFC-FT6-FN12	2.57(65.3)	0.81(20.6)	0.66(16.8)	0.28(7.1)	0.69(17.5)	1.31(33.3)	0.75(19.1)	0.58(14.7)	0.44(11.2)
1/2	1/4	-BFC-FT8-FN4	2.37(60.2)	0.59(15.0)	0.90(22.9)	0.41(10.4)	0.87(22.2)	0.94(23.8)	0.94(23.8)	0.76(19.4)	0.50(12.7)
1/2	3/8	-BFC-FT8-FN6	2.43(61.7)	0.59(15.0)	0.90(22.9)	0.41(10.4)	0.87(22.2)	0.94(23.8)	0.94(23.8)	0.76(19.4)	0.50(12.7)
1/2	1/2	-BFC-FT8-FN8	2.62(66.5)	0.78(19.8)	0.90(22.9)	0.41(10.4)	0.87(22.2)	1.06(27.0)	0.94(23.8)	0.76(19.4)	0.50(12.7)
1/2	3/4	-BFC-FT8-FN12	2.68(68.1)	0.81(20.6)	0.90(22.9)	0.41(10.4)	0.87(22.2)	1.31(33.3)	0.94(23.8)	0.76(19.4)	0.50(12.7)
5/8	3/8	-BFC-FT10-FN6	2.46(62.5)	0.59(15.0)	0.96(24.4)	0.50(12.7)	1.00(25.4)	0.94(23.8)	1.06(27.0)	0.89(22.6)	0.59(15.1)
5/8	1/2	-BFC-FT10-FN8	2.65(67.3)	0.78(19.8)	0.96(24.4)	0.50(12.7)	1.00(25.4)	1.06(27.0)	1.06(27.0)	0.89(22.6)	0.59(15.1)
3/4	1/2	-BFC-FT12-FN8	2.84(72.2)	0.78(19.8)	0.96(24.4)	0.62(15.7)	1.13(28.6)	1.06(27.0)	1.19(30.2)	1.02(25.8)	0.78(19.8)
3/4	3/4	-BFC-FT12-FN12	2.90(73.7)	0.81(20.6)	0.96(24.4)	0.62(15.7)	1.13(28.6)	1.31(33.3)	1.19(30.2)	1.02(25.8)	0.78(19.8)
7/8	3/4	-BFC-FT14-FN12	3.18(80.8)	0.81(20.6)	1.02(25.9)	0.72(18.3)	1.25(31.8)	1.31(33.3)	1.31(33.3)	1.14(29.0)	0.94(23.8)
1	3/4	-BFC-FT16-FN12	3.33(84.7)	0.81(20.6)	1.23(31.2)	0.88(22.4)	1.50(38.1)	1.63(41.3)	1.63(41.3)	1.33(33.7)	0.94(23.8)
1	1	-BFC-FT16-FN16	3.68(93.5)	1.00(25.4)	1.23(31.2)	0.88(22.4)	1.50(38.1)	1.63(41.3)	1.63(41.3)	1.33(33.7)	0.94(23.8)

Metric Tube to NPT Thread

T-Tube O.D. (mm.)	P-NPT Size	Basic Ordering Number	Dimension, mm. (in.)							Panel Hole Size in. (mm)	Max. Panel Thickness in. (mm)
			L	B	C	E	D	F	G		
6	1/8	-BFC-MT6-FN2	47.2(1.86)	10.4(0.41)	15.3(0.60)	4.8(0.19)	14.0(0.55)	16.0(0.63)	16.0(0.63)	11.5(0.45)	10.2(0.40)
6	1/4	-BFC-MT6-FN4	51.8(2.04)	15.0(0.59)	15.3(0.60)	4.8(0.19)	14.0(0.55)	19.0(0.75)	16.0(0.63)	11.5(0.45)	10.2(0.40)
8	1/8	-BFC-MT8-FN2	49.6(1.95)	10.4(0.41)	16.2(0.64)	4.8(0.19)	16.0(0.63)	18.0(0.71)	18.0(0.71)	13.1(0.52)	11.2(0.44)
10	1/4	-BFC-MT10-FN4	55.2(2.17)	15.0(0.59)	17.2(0.68)	7.9(0.31)	19.0(0.75)	22.0(0.87)	22.0(0.87)	16.3(0.64)	11.2(0.44)
12	3/8	-BFC-MT12-FN6	60.9(2.40)	15.0(0.59)	22.8(0.90)	9.5(0.37)	22.0(0.87)	24.0(0.94)	24.0(0.94)	19.5(0.77)	12.7(0.50)
12	1/2	-BFC-MT12-FN8	66.5(2.62)	19.8(0.78)	22.8(0.90)	9.5(0.37)	22.0(0.87)	24.0(0.94)	24.0(0.94)	19.5(0.77)	12.7(0.50)

Union Elbows

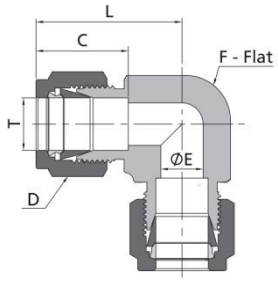

Fractional Tube

T-Tube O.D. (in.)	Basic Ordering Number	Dimension,in(mm)				
		L	C	D	F	E
1/16	-UE-FT1	0.70(17.8)	0.34(8.6)	0.31(7.9)	0.37(9.5)	0.05(1.3)
1/8	-UE-FT2	0.88(22.4)	0.50(12.7)	0.44(11.1)	0.37(9.5)	0.09(2.3)
3/16	-UE-FT3	1.00(25.4)	0.54(13.7)	0.50(12.7)	0.50(12.7)	0.12(3.0)
1/4	-UE-FT4	1.06(26.9)	0.60(15.2)	0.56(14.3)	0.50(12.7)	0.19(4.8)
5/16	-UE-FT5	1.13(28.7)	0.64(16.3)	0.63(15.9)	0.56(14.3)	0.25(6.4)
3/8	-UE-FT6	1.20(30.5)	0.66(16.8)	0.69(17.5)	0.63(15.9)	0.28(7.1)
1/2	-UE-FT8	1.42(36.1)	0.90(22.9)	0.87(22.2)	0.81(20.6)	0.41(10.4)
5/8	-UE-FT10	1.50(38.1)	0.96(24.4)	1.00(25.4)	0.94(23.8)	0.5(12.7)
3/4	-UE-FT12	1.57(39.9)	0.96(24.4)	1.13(28.6)	1.06(27.0)	0.62(15.7)
7/8	-UE-FT14	1.76(44.7)	1.02(25.9)	1.25(31.8)	1.37(34.9)	0.72(18.3)
1	-UE-FT16	1.93(49.0)	1.23(31.2)	1.50(38.1)	1.37(34.9)	0.88(22.4)
1 1/8	-UE-FT18	2.17(55.1)	1.23(31.2)	1.63(41.3)	1.69(42.9)	0.97(24.6)
1 1/4	-UE-FT20	2.62(66.5)	1.62(41.1)	1.87(47.6)	1.69(42.9)	1.09(27.7)
1 1/2	-UE-FT24	3.07(78.0)	1.97(50.0)	2.25(57.2)	2.00(50.8)	1.34(34.0)

Metric Tube

T-Tube O.D. (mm)	Basic Ordering Number	Dimension,mm(in.)				
		L	C	D	F	E
3	-UE-MT3	22.3(0.88)	12.9(0.51)	12.0(0.47)	9.5(0.37)	2.4(0.09)
4	-UE-MT4	25.4(1.00)	13.7(0.54)	12.0(0.47)	12.7(0.50)	2.4(0.09)
6	-UE-MT6	27.0(1.06)	15.3(0.60)	14.0(0.55)	12.7(0.50)	4.8(0.19)
8	-UE-MT8	28.8(1.13)	16.2(0.64)	16.0(0.63)	14.3(0.56)	6.4(0.25)
10	-UE-MT10	31.5(1.24)	17.2(0.68)	19.0(0.75)	17.5(0.69)	7.9(0.31)
12	-UE-MT12	36.0(1.42)	22.8(0.90)	22.0(0.87)	20.6(0.81)	9.5(0.37)
14	-UE-MT14	38.0(1.50)	24.4(0.96)	25.0(0.98)	23.8(0.94)	11.0(0.43)
15	-UE-MT15	38.8(1.53)	24.4(0.96)	25.0(0.98)	23.8(0.94)	11.9(0.47)
16	-UE-MT16	38.0(1.50)	24.4(0.96)	25.0(0.98)	23.8(0.94)	12.7(0.50)
18	-UE-MT18	39.8(1.57)	24.4(0.96)	30.0(1.18)	27.0(1.06)	15.1(0.59)
20	-UE-MT20	44.6(1.76)	26.0(1.02)	32.0(1.26)	34.9(1.37)	15.9(0.63)
22	-UE-MT22	44.6(1.76)	26.0(1.02)	32.0(1.26)	34.9(1.37)	18.3(0.72)
25	-UE-MT25	49.1(1.93)	31.3(1.23)	38.0(1.5)	34.9(1.37)	21.8(0.86)
28	-UE-MT28	64.0(2.52)	36.6(1.44)	46.0(1.81)	42.9(1.69)	21.8(0.86)
30	-UE-MT30	69.9(2.75)	39.6(1.56)	50.0(1.97)	42.9(1.69)	26.2(1.03)
32	-UE-MT32	72.3(2.85)	42.0(1.65)	50.0(1.97)	42.9(1.69)	28.6(1.13)
38	-UE-MT38	84.0(3.31)	49.4(1.94)	60.0(2.36)	50.8(2.00)	33.7(1.33)

Union Reducing Elbows

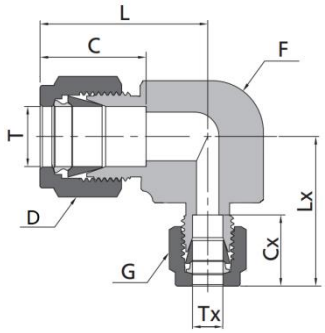

Fractional Tube

T-Tube O.D. (in.)	Tx-Tube O.D. (in.)	Basic Ordering Number	Dimension,in(mm)						
			L	C	D	F	Cx	G	Lx
3/16	1/8	-URE-FT3-FT2	1.00(25.4)	0.54(13.7)	0.50(12.7)	0.50(12.7)	0.50(12.7)	0.44(11.1)	0.97(24.7)
1/4	1/8	-URE-FT4-FT2	1.06(26.9)	0.60(15.2)	0.56(14.3)	0.50(12.7)	0.50(12.7)	0.44(11.1)	1.00(25.4)
5/16	1/8	-URE-FT5-FT2	1.17(29.7)	0.64(16.3)	0.63(15.9)	0.56(14.3)	0.50(12.7)	0.44(11.1)	1.04(26.4)
5/16	1/4	-URE-FT5-FT4	1.17(29.7)	0.64(16.3)	0.63(15.9)	0.56(14.3)	0.60(15.2)	0.56(14.3)	1.14(29.0)
3/8	1/8	-URE-FT6-FT2	1.20(30.5)	0.66(16.8)	0.69(17.5)	0.63(15.9)	0.50(12.7)	0.44(11.1)	1.04(26.4)
3/8	1/4	-URE-FT6-FT4	1.20(30.5)	0.66(16.8)	0.69(17.5)	0.63(15.9)	0.60(15.2)	0.56(14.3)	1.14(29.0)
3/8	5/16	-URE-FT6-FT5	1.20(30.5)	0.66(16.8)	0.69(17.5)	0.63(15.9)	0.64(16.3)	0.63(15.9)	1.17(29.7)
1/2	1/4	-URE-FT8-FT4	1.42(36.1)	0.90(22.9)	0.87(22.2)	0.81(20.6)	0.60(15.2)	0.56(14.3)	1.27(32.2)
1/2	5/16	-URE-FT8-FT5	1.42(36.1)	0.90(22.9)	0.87(22.2)	0.81(20.6)	0.64(16.3)	0.63(15.9)	1.28(32.5)
1/2	3/8	-URE-FT8-FT6	1.42(36.1)	0.90(22.9)	0.87(22.2)	0.81(20.6)	0.66(16.8)	0.69(17.5)	1.32(33.6)
5/8	3/8	-URE-FT10-FT6	1.50(38.1)	0.96(24.4)	1.00(25.4)	0.94(23.8)	0.66(16.8)	0.69(17.5)	1.40(35.6)
5/8	1/2	-URE-FT10-FT8	1.50(38.1)	0.96(24.4)	1.00(25.4)	0.94(23.8)	0.90(22.9)	0.87(22.2)	1.50(38.1)
3/4	1/4	-URE-FT12-FT4	1.57(39.9)	0.96(24.4)	1.13(28.6)	1.06(27.0)	0.60(15.2)	0.56(14.3)	1.41(35.9)
3/4	3/8	-URE-FT12-FT6	1.57(39.9)	0.96(24.4)	1.13(28.6)	1.06(27.0)	0.66(16.8)	0.69(17.5)	1.47(37.4)
3/4	1/2	-URE-FT12-FT8	1.57(39.9)	0.96(24.4)	1.13(28.6)	1.06(27.0)	0.90(22.9)	0.87(22.2)	1.57(39.9)
7/8	1/4	-URE-FT14-FT4	1.76(44.7)	1.02(25.9)	1.25(31.8)	1.37(34.9)	0.60(15.2)	0.56(14.3)	1.60(40.7)
1	1/2	-URE-FT16-FT8	1.93(49.0)	1.23(31.2)	1.50(38.1)	1.37(34.9)	0.90(22.9)	0.87(22.2)	1.75(44.4)
1	3/4	-URE-FT16-FT12	1.93(49.0)	1.23(31.2)	1.50(38.1)	1.37(34.9)	0.96(24.4)	1.13(28.6)	1.75(44.4)

Metric Tube

T-Tube O.D. (mm)	Tx-Tube O.D. (mm)	Basic Ordering Number	Dimension,mm(in.)						
			L	C	D	F	Cx	G	Lx
8	6	-URE-MT8-MT6	28.8(1.13)	16.2(0.64)	16.0(0.63)	14.3(0.56)	15.3(0.60)	14.0(0.55)	27.9(1.10)
10	8	-URE-MT10-MT8	31.5(1.24)	17.2(0.68)	19.0(0.75)	17.5(0.69)	16.2(0.64)	16.0(0.63)	30.5(1.20)
12	8	-URE-MT12-MT8	36.0(1.42)	22.8(0.90)	22.0(0.87)	20.6(0.81)	16.2(0.64)	16.0(0.63)	32.6(1.28)
14	8	-URE-MT14-MT8	38.8(1.53)	24.4(0.96)	25.0(0.98)	23.8(0.94)	16.2(0.64)	16.0(0.63)	35.4(1.39)
14	10	-URE-MT14-MT10	38.8(1.53)	24.4(0.96)	25.0(0.98)	23.8(0.94)	17.2(0.68)	19.0(0.75)	36.4(1.43)
18	12	-URE-MT18-MT12	39.9(1.57)	24.4(0.96)	30.0(1.18)	27.0(1.06)	22.8(0.90)	22.0(0.87)	38.8(1.53)
22	12	-URE-MT22-MT12	44.7(1.76)	26.0(1.02)	32.0(1.26)	34.9(1.37)	22.8(0.90)	22.0(0.87)	39.8(1.57)
25	18	-URE-MT25-MT20	49.0(1.93)	31.2(1.23)	38.0(1.5)	34.9(1.37)	24.4(0.96)	30.0(1.18)	44.4(1.75)

Male Elbows

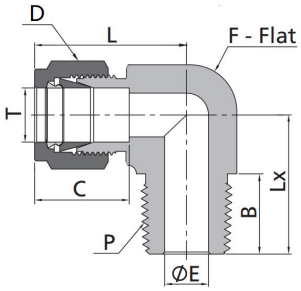

Fractional Tube to NPT Thread

T-Tube O.D.(in.)	P-NPT SIZE	Basic Ordering Number	Dimension,in(mm)						
			L	C	D	F	E	B	Lx
1/16	1/16	-ME-FT1-MN1	0.75(19.1)	0.34(8.6)	0.31(7.9)	0.44(11.1)	0.05(1.3)	0.38(9.7)	0.70(17.8)
1/16	1/8	-ME-FT1-MN2	0.75(19.1)	0.34(8.6)	0.31(7.9)	0.44(11.1)	0.05(1.3)	0.38(9.7)	0.70(17.8)
1/8	1/16	-ME-FT2-MN1	0.93(23.6)	0.50(12.7)	0.44(11.1)	0.44(11.1)	0.09(2.4)	0.38(9.7)	0.70(17.8)
1/8	1/8	-ME-FT2-MN2	0.93(23.6)	0.50(12.7)	0.44(11.1)	0.44(11.1)	0.09(2.4)	0.38(9.7)	0.70(17.8)
1/8	1/4	-ME-FT2-MN4	0.97(24.6)	0.50(12.7)	0.44(11.1)	0.50(12.7)	0.09(2.4)	0.56(14.2)	0.92(23.4)
3/16	1/8	-ME-FT3-MN2	1.00(25.4)	0.54(13.7)	0.50(12.7)	0.50(12.7)	0.12(3.0)	0.38(9.7)	0.74(18.8)
3/16	1/4	-ME-FT3-MN4	1.00(25.4)	0.54(13.7)	0.50(12.7)	0.50(12.7)	0.12(3.0)	0.56(14.2)	0.92(23.4)
1/4	1/8	-ME-FT4-MN2	1.06(26.9)	0.60(15.2)	0.56(14.3)	0.50(12.7)	0.19(4.8)	0.38(9.7)	0.74(18.8)
1/4	1/4	-ME-FT4-MN4	1.06(26.9)	0.60(15.2)	0.56(14.3)	0.50(12.7)	0.19(4.8)	0.56(14.2)	0.92(23.4)
1/4	3/8	-ME-FT4-MN6	1.17(29.7)	0.60(15.2)	0.56(14.3)	0.69(17.5)	0.19(4.8)	0.56(14.2)	1.03(26.2)
5/16	1/4	-ME-FT5-MN4	1.13(28.7)	0.64(16.3)	0.63(15.9)	0.56(14.3)	0.25(6.4)	0.56(14.2)	0.96(24.4)
5/16	3/8	-ME-FT5-MN6	1.20(30.5)	0.64(16.3)	0.63(15.9)	0.69(17.5)	0.25(6.4)	0.56(14.2)	1.03(26.2)
3/8	1/4	-ME-FT6-MN4	1.20(30.5)	0.66(16.8)	0.69(17.5)	0.63(15.9)	0.28(7.1)	0.56(14.2)	1.00(25.4)
3/8	3/8	-ME-FT6-MN6	1.23(31.2)	0.66(16.8)	0.69(17.5)	0.69(17.5)	0.28(7.1)	0.56(14.2)	1.03(26.2)
3/8	1/2	-ME-FT6-MN8	1.31(33.3)	0.66(16.8)	0.69(17.5)	0.81(20.6)	0.28(7.1)	0.75(19.1)	1.30(33.0)
1/2	1/4	-ME-FT8-MN4	1.42(36.1)	0.90(22.9)	0.87(22.2)	0.81(20.6)	0.28(7.1)	0.56(14.2)	1.11(28.2)
1/2	3/8	-ME-FT8-MN6	1.42(36.1)	0.90(22.9)	0.87(22.2)	0.81(20.6)	0.38(9.7)	0.56(14.2)	1.11(28.2)
1/2	1/2	-ME-FT8-MN8	1.42(36.1)	0.90(22.9)	0.87(22.2)	0.81(20.6)	0.41(10.4)	0.75(19.1)	1.30(33.0)
1/2	3/4	-ME-FT8-MN12	1.57(39.9)	0.90(22.9)	0.87(22.2)	1.06(27.0)	0.41(10.4)	0.75(19.1)	1.45(36.8)
5/8	3/8	-ME-FT10-MN6	1.50(38.1)	0.96(24.4)	1.00(25.4)	0.94(23.8)	0.38(9.7)	0.56(14.2)	1.19(30.2)
5/8	1/2	-ME-FT10-MN8	1.50(38.1)	0.96(24.4)	1.00(25.4)	0.94(23.8)	0.47(11.9)	0.75(19.1)	1.38(35.1)
5/8	3/4	-ME-FT10-MN12	1.57(39.9)	0.96(24.4)	1.00(25.4)	1.06(27.0)	0.50(12.7)	0.75(19.1)	1.45(36.8)
3/4	1/2	-ME-FT12-MN8	1.57(39.9)	0.96(24.4)	1.13(28.6)	1.06(27.0)	0.47(11.9)	0.75(19.1)	1.45(36.8)
3/4	3/4	-ME-FT12-MN12	1.57(39.9)	0.96(24.4)	1.13(28.6)	1.06(27.0)	0.62(15.7)	0.75(19.1)	1.45(36.8)
7/8	3/4	-ME-FT14-MN12	1.76(44.7)	1.02(25.9)	1.25(31.8)	1.37(34.9)	0.62(15.7)	0.75(19.1)	1.64(41.7)
1	3/4	-ME-FT16-MN12	1.93(49.0)	1.23(31.2)	1.50(38.1)	1.37(34.9)	0.62(15.7)	0.75(19.1)	1.64(41.7)
1	1	-ME-FT16-MN16	1.93(49.0)	1.23(31.2)	1.50(38.1)	1.37(34.9)	0.88(22.4)	0.94(23.9)	1.83(46.5)
1 1/4	1 1/4	-ME-FT20-MN20	2.62(66.5)	1.62(41.1)	1.87(47.6)	1.69(42.9)	1.09(27.7)	0.94(23.9)	2.06(52.4)
1 1/2	1 1/2	-ME-FT24-MN24	3.07(78.0)	1.97(50.0)	2.25(57.2)	2.00(50.8)	1.34(34.0)	1.03(26.2)	2.38(60.5)

Fractional Tube to RT Thread

T-Tube O.D.(in.)	P-RT SIZE	Basic Ordering Number	Dimension,in(mm)						
			L	C	D	F	E	B	Lx
1/8	1/8	-ME-FT2-RT2	0.93(23.6)	0.50(12.7)	0.44(11.1)	0.44(11.1)	0.09(2.4)	0.38(9.7)	0.70(17.8)
1/8	1/4	-ME-FT2-RT4	0.97(24.6)	0.50(12.7)	0.44(11.1)	0.50(12.7)	0.09(2.4)	0.56(14.2)	0.92(23.4)
1/4	1/4	ME-FT4-RT4	1.06(26.9)	0.60(15.2)	0.56(14.3)	0.50(12.7)	0.19(4.8)	0.56(14.2)	0.92(23.4)
1/4	3/8	--ME-FT4-RT6	1.17(29.7)	0.60(15.2)	0.56(14.3)	0.69(17.5)	0.19(4.8)	0.56(14.2)	1.03(26.2)
5/16	1/4	ME-FT5-RT4	1.13(28.7)	0.64(16.3)	0.63(15.9)	0.56(14.3)	0.25(6.4)	0.56(14.2)	0.96(24.4)
3/8	1/4	-ME-FT6-RT4	1.20(30.5)	0.66(16.8)	0.69(17.5)	0.63(15.9)	0.28(7.1)	0.56(14.2)	1.00(25.4)
3/8	3/8	-ME-FT6-RT6	1.23(31.2)	0.66(16.8)	0.69(17.5)	0.69(17.5)	0.28(7.1)	0.56(14.2)	1.03(26.2)
1/2	3/8	-ME-FT8-RT6	1.42(36.1)	0.90(22.9)	0.87(22.2)	0.81(20.6)	0.38(9.7)	0.56(14.2)	1.10(27.9)
1/2	1/2	-ME-FT8-RT8	1.42(36.1)	0.90(22.9)	0.87(22.2)	0.81(20.6)	0.41(10.4)	0.75(19.1)	1.30(33.0)
3/4	1/2	-ME-FT12-RT8	1.57(39.9)	0.96(24.4)	1.13(28.6)	1.06(27.0)	0.47(11.9)	0.75(19.1)	1.45(36.8)
1	1	-ME-FT16-RT16	1.93(49.0)	1.23(31.2)	1.50(38.1)	1.37(34.9)	0.88(22.4)	0.94(23.9)	1.83(46.5)

Male Elbows

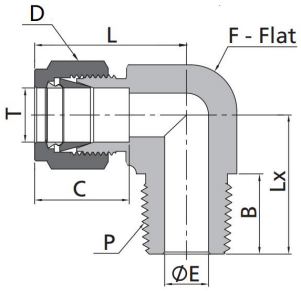

Metric Tube to NPT Thread

T-Tube O.D.(mm)	P-RT SIZE	Basic Ordering Number	Dimension,mm(in)						
			L	C	D	F	E	B	Lx
3	1/8	-ME-MT3-MN2	23.6(0.93)	12.9(0.51)	12.0(0.47)	11.1(0.44)	2.4(0.09)	9.7(0.38)	17.8(0.70)
3	1/4	-ME-MT3-MN4	24.6(0.97)	12.9(0.51)	12.0(0.47)	12.7(0.50)	2.4(0.09)	14.2(0.56)	23.4(0.92)
4	1/8	-ME-MT4-MN2	25.4(1.00)	13.7(0.54)	12.0(0.47)	12.7(0.50)	2.4(0.09)	9.7(0.38)	18.8(0.74)
4	1/4	-ME-MT4-MN4	25.4(1.00)	13.7(0.54)	12.0(0.47)	12.7(0.50)	2.4(0.09)	14.2(0.56)	23.4(0.92)
6	1/8	-ME-MT6-MN2	27.0(1.06)	15.3(0.60)	14.0(0.55)	12.7(0.50)	4.8(0.19)	9.7(0.38)	18.8(0.74)
6	1/4	-ME-MT6-MN4	27.0(1.06)	15.3(0.60)	14.0(0.55)	12.7(0.50)	4.8(0.19)	14.2(0.56)	23.4(0.92)
8	1/4	-ME-MT8-MN4	28.8(1.13)	16.2(0.64)	16.0(0.63)	14.3(0.56)	6.4(0.25)	14.2(0.56)	24.4(0.96)
8	3/8	-ME-MT8-MN6	30.6(1.20)	16.2(0.64)	16.0(0.63)	17.5(0.69)	6.4(0.25)	14.2(0.56)	26.2(1.03)
10	1/4	-ME-MT10-MN4	31.5(1.24)	17.2(0.68)	19.0(0.75)	17.5(0.69)	7.1(0.28)	14.2(0.56)	26.2(1.03)
10	3/8	-ME-MT10-MN6	31.5(1.24)	17.2(0.68)	19.0(0.75)	17.5(0.69)	7.9(0.31)	14.2(0.56)	26.2(1.03)
10	1/2	-ME-MT10-MN8	33.5(1.32)	17.2(0.68)	19.0(0.75)	20.6(0.81)	7.9(0.31)	19.1(0.75)	33.0(1.30)
12	3/8	-ME-MT12-MN6	36.0(1.42)	22.8(0.90)	22.0(0.87)	20.6(0.81)	9.5(0.37)	14.2(0.56)	28.2(1.11)
12	1/2	-ME-MT12-MN8	36.0(1.42)	22.8(0.90)	22.0(0.87)	20.6(0.81)	9.5(0.37)	19.1(0.75)	33.0(1.30)
15	1/2	-ME-MT15-MN8	38.0(1.50)	24.4(0.96)	25.0(0.98)	23.8(0.94)	11.9(0.47)	19.1(0.75)	35.1(1.38)
16	1/2	-ME-MT16-MN8	38.0(1.50)	24.4(0.96)	25.0(0.98)	23.8(0.94)	11.9(0.47)	19.1(0.75)	35.1(1.38)
16	3/4	-ME-MT16-MN12	39.8(1.57)	24.4(0.96)	25.0(0.98)	27.0(1.06)	12.7(0.50)	19.1(0.75)	36.8(1.45)
18	1/2	-ME-MT18-MN8	39.8(1.57)	24.4(0.96)	30.0(1.18)	27.0(1.06)	11.9(0.47)	19.1(0.75)	36.8(1.45)
18	3/4	-ME-MT18-MN12	39.8(1.57)	24.4(0.96)	30.0(1.18)	27.0(1.06)	15.1(0.59)	19.1(0.75)	36.8(1.45)
20	1/2	-ME-MT20-MN8	44.6(1.76)	26.0(1.02)	32.0(1.26)	34.9(1.37)	11.9(0.47)	19.1(0.75)	41.7(1.64)
20	3/4	-ME-MT20-MN12	44.6(1.76)	26.0(1.02)	32.0(1.26)	34.9(1.37)	15.9(0.63)	19.1(0.75)	41.7(1.64)
22	3/4	-ME-MT22-MN12	44.6(1.76)	26.0(1.02)	32.0(1.26)	34.9(1.37)	15.9(0.63)	19.1(0.75)	41.7(1.64)
22	1	-ME-MT22-MN16	44.6(1.76)	26.0(1.02)	32.0(1.26)	34.9(1.37)	18.3(0.72)	23.9(0.94)	46.5(1.83)
25	1	-ME-MT25-MN16	49.1(1.93)	31.3(1.23)	38.0(1.50)	34.9(1.37)	21.8(0.86)	23.9(0.94)	46.5(1.83)
30	1 1/4	-ME-MT30-MN20	69.9(2.75)	39.6(1.56)	50.0(1.97)	42.9(1.69)	26.2(1.03)	23.9(0.94)	53.1(2.09)
32	1 1/4	-ME-MT32-MN20	72.3(2.85)	42.0(1.65)	50.0(1.97)	42.9(1.69)	27.8(1.09)	23.9(0.94)	53.1(2.09)
38	1 1/2	-ME-MT38-MN24	84.0(3.31)	49.4(1.94)	60.0(2.36)	50.8(2.00)	33.7(1.33)	26.2(1.03)	60.4(2.38)

Metric Tube to RT Thread

T-Tube O.D.(mm)	P-RT SIZE	Basic Ordering Number	Dimension,mm (in)						
			L	C	D	F	E	B	Lx
3	1/8	-ME-MT3-RT2	23.6(0.93)	12.9(0.51)	12.0(0.47)	11.1(0.44)	2.4(0.09)	9.7(0.38)	17.8(0.70)
4	1/8	-ME-MT4-RT2	25.4(1.00)	13.7(0.54)	12.0(0.47)	12.7(0.50)	2.4(0.09)	9.7(0.38)	18.8(0.74)
6	1/4	--ME-MT6-RT4	27.0(1.06)	15.3(0.60)	14.0(0.55)	12.7(0.50)	4.8(0.19)	14.2(0.56)	23.4(0.92)
8	1/4	-ME-MT8-RT4	28.8(1.13)	16.2(0.64)	16.0(0.63)	14.3(0.56)	6.4(0.25)	14.2(0.56)	24.4(0.96)
10	3/8	-ME-MT10-RT6	31.5(1.24)	17.2(0.68)	19.0(0.75)	17.5(0.69)	7.9(0.31)	14.2(0.56)	26.2(1.03)
12	3/8	-ME-MT12-RT6	36.0(1.42)	22.8(0.90)	22.0(0.87)	20.6(0.81)	9.5(0.37)	14.2(0.56)	28.2(1.11)
12	1/2	-ME-MT12-RT8	36.0(1.42)	22.8(0.90)	22.0(0.87)	20.6(0.81)	0.5(0.02)	19.1(0.75)	33.0(1.30)
15	1/2	-ME-MT15-RT8	38.1(1.50)	24.4(0.90)	25.0(0.98)	23.8(0.94)	11.9(0.47)	19.1(0.75)	35.1(1.38)
16	1/2	-ME-MT16-RT8	38.0(1.50)	24.4(0.90)	25.0(0.98)	23.8(0.94)	11.9(0.47)	19.1(0.75)	35.1(1.38)
18	1/2	-ME-MT18-RT8	39.8(1.57)	24.4(0.90)	30.0(1.18)	27.0(1.06)	11.9(0.47)	19.1(0.75)	36.8(1.45)
20	3/4	-ME-MT20-RT12	44.6(1.76)	26.0(0.90)	32.0(1.26)	34.9(1.37)	15.9(0.63)	19.1(0.75)	41.7(1.64)
22	3/4	-ME-MT22-RT12	44.6(1.76)	26.0(0.90)	32.0(1.26)	34.9(1.37)	15.9(0.63)	19.1(0.75)	41.7(1.64)
25	1	-ME-MT25-RT16	49.1(1.93)	31.3(0.90)	38.0(1.50)	34.9(1.37)	21.8(0.86)	23.9(0.94)	46.5(1.83)
28	1	-ME-MT28-RT16	64.0(2.52)	36.6(0.90)	46.0(1.81)	42.9(1.69)	21.8(0.86)	23.9(0.94)	53.1(2.09)

45° Male Elbows

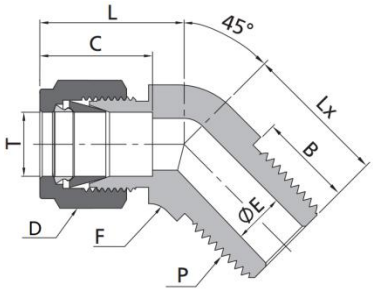

Fractional Tube to NPT Thread

T-Tube O.D.(in.)	P-NPT SIZE	Basic Ordering Number	Dimension,in(mm)						
			L	C	D	F	E	B	Lx
1/16	1/16	-MV-FT1-MN1	0.62(15.7)	0.34(8.6)	0.31(7.9)	0.37(9.5)	0.05(1.3)	0.38(9.7)	0.57(14.5)
1/8	1/8	-MV-FT2-MN2	0.82(20.8)	0.50(12.7)	0.44(11.1)	0.44(11.1)	0.09(2.3)	0.38(9.7)	0.66(16.8)
3/16	1/8	-MV-FT3-MN2	0.85(21.6)	0.54(13.7)	0.50(12.7)	0.44(11.1)	0.12(3.0)	0.38(9.7)	0.58(14.7)
1/4	1/8	-MV-FT4-MN2	0.97(24.6)	0.60(15.2)	0.56(14.3)	0.50(12.7)	0.19(4.8)	0.38(9.7)	0.65(16.5)
1/4	1/4	-MV-FT4-MN4	0.97(24.6)	0.60(15.2)	0.56(14.3)	0.50(12.7)	0.19(4.8)	0.56(14.2)	0.83(21.1)
5/16	1/8	-MV-FT5-MN2	1.03(26.1)	0.64(16.3)	0.63(15.9)	0.56(14.3)	0.19(4.8)	0.38(9.7)	0.66(16.8)
3/8	1/8	-MV-FT6-MN2	1.10(27.9)	0.66(16.8)	0.69(17.5)	0.63(15.9)	0.19(4.8)	0.38(9.7)	0.72(18.3)
3/8	1/4	-MV-FT6-MN4	1.10(27.9)	0.66(16.8)	0.69(17.5)	0.63(15.9)	0.28(7.1)	0.56(14.2)	0.90(22.9)
3/8	3/8	-MV-FT6-MN6	1.15(29.2)	0.66(16.8)	0.69(17.5)	0.81(20.6)	0.28(7.1)	0.75(19.1)	0.95(24.1)
1/2	3/8	-MV-FTL8-MN6	1.26(32.0)	0.90(22.9)	0.87(22.2)	0.81(20.6)	0.38(9.7)	0.75(19.1)	0.95(24.1)
5/8	1/2	-V-FT10-MN8	1.21(30.7)	0.96(24.4)	1.00(25.4)	0.94(23.8)	0.47(11.9)	0.75(19.1)	1.17(29.7)
3/4	3/4	--MV-FT12-MN12	1.34(34.0)	0.96(24.4)	1.13(28.6)	1.06(27.0)	0.62(15.7)	0.75(19.1)	1.22(31.0)
7/8	3/4	-MV-FT14-MN12	1.59(40.4)	1.02(25.9)	1.25(31.8)	1.25(31.8)	0.62(15.7)	0.75(19.1)	1.27(32.3)
1	1	-MV-FT16-MN16	1.59(40.4)	1.23(31.2)	1.50(38.1)	1.37(34.9)	0.88(22.4)	0.94(23.9)	1.49(37.8)

Metric Tube to NPT Thread

T-Tube O.D.(mm)	P-NPT SIZE	Basic Ordering Number	Dimension,mm(in)						
			L	C	D	F	E	B	Lx
6	1/8	-MV-MT6-MN2	23.4(0.92)	15.3(0.60)	14.0(0.55)	12.7(0.50)	4.8(0.19)	9.7(0.38)	16.8(0.66)
6	1/4	-MV-MT6-MN4	23.4(0.92)	15.3(0.60)	14.0(0.55)	12.7(0.50)	4.8(0.19)	14.2(0.56)	21.8(0.86)
8	1/8	-MV-MT8-MN2	24.3(0.96)	16.2(0.64)	16.0(0.63)	15.9(0.63)	4.8(0.19)	9.7(0.38)	16.8(0.66)
10	1/4	-MV-MT10-MN4	26.6(1.05)	17.2(0.68)	19.0(0.75)	17.5(0.69)	7.9(0.31)	14.2(0.56)	24.1(0.95)
12	3/8	-MV-MT12-MN6	29.1(1.15)	22.8(0.90)	22.0(0.87)	20.6(0.81)	9.5(0.37)	19.1(0.75)	24.1(0.95)
12	1/2	-MV-MT12-MN8	30.7(1.21)	22.8(0.90)	22.0(0.87)	20.6(0.81)	9.5(0.37)	19.1(0.75)	29.7(1.17)
16	1/2	-MV-MT16-MN8	30.7(1.21)	24.4(0.96)	25.0(0.98)	23.8(0.94)	11.9(0.47)	19.1(0.75)	29.7(1.17)
18	3/4	--MV-MT18-MN12	34.0(1.34)	24.4(0.96)	30.0(1.18)	27.0(1.06)	15.1(0.59)	19.1(0.75)	1.22(31.0)
22	3/4	-MV-MT22-MN12	40.4(1.59)	26.0(1.02)	32.0(1.26)	34.9(1.37)	15.9(0.63)	19.1(0.75)	32.3(1.27)
25	1	-MV-MT25-MN16	40.4(1.59)	31.3(1.23)	38.0(1.50)	34.9(1.37)	21.8(0.86)	23.9(0.94)	37.8(1.49)

Ajusteble Male Elbows

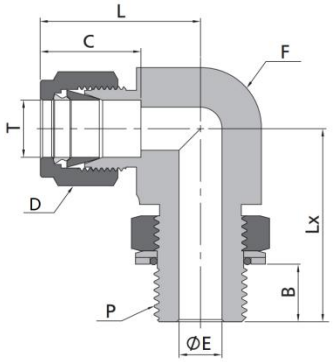

Fractional Tube to SAE/MS Thread

T-Tube O.D.(in.)	P-SAE/MS SIZE	Basic Ordering Number	Dimension,in(mm)						
			L	B	C	D	E	F	Lx
1/4	7/16-20	-AME-FT4-ST7	1.12(28.4)	0.39(9.9)	0.60(15.2)	0.56(14.3)	0.19(4.8)	0.50(12.7)	1.12(28.4)
1/4	9/16-18	-AME-FT4-ST9	1.20(30.5)	0.44(11.2)	0.60(15.2)	0.56(14.3)	0.19(4.8)	0.63(15.9)	1.27(32.3)
5/16	1/2-20	-AME-FT5-ST8	1.19(30.2)	0.39(9.9)	0.64(16.3)	0.63(15.9)	0.23(5.8)	0.56(14.3)	1.16(29.5)
3/8	7/16-20	-AME-FT6-ST7	1.31(33.3)	0.39(9.9)	0.66(16.8)	0.69(17.5)	0.20(5.1)	0.63(15.9)	1.24(31.5)
3/8	9/16-18	-AME-FT6-ST9	1.26(32.0)	0.44(11.2)	0.66(16.8)	0.69(17.5)	0.28(7.1)	0.63(15.9)	1.27(32.3)
3/8	3/4-16	-AME-FT6-ST12	1.37(34.8)	0.50(12.7)	0.66(16.8)	0.69(17.5)	0.28(7.1)	0.81(20.6)	1.49(37.8)
1/2	9/16-18	-AME-FT8-ST9	1.48(37.6)	0.44(11.2)	0.90(22.9)	0.87(22.2)	0.28(7.1)	0.81(20.6)	1.48(37.5)
1/2	3/4-16	-AME-FT8-ST12	1.48(37.6)	0.50(12.7)	0.90(22.9)	0.87(22.2)	0.41(10.4)	0.81(20.6)	1.49(37.8)
5/8	7/8-14	-AME-FT10-ST14	1.56(39.6)	0.56(14.2)	0.96(24.4)	1.00(25.4)	0.50(12.7)	0.94(23.8)	1.71(43.4)
3/4	1 1/16-12	-AME-FT12-ST17	1.63(41.4)	0.66(16.8)	0.96(24.4)	1.13(28.6)	0.62(15.7)	1.06(27.0)	1.92(48.8)
7/8	1 3/16-12	-AME-FT14-ST19	1.70(43.2)	0.66(16.8)	1.02(25.9)	1.25(31.8)	0.72(18.3)	1.19(30.2)	1.99(50.5)
1	1 5/16-12	-AME-FT16-ST21	1.99(50.5)	0.66(16.8)	1.23(31.2)	1.50(38.1)	0.88(22.4)	1.37(34.9)	2.11(53.6)
1 1/4	1 5/8-12	-AME-FT20-ST26	2.67(67.8)	0.66(16.8)	1.62(41.1)	1.87(47.6)	1.09(27.7)	1.69(42.9)	2.29(58.2)
1 1/2	1 7/8-12	-AME-FT24-ST30	3.07(78.0)	0.66(16.8)	1.97(50.0)	2.25(57.2)	1.34(34.0)	2.00(50.8)	2.38(60.5)

Fractional Tube to ISO Parallel Thread

T-Tube O.D.(in.)	P-BSP SIZE	Basic Ordering Number	Dimension,in(mm)						
			L	B	C	D	E	F	Lx
1/4	1/8	-AME-FT4-PP2	1.06(26.9)	0.32(8.1)	0.60(15.2)	0.56(14.3)	0.16(4.1)	0.50(12.7)	1.04(26.4)
1/4	1/4	-AME-FT4-PP4	1.14(29.0)	0.36(9.1)	0.60(15.2)	0.56(14.3)	0.19(4.8)	0.63(15.9)	1.27(32.3)
3/8	1/4	-AME-FT6-PP4	1.20(30.5)	0.36(9.1)	0.66(16.8)	0.69(17.5)	0.23(5.8)	0.63(15.9)	1.27(32.3)
3/8	3/8	-AME-FT6-PP6	1.31(33.3)	0.37(9.4)	0.66(16.8)	0.69(17.5)	0.28(7.1)	0.81(20.6)	1.46(37.1)
1/2	1/4	-AME-FT8-PP4	1.42(36.1)	0.36(9.1)	0.90(22.9)	0.87(22.2)	0.23(5.8)	0.81(20.6)	1.38(35.1)
1/2	3/8	-AME-FT8-PP6	1.42(36.1)	0.37(9.4)	0.90(22.9)	0.87(22.2)	0.31(7.9)	0.81(20.6)	1.46(37.1)
1/2	1/2	-AME-FT8-PP8	1.50(38.1)	0.51(13.0)	0.90(22.9)	0.87(22.2)	0.41(10.4)	0.94(23.8)	1.71(43.4)
5/8	1/2	-AME-FT10-PP8	1.50(38.1)	0.51(13.0)	0.96(24.4)	1.00(25.4)	0.47(11.9)	0.94(23.8)	1.71(43.4)
3/4	1/2	-AME-FT12-PP8	1.57(39.9)	0.51(13.0)	0.96(24.4)	1.13(28.6)	0.47(11.9)	1.06(27.0)	1.78(45.2)
3/4	3/4	-AME-FT12-PP12	1.57(39.9)	0.51(13.0)	0.96(24.4)	1.13(28.6)	0.62(15.7)	1.06(27.0)	1.92(48.8)
1	3/4	-AME-FT16-PP12	1.93(49.0)	0.51(13.0)	1.23(31.2)	1.50(38.1)	0.62(15.7)	1.37(34.9)	2.10(53.3)
1	1	-AME-FT16-PP16	1.93(49.0)	0.55(14.0)	1.23(31.2)	1.50(38.1)	0.78(19.8)	1.37(34.9)	2.11(53.6)

Metric Tube to ISO Parallel Thread

T-Tube O.D.(mm)	P-BSP SIZE	Basic Ordering Number	Dimension,mm(in)						
			L	B	C	D	E	F	Lx
6	1/8	-AME-MT6-PP2	27.0(1.06)	8.1(0.32)	15.3(0.60)	14.0(0.55)	4.0(0.16)	12.7(0.50)	26.4(1.04)
6	1/4	-AME-MT6-PP4	29.0(1.14)	9.1(0.36)	15.3(0.60)	14.0(0.55)	4.8(0.19)	15.9(0.63)	32.3(1.27)
8	1/8	-AME-MT8-PP2	28.8(1.13)	8.1(0.32)	16.2(0.64)	16.0(0.63)	4.0(0.16)	14.3(0.56)	27.4(1.08)
8	1/4	-AME-MTL8-PP4	29.9(1.18)	9.1(0.36)	16.2(0.64)	16.0(0.63)	5.9(0.23)	15.9(0.63)	32.2(1.27)
10	1/4	-AME-MT10-PP4	33.5(1.32)	9.1(0.36)	17.2(0.68)	19.0(0.75)	5.9(0.23)	20.6(0.81)	35.0(1.38)
10	3/8	-AME-MT10-PP6	33.5(1.32)	9.4(0.37)	17.2(0.68)	19.0(0.75)	7.9(0.31)	20.6(0.81)	37.1(1.46)
12	1/4	-AME-MT12-PP4	36.0(1.42)	9.1(0.36)	22.8(0.90)	22.0(0.87)	5.9(0.23)	20.6(0.81)	35.0(1.38)
12	3/8	-AME-MT12-PP6	36.0(1.42)	9.4(0.37)	22.8(0.90)	22.0(0.87)	7.9(0.31)	20.6(0.81)	37.1(1.46)
12	1/2	-AME-MT12-PP8	38.0(1.50)	13.0(0.51)	22.8(0.90)	22.0(0.87)	9.5(0.37)	23.8(0.94)	43.4(1.71)
12	3/4	-AME-MT12-PP12	39.8(1.57)	13.0(0.51)	22.8(0.90)	22.0(0.87)	9.5(0.37)	27.0(1.06)	48.8(1.92)

45° Ajusteble Male Elbows

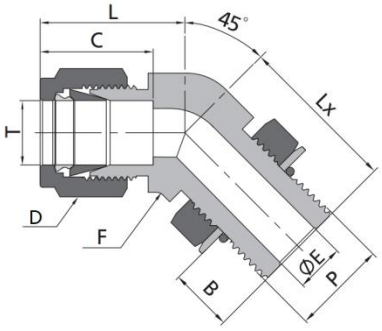

Fractional Tube to SAE/MS Thread

T-Tube O.D.(in.)	P-SAE/MS SIZE	Basic Ordering Number	Dimension,in(mm)						
			L	B	C	D	E	F	Lx
1/4	7/16-20	-AMV-FT4-ST7	1.01(25.7)	0.39(9.9)	0.60(15.2)	0.56(14.3)	0.19(4.8)	0.50(12.7)	1.01(25.7)
3/8	9/16-18	-AMV-FTC6-ST9	1.10(27.9)	0.44(11.2)	0.66(16.8)	0.69(17.5)	0.28(7.1)	0.63(15.9)	1.11(28.2)
1/2	3/4-16	-AMV-FT8-ST12	1.26(32.0)	0.50(12.7)	0.90(22.9)	0.87(22.2)	0.41(10.4)	0.81(20.6)	1.27(32.3)
3/4	1 1/16-12	-AMV-FT12-ST17	1.57(39.9)	0.66(16.8)	0.96(24.4)	1.13(28.6)	0.62(15.7)	1.06(27.0)	1.86(47.2)
1	1 5/16-12	-AMV-FT16-ST21	1.87(47.5)	0.66(16.8)	1.23(31.2)	1.50(38.1)	0.88(22.4)	1.37(34.9)	1.99(50.5)

Fractional Tube to ISO Parallel Thread

T-Tube O.D.(in.)	P-BSP SIZE	Basic Ordering Number	Dimension,in(mm)						
			L	B	C	D	E	F	Lx
1/4	1/8	-AMV-FT4-PP2	1.06(26.9)	0.32(8.1)	0.60(15.2)	0.56(14.3)	0.16(4.1)	0.50(12.7)	1.04(26.4)
3/8	1/4	-AMV-FT6-PP4	1.20(30.5)	0.36(9.1)	0.66(16.8)	0.69(17.5)	0.23(5.8)	0.63(15.9)	1.27(32.3)
1/2	1/2	-AMV-FT8-PP8	1.50(38.1)	0.51(13.0)	0.90(22.9)	0.87(22.2)	0.41(10.4)	0.94(23.8)	1.71(43.4)
3/4	3/4	-AMV-FT12-PP12	1.57(39.9)	0.51(13.0)	0.96(24.4)	1.13(28.6)	0.62(15.7)	1.06(27.0)	1.92(48.8)
1	1	-AMV-FT16-PP16	1.93(49.0)	0.55(14.0)	1.23(31.2)	1.50(38.1)	0.78(19.8)	1.37(34.9)	2.11(53.6)

Female Elbows

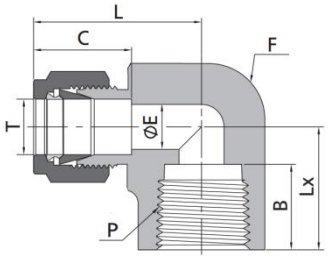

Fractional Tube to NPT Thread

T-Tube O.D.(in.)	P-NPT SIZE	Basic Ordering Number	Dimension,in(mm)						
			L	B	C	D	E	F	Lx
1/16	1/16	-FE-FT1-FN1	0.71(18.0)	0.39(9.9)	0.34(8.6)	0.31(7.9)	0.05(1.3)	0.44(11.1)	0.56(14.2)
1/16	1/8	-FE-FT1-FN2	0.81(20.6)	0.41(10.4)	0.34(8.6)	0.31(7.9)	0.05(1.3)	0.56(14.3)	0.75(19.1)
1/8	1/8	-FE-FT2-FN2	0.97(24.6)	0.41(10.4)	0.50(12.7)	0.44(11.1)	0.09(2.3)	0.56(14.3)	0.75(19.1)
1/8	1/4	-FE-FT2-FN4	1.08(27.4)	0.59(15.0)	0.50(12.7)	0.44(11.1)	0.09(2.3)	0.69(17.5)	0.88(22.4)
3/16	1/8	-FE-FT3-FN2	1.00(25.4)	0.41(10.4)	0.54(13.7)	0.50(12.7)	0.12(3.0)	0.5(12.7)	0.75(19.1)
1/4	1/8	-FE-FT4-FN2	1.06(26.9)	0.41(10.4)	0.60(15.2)	0.56(14.3)	0.19(4.8)	0.56(14.3)	0.75(19.1)
1/4	1/4	-FE-FT4-FN4	1.17(29.7)	0.59(15.0)	0.60(15.2)	0.56(14.3)	0.19(4.8)	0.69(17.5)	0.88(22.4)
1/4	3/8	-FE-FT4-FN6	1.25(31.8)	0.59(15.0)	0.60(15.2)	0.56(14.3)	0.19(4.8)	0.81(20.6)	0.88(22.4)
1/4	1/2	-FE-FT4-FN8	1.36(34.5)	0.78(19.8)	0.60(15.2)	0.56(14.3)	0.19(4.8)	1.00(25.4)	1.12(28.4)
5/16	1/8	-FE-FT-FN2	1.13(28.7)	0.41(10.4)	0.64(16.3)	0.63(15.9)	0.25(6.4)	0.56(14.3)	0.75(19.1)
5/16	1/4	-FE-FT5-FN4	1.20(30.5)	0.59(15.0)	0.64(16.3)	0.63(15.9)	0.25(6.4)	0.69(17.5)	0.88(22.4)
3/8	1/8	-FE-FT6-FN2	1.20(30.5)	0.41(10.4)	0.66(16.8)	0.69(17.5)	0.28(7.1)	0.63(15.9)	0.75(19.1)
3/8	1/4	-FE-FT6-FN4	1.23(31.2)	0.59(15.0)	0.66(16.8)	0.69(17.5)	0.28(7.1)	0.69(17.5)	0.88(22.4)
3/8	3/8	-FE-FT6-FN6	1.31(33.3)	0.59(15.0)	0.66(16.8)	0.69(17.5)	0.28(7.1)	0.81(20.6)	0.88(22.4)
3/8	1/2	-FE-FT6-FN8	1.42(36.1)	0.78(19.8)	0.66(16.8)	0.69(17.5)	0.28(7.1)	1.00(25.4)	1.12(28.4)
1/2	1/4	-FE-FT8-FN4	1.42(36.1)	0.59(15.0)	0.90(22.9)	0.87(22.2)	0.41(10.4)	0.81(20.6)	0.88(22.4)
1/2	3/8	-FE-FT8-FN6	1.42(36.1)	0.59(15.0)	0.90(22.9)	0.87(22.2)	0.41(10.4)	0.81(20.6)	0.88(22.4)
1/2	1/2	-FE-FT8-FN8	1.53(38.9)	0.78(19.8)	0.90(22.9)	0.87(22.2)	0.41(10.4)	1.00(25.4)	1.12(28.4)
5/8	3/8	-FE-FT10-FN6	1.50(38.1)	0.59(15.0)	0.96(24.4)	1.00(25.4)	0.50(12.7)	0.94(23.8)	0.88(22.4)
5/8	1/2	-FE-FT10-FN8	1.57(39.9)	0.78(19.8)	0.96(24.4)	1.00(25.4)	0.50(12.7)	1.06(27.0)	1.12(28.4)
3/4	1/2	-FE-FT12-FN8	1.57(39.9)	0.78(19.8)	0.96(24.4)	1.13(28.6)	0.62(15.7)	1.06(27.0)	1.12(28.4)
3/4	3/4	-FE-FT12-FN12	1.76(44.7)	0.81(20.6)	0.96(24.4)	1.13(28.6)	0.62(15.7)	1.37(34.9)	1.25(31.8)
7/8	3/4	-FE-FT14-FN12	1.76(44.7)	0.81(20.6)	1.02(25.9)	1.25(31.8)	0.72(18.3)	1.37(34.9)	1.25(31.8)
1	3/4	-FE-FN16-FN12	1.93(49.0)	0.81(20.6)	1.23(31.2)	1.50(38.1)	0.88(22.4)	1.37(34.9)	1.25(31.8)
1	1	-FE-FT6-FN16	2.11(53.6)	1.00(25.4)	1.23(31.2)	1.50(38.1)	0.88(22.4)	1.69(42.9)	1.50(38.1)

Metric Tube to NPT Thread

T-Tube O.D.(mm)	P-NPT SIZE	Basic Ordering Number	Dimension,mm(in)						
			L	B	C	D	E	F	Lx
6	1/8	-FE-MT6-FN2	27.0(1.06)	10.4(0.41)	15.3(0.60)	14.0(0.55)	4.8(0.19)	12.7(0.50)	19.0(0.75)
6	1/4	-FE-MT6-FN4	29.8(1.17)	15.0(0.59)	15.3(0.60)	14.0(0.55)	4.8(0.19)	17.5(0.69)	22.4(0.88)
8	1/8	-FE-MT8-FN2	28.8(1.13)	10.4(0.41)	16.2(0.64)	16.0(0.63)	4.8(0.19)	14.3(0.56)	19.1(0.75)
8	1/4	-FE-MT8-FN4	30.6(1.20)	15.0(0.59)	16.2(0.64)	16.0(0.63)	6.4(0.25)	17.5(0.69)	22.4(0.88)
10	1/4	-FE-MT10-FN4	33.5(1.32)	15.0(0.59)	17.2(0.68)	19.0(0.75)	7.9(0.31)	20.6(0.81)	22.4(0.88)
10	3/8	-FE-MT10-FN6	33.5(1.32)	15.0(0.59)	17.2(0.68)	19.0(0.75)	7.9(0.31)	20.6(0.81)	22.4(0.88)
10	1/2	-FE-MT10-FN8	36.6(1.44)	19.8(0.78)	17.2(0.68)	19.0(0.75)	7.9(0.31)	25.4(1.00)	28.5(1.12)
12	1/4	-FE-MT12-FN4	36.0(1.42)	15.0(0.59)	22.8(0.90)	22.0(0.87)	7.9(0.31)	20.6(0.81)	22.4(0.88)
12	3/8	-FE-MT12-FN6	36.0(1.42)	15.0(0.59)	22.8(0.90)	22.0(0.87)	9.5(0.37)	20.6(0.81)	22.4(0.88)
12	1/2	-FE-MT12-FN8	38.8(1.53)	19.8(0.78)	22.8(0.90)	22.0(0.87)	9.5(0.37)	25.4(1.00)	28.4(1.12)
16	3/8	-FE-MT16-FN6	39.5(1.56)	15.0(0.59)	24.4(0.96)	25.0(0.98)	9.5(0.37)	27.0(1.06)	23.6(0.93)
16	1/2	-FE-MT16-FN8	39.5(1.56)	19.8(0.78)	24.4(0.96)	25.0(0.98)	12.7(0.50)	27.0(1.06)	28.5(1.12)

Union Tees

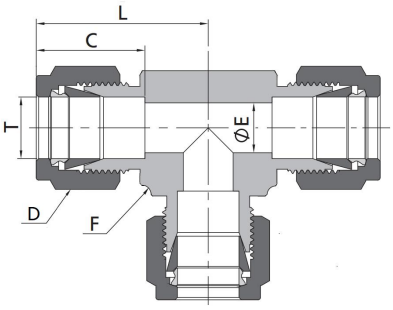

Fractional Tube

T-Tube O.D.(in.)	Basic Ordering Number	Dimension, in. (mm)				
		L	C	D	F	E
1/16	-UT-FT1	0.70(17.8)	0.34(8.6)	0.31(7.9)	0.37(9.5)	0.05(1.3)
1/8	-UT-FT2	0.96(24.4)	0.50(12.7)	0.44(11.1)	0.37(9.5)	0.09(2.3)
3/16	-UT-FT3	0.96(24.4)	0.54(13.7)	0.50(12.7)	0.44(11.1)	0.12(3.0)
1/4	-UT-FT4	1.06(26.9)	0.60(15.2)	0.56(14.3)	0.50(12.7)	0.19(4.8)
5/16	-UT-FT5	1.17(29.7)	0.64(16.2)	0.63(15.9)	0.63(15.9)	0.25(6.4)
3/8	-UT-FT6	1.20(30.5)	0.66(16.8)	0.69(17.5)	0.63(15.9)	0.28(7.1)
1/2	-UT-FT8	1.42(36.1)	0.90(22.9)	0.87(22.2)	0.81(20.6)	0.41(10.4)
5/8	-UT-FT10	1.53(38.9)	0.96(24.4)	1.00(25.4)	1.00(25.4)	0.50(12.7)
3/4	-UT-FT12	1.57(39.9)	0.96(24.4)	1.13(28.6)	1.06(27.0)	0.62(15.7)
7/8	-UT-FT14	1.76(44.7)	1.02(25.9)	1.25(31.8)	1.37(34.9)	0.72(18.3)
1	-UT-FT16	1.93(49.0)	1.23(31.2)	1.50(38.1)	1.37(34.9)	0.88(22.4)
1 1/8	-UT-FT18	2.17(55.1)	1.23(31.2)	1.81(46.0)	1.69(42.9)	0.97(24.6)
1 1/4	-UT-FT20	2.62(66.5)	1.62(41.1)	1.87(47.6)	1.69(42.9)	1.09(27.7)
1 1/2	-UT-FT24	3.07(78.0)	1.97(50.0)	2.25(57.2)	2.00(50.8)	1.34(34.0)

Metric Tube

T-Tube O.D.(mm)	Basic Ordering Number	Dimension,mm (in.)				
		L	C	D	F	E
2	-UT-MT2	22.3(0.88)	12.9(0.51)	12.0(0.47)	9.5(0.37)	1.7(0.07)
3	-UT-MT3	22.3(0.88)	12.9(0.51)	12.0(0.47)	9.5(0.37)	2.4(0.09)
4	-UT-MT4	25.4(1.00)	13.7(0.54)	12.0(0.47)	12.7(0.50)	2.4(0.09)
6	-UT-MT6	27.0(1.06)	15.3(0.60)	14.0(0.55)	12.7(0.50)	4.8(0.19)
8	-UT-MT8	29.9(1.18)	16.2(0.64)	16.0(0.63)	15.9(0.63)	6.4(0.25)
10	-UT-MT10	31.5(1.24)	17.2(0.68)	19.0(0.75)	17.5(0.69)	7.9(0.31)
12	-UT-MT12	36.0(1.42)	22.8(0.90)	22.0(0.87)	20.6(0.81)	9.5(0.37)
14	-UT-MT14	38.8(1.53)	24.4(0.96)	25.0(0.98)	25.4(1.00)	11.1(0.44)
15	-UT-MT15	38.8(1.53)	24.4(0.96)	25.0(0.98)	25.4(1.00)	11.9(0.47)
16	-UT-MT16	38.8(1.53)	24.4(0.96)	25.0(0.98)	25.4(1.00)	12.7(0.50)
18	-UT-MT18	38.8(1.53)	24.4(0.96)	30.0(1.18)	27.0(1.06)	15.1(0.59)
20	-UT-MT20	44.6(1.76)	26.0(1.02)	32.0(1.26)	34.9(1.37)	15.9(0.63)
22	-UT-MT22	44.6(1.76)	26.0(1.02)	32.0(1.26)	34.9(1.37)	18.3(0.72)
25	-UT-MT25	49.1(1.93)	31.3(1.23)	38.0(1.50)	34.9(1.37)	21.8(0.86)
28	-UT-MT28	64.0(2.52)	36.6(1.44)	46.0(1.81)	42.9(1.69)	21.8(0.86)
30	-UT-MT30	69.9(2.75)	39.6(1.56)	50.0(1.97)	42.9(1.69)	26.2(1.03)
32	-UT-MT32	72.3(2.85)	42.0(1.65)	50.0(1.97)	42.9(1.69)	28.6(1.13)
38	-UT-MT38	84.0(3.31)	49.4(1.94)	60.0(2.36)	50.8(2.00)	33.7(1.33)

Union Tees

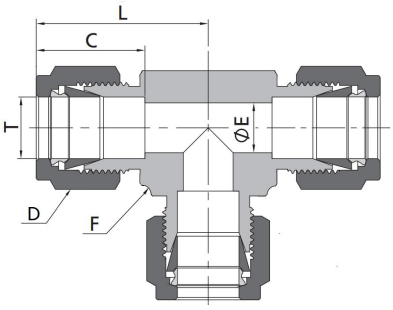

Fractional Tube

T-Tube O.D.(in.)	Basic Ordering Number	Dimension, in. (mm)				
		L	C	D	F	E
1/16	-UT-FT1	0.70(17.8)	0.34(8.6)	0.31(7.9)	0.37(9.5)	0.05(1.3)
1/8	-UT-FT2	0.96(24.4)	0.50(12.7)	0.44(11.1)	0.37(9.5)	0.09(2.3)
3/16	-UT-FT3	0.96(24.4)	0.54(13.7)	0.50(12.7)	0.44(11.1)	0.12(3.0)
1/4	-UT-FT4	1.06(26.9)	0.60(15.2)	0.56(14.3)	0.50(12.7)	0.19(4.8)
5/16	-UT-FT5	1.17(29.7)	0.64(16.2)	0.63(15.9)	0.63(15.9)	0.25(6.4)
3/8	-UT-FT6	1.20(30.5)	0.66(16.8)	0.69(17.5)	0.63(15.9)	0.28(7.1)
1/2	-UT-FT8	1.42(36.1)	0.90(22.9)	0.87(22.2)	0.81(20.6)	0.41(10.4)
5/8	-UT-FT10	1.53(38.9)	0.96(24.4)	1.00(25.4)	1.00(25.4)	0.50(12.7)
3/4	-UT-FT12	1.57(39.9)	0.96(24.4)	1.13(28.6)	1.06(27.0)	0.62(15.7)
7/8	-UT-FT14	1.76(44.7)	1.02(25.9)	1.25(31.8)	1.37(34.9)	0.72(18.3)
1	-UT-FT16	1.93(49.0)	1.23(31.2)	1.50(38.1)	1.37(34.9)	0.88(22.4)
1 1/8	-UT-FT18	2.17(55.1)	1.23(31.2)	1.81(46.0)	1.69(42.9)	0.97(24.6)
1 1/4	-UT-FT20	2.62(66.5)	1.62(41.1)	1.87(47.6)	1.69(42.9)	1.09(27.7)
1 1/2	-UT-FT24	3.07(78.0)	1.97(50.0)	2.25(57.2)	2.00(50.8)	1.34(34.0)

Metric Tube

T-Tube O.D.(mm)	Basic Ordering Number	Dimension,mm (in.)				
		L	C	D	F	E
2	-UT-MT2	22.3(0.88)	12.9(0.51)	12.0(0.47)	9.5(0.37)	1.7(0.07)
3	-UT-MT3	22.3(0.88)	12.9(0.51)	12.0(0.47)	9.5(0.37)	2.4(0.09)
4	-UT-MT4	25.4(1.00)	13.7(0.54)	12.0(0.47)	12.7(0.50)	2.4(0.09)
6	-UT-MT6	27.0(1.06)	15.3(0.60)	14.0(0.55)	12.7(0.50)	4.8(0.19)
8	-UT-MT8	29.9(1.18)	16.2(0.64)	16.0(0.63)	15.9(0.63)	6.4(0.25)
10	-UT-MT10	31.5(1.24)	17.2(0.68)	19.0(0.75)	17.5(0.69)	7.9(0.31)
12	-UT-MT12	36.0(1.42)	22.8(0.90)	22.0(0.87)	20.6(0.81)	9.5(0.37)
14	-UT-MT14	38.8(1.53)	24.4(0.96)	25.0(0.98)	25.4(1.00)	11.1(0.44)
15	-UT-MT15	38.8(1.53)	24.4(0.96)	25.0(0.98)	25.4(1.00)	11.9(0.47)
16	-UT-MT16	38.8(1.53)	24.4(0.96)	25.0(0.98)	25.4(1.00)	12.7(0.50)
18	-UT-MT18	38.8(1.53)	24.4(0.96)	30.0(1.18)	27.0(1.06)	15.1(0.59)
20	-UT-MT20	44.6(1.76)	26.0(1.02)	32.0(1.26)	34.9(1.37)	15.9(0.63)
22	-UT-MT22	44.6(1.76)	26.0(1.02)	32.0(1.26)	34.9(1.37)	18.3(0.72)
25	-UT-MT25	49.1(1.93)	31.3(1.23)	38.0(1.50)	34.9(1.37)	21.8(0.86)
28	-UT-MT28	64.0(2.52)	36.6(1.44)	46.0(1.81)	42.9(1.69)	21.8(0.86)
30	-UT-MT30	69.9(2.75)	39.6(1.56)	50.0(1.97)	42.9(1.69)	26.2(1.03)
32	-UT-MT32	72.3(2.85)	42.0(1.65)	50.0(1.97)	42.9(1.69)	28.6(1.13)
38	-UT-MT38	84.0(3.31)	49.4(1.94)	60.0(2.36)	50.8(2.00)	33.7(1.33)

Reducing Union Tees

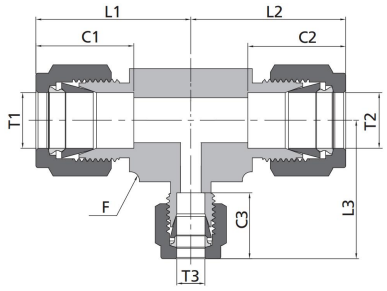

Fractional Tube

T1-O.D. (in.)	T2-O.D. (in.)	T3-O.D. (in.)	Basic Ordering Number	Dimension, in. (mm)						
				L1	L2	L3	C1	C2	C3	F
1/4	1/4	1/8	-RUT-FT4-FT4-FT2	1.05(26.7)	1.05(26.7)	0.96(24.4)	0.60(15.2)	0.60(15.2)	0.50(12.7)	0.50(12.7)
3/8	1/4	1/4	-RUT-FT6-FT4-FT4	1.20(30.5)	1.14(29.0)	1.14(29.0)	0.66(16.8)	0.60(15.2)	0.60(15.2)	0.63(15.9)
3/8	1/4	3/8	-RUT-FT6-FT4-FT6	1.20(30.5)	1.14(29.0)	1.20(30.5)	0.66(16.8)	0.60(15.2)	0.66(16.8)	0.63(15.9)
3/8	3/8	1/4	-RUT-FT6-FT6-FT4	1.20(30.5)	1.20(30.5)	1.14(29.0)	0.66(16.8)	0.66(16.8)	0.60(15.2)	0.63(15.9)
1/2	1/4	1/4	-RUT-FT8-FT4-FT4	1.42(36.1)	1.25(31.8)	1.25(31.8)	0.90(22.9)	0.60(15.2)	0.60(15.2)	0.81(20.6)
1/2	1/4	1/2	-RUT-FT8-FT4-FT8	1.42(36.1)	1.25(31.8)	1.42(36.1)	0.90(22.9)	0.60(15.2)	0.90(22.9)	0.81(20.6)
1/2	3/8	3/8	-RUT-FT8-FT6-FT6	1.42(36.1)	1.31(33.3)	1.31(33.3)	0.90(22.9)	0.66(16.8)	0.66(16.8)	0.81(20.6)
1/2	3/8	1/2	-RUT-FT8-FT6-FT8	1.42(36.1)	1.31(33.3)	1.42(36.1)	0.90(22.9)	0.66(16.8)	0.90(22.9)	0.81(20.6)
1/2	1/2	1/4	-RUT-FT8-FT8-FT4	1.42(36.1)	1.42(36.1)	1.25(31.8)	0.90(22.9)	0.90(22.9)	0.60(15.2)	0.81(20.6)
1/2	1/2	3/8	-RUT-FT8-FT8-FT6	1.42(36.1)	1.42(36.1)	1.31(33.3)	0.90(22.9)	0.90(22.9)	0.66(16.8)	0.81(20.6)
5/8	3/8	3/8	-RUT-FT10-FT6-FT6	1.53(38.9)	1.42(36.1)	1.42(36.1)	0.96(24.4)	0.66(16.8)	0.66(16.8)	1.00(25.4)
5/8	3/8	1/2	-RUT-FT10-FT6-FT8	1.53(38.9)	1.42(36.1)	1.53(38.9)	0.96(24.4)	0.66(16.8)	0.90(22.9)	1.00(25.4)
5/8	1/2	1/2	-RUT-FT10-FT8-FT8	1.53(38.9)	1.53(38.9)	1.53(38.9)	0.96(24.4)	0.90(22.9)	0.90(22.9)	1.00(25.4)
5/8	5/8	3/8	-RUT-FT10-FT10-FT6	1.53(38.9)	1.53(38.9)	1.42(36.1)	0.96(24.4)	0.96(24.4)	0.66(16.8)	1.00(25.4)
5/8	5/8	1/2	-RUT-FT10-FT10-FT8	1.53(38.9)	1.53(38.9)	1.53(38.9)	0.96(24.4)	0.96(24.4)	0.90(22.9)	1.00(25.4)
3/4	3/8	3/8	-RUT-FT12-FT6-FT6	1.56(39.6)	1.45(36.9)	1.45(36.9)	0.96(24.4)	0.66(16.8)	0.66(16.8)	1.06(27.0)
3/4	1/2	3/8	-RUT-FT12-FT8-FT6	1.56(39.6)	1.56(39.6)	1.45(36.9)	0.96(24.4)	0.90(22.9)	0.66(16.8)	1.06(27.0)
3/4	1/2	1/2	-RUT-FT12-FT8-FT8	1.56(39.6)	1.56(39.6)	1.56(39.6)	0.96(24.4)	0.90(22.9)	0.90(22.9)	1.06(27.0)
3/4	5/8	1/2	-RUT-FT12-FT10-FT8	1.56(39.6)	1.56(39.6)	1.56(39.6)	0.96(24.4)	0.96(24.4)	0.90(22.9)	1.06(27.0)
3/4	5/8	5/8	-RUT-FT12-FT10-FT10	1.56(39.6)	1.56(39.6)	1.56(39.6)	0.96(24.4)	0.96(24.4)	0.96(24.4)	1.06(27.0)
3/4	3/4	1/4	-RUT-FT12-FT12-FT4	1.56(39.6)	1.56(39.6)	1.38(35.1)	0.96(24.4)	0.96(24.4)	0.60(15.2)	1.06(27.0)
3/4	3/4	3/8	-RUT-FT12-FT12-FT6	1.56(39.6)	1.56(39.6)	1.45(36.9)	0.96(24.4)	0.96(24.4)	0.66(16.8)	1.06(27.0)
3/4	3/4	1/2	-RUT-FT12-FT12-FT8	1.56(39.6)	1.56(39.6)	1.56(39.6)	0.96(24.4)	0.96(24.4)	0.90(22.9)	1.06(27.0)
3/4	3/4	5/8	-RUT-FT12-FT12-FT10	1.56(39.6)	1.56(39.6)	1.56(39.6)	0.96(24.4)	0.96(24.4)	0.96(24.4)	1.06(27.0)
7/8	1/2	3/4	-RUT-FT14-FT8-FT12	1.76(44.7)	1.76(44.7)	1.76(44.7)	1.02(25.9)	0.90(22.9)	0.96(24.4)	1.37(34.9)
7/8	5/8	3/8	-RUT-FT14-FT10-FT6	1.76(44.7)	1.76(44.7)	1.65(41.9)	1.02(25.9)	0.96(24.4)	0.66(16.8)	1.37(34.9)
7/8	3/4	1/2	-RUT-FT14-FT12-FT8	1.76(44.7)	1.76(44.7)	1.76(44.7)	1.02(25.9)	0.96(24.4)	0.90(22.9)	1.37(34.9)
7/8	3/4	3/4	-RUT-FT14-FT12-FT12	1.76(44.7)	1.76(44.7)	1.76(44.7)	1.02(25.9)	0.96(24.4)	0.96(24.4)	1.37(34.9)
7/8	7/8	1/4	-RUT-FT14-FT14-FT4	1.76(44.7)	1.76(44.7)	1.59(40.4)	1.02(25.9)	1.02(25.9)	0.60(15.2)	1.37(34.9)
7/8	7/8	3/8	-RUT-FT14-FT14-FT6	1.76(44.7)	1.76(44.7)	1.65(41.9)	1.02(25.9)	1.02(25.9)	0.66(16.8)	1.37(34.9)
1	3/8	3/8	-RUT-FT16-FT6-FT6	1.94(49.3)	1.65(41.9)	1.65(41.9)	1.23(31.2)	0.66(16.8)	0.66(16.8)	1.37(34.9)
1	1/2	1/4	-RUT-FT16-FT8-FT4	1.94(49.3)	1.76(44.7)	1.59(40.4)	1.23(31.2)	0.90(22.9)	0.60(15.2)	1.37(34.9)
1	1/2	3/8	-RUT-FT16-FT8-FT6	1.94(49.3)	1.76(44.7)	1.65(41.9)	1.23(31.2)	0.90(22.9)	0.66(16.8)	1.37(34.9)
1	1/2	1/2	-RUT-FT16-FT8-FT8	1.94(49.3)	1.76(44.7)	1.76(44.7)	1.23(31.2)	0.90(22.9)	0.90(22.9)	1.37(34.9)
1	1/2	1	-RUT-FT16-FT8-FT16	1.94(49.3)	1.76(44.7)	1.94(49.3)	1.23(31.2)	0.90(22.9)	1.23(31.2)	1.37(34.9)
1	3/4	3/8	-RUT-FT16-FT12-FT6	1.94(49.3)	1.76(44.7)	1.65(41.9)	1.23(31.2)	0.96(24.4)	0.66(16.8)	1.37(34.9)
1	3/4	1/2	-RUT-FT16-FT12-FT8	1.94(49.3)	1.76(44.7)	1.76(44.7)	1.23(31.2)	0.96(24.4)	0.90(22.9)	1.37(34.9)
1	3/4	5/8	-RUT-FT16-FT12-FT10	1.94(49.3)	1.76(44.7)	1.76(44.7)	1.23(31.2)	0.96(24.4)	0.96(24.4)	1.37(34.9)
1	3/4	1	-RUT-FT16-FT12-FT16	1.94(49.3)	1.76(44.7)	1.94(49.3)	1.23(31.2)	0.96(24.4)	1.23(31.2)	1.37(34.9)
1	7/8	1/4	-RUT-FT16-FT14-FT4	1.94(49.3)	1.76(44.7)	1.59(40.4)	1.23(31.2)	1.02(25.9)	0.60(15.2)	1.37(34.9)
1	7/8	3/8	-RUT-FT16-FT14-FT6	1.94(49.3)	1.76(44.7)	1.65(41.9)	1.23(31.2)	1.02(25.9)	0.66(16.8)	1.37(34.9)
1	7/8	1/2	-RUT-FT16-FT14-FT8	1.94(49.3)	1.76(44.7)	1.76(44.7)	1.23(31.2)	1.02(25.9)	0.90(22.9)	1.37(34.9)
1	7/8	3/4	-RUT-FT16-FT14-FT12	1.94(49.3)	1.76(44.7)	1.76(44.7)	1.23(31.2)	1.02(25.9)	0.96(24.4)	1.37(34.9)
1	7/8	7/8	-RUT-FT16-FT14-FT14	1.94(49.3)	1.76(44.7)	1.76(44.7)	1.23(31.2)	1.02(25.9)	1.02(25.9)	1.37(34.9)
1	1	1/4	-RUT-FT16-FT16-FT4	1.94(49.3)	1.94(49.3)	1.59(40.4)	1.23(31.2)	1.23(31.2)	0.60(15.2)	1.37(34.9)
1	1	3/8	-RUT-FT16-FT16-FT6	1.94(49.3)	1.94(49.3)	1.65(41.9)	1.23(31.2)	1.23(31.2)	0.66(16.8)	1.37(34.9)
1	1	1/2	-RUT-FT16-FT16-FT8	1.94(49.3)	1.94(49.3)	1.76(44.7)	1.23(31.2)	1.23(31.2)	0.90(22.9)	1.37(34.9)
1	1	5/8	-RUT-FT16-FT16-FT10	1.94(49.3)	1.94(49.3)	1.76(44.7)	1.23(31.2)	1.23(31.2)	0.96(24.4)	1.37(34.9)
1	1	3/4	-RUT-FT16-FT16-FT12	1.94(49.3)	1.94(49.3)	1.76(44.7)	1.23(31.2)	1.23(31.2)	0.96(24.4)	1.37(34.9)
1	1	7/8	-RUT-FT16-FT16-FT14	1.94(49.3)	1.94(49.3)	1.76(44.7)	1.23(31.2)	1.23(31.2)	1.02(25.9)	1.37(34.9)
1 1/4	1 1/4	1	-RUT-FT20-FT20-FT16	2.67(67.8)	2.67(67.8)	2.17(55.1)	1.62(41.2)	1.62(41.2)	1.23(31.3)	1.69(42.9)
1 1/2	1 1/2	1	-RUT-FT24-FT24-FT16	3.10(78.7)	3.10(78.7)	2.36(60.0)	1.97(50.0)	1.97(50.0)	1.23(31.3)	2.00(50.8)

Reducing Union Tees

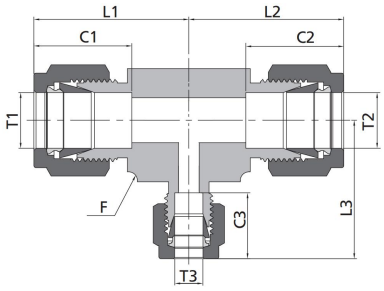

Metric Tube

T1-O.D. (mm)	T2-O.D. (mm)	T3-O.D. (mm)	Basic Ordering Number	Dimension, mm (in.)						
				L1	L2	L3	C1	C2	C3	F
3	3	6	-RUT-MT3-MT3-MT6	24.7(0.97)	24.7(0.97)	27.0(1.06)	12.9(0.51)	12.9(0.51)	15.3(0.60)	12.7(0.50)
6	6	3	-RUT-MT6-MT6-MT3	27.0(1.06)	27.0(1.06)	25.4(1.00)	15.3(0.60)	15.3(0.60)	12.9(0.51)	12.7(0.50)
6	6	8	-RUT-MT6-MT6-MT8	28.0(1.10)	28.0(1.10)	28.8(1.13)	15.3(0.60)	15.3(0.60)	16.2(0.64)	14.3(0.56)
8	8	6	-RUT-MT8-MT8-MT6	30.0(1.18)	30.0(1.18)	29.0(1.14)	16.2(0.64)	16.2(0.64)	15.3(0.60)	15.9(0.63)
8	8	12	-RUT-MT8-MT8-MT12	35.2(1.39)	35.2(1.39)	36.0(1.42)	16.2(0.64)	16.2(0.64)	22.8(0.90)	20.6(0.81)
10	10	6	-RUT-MT10-MT10-MT6	31.5(1.24)	31.5(1.24)	29.9(1.18)	17.2(0.68)	17.2(0.68)	15.3(0.60)	17.5(0.69)
10	10	8	-RUT-MT10-MT10-MT8	31.5(1.24)	31.5(1.24)	30.7(1.21)	17.2(0.68)	17.2(0.68)	16.2(0.64)	17.5(0.69)
12	12	6	-RUT-MT12-MT12-MT6	36.0(1.42)	36.0(1.42)	31.8(1.25)	22.8(0.90)	22.8(0.90)	15.3(0.60)	20.6(0.81)
12	12	8	-RUT-MT12-MT12-MT8	36.0(1.42)	36.0(1.42)	35.2(1.39)	22.8(0.90)	22.8(0.90)	16.2(0.64)	20.6(0.81)
12	12	14	-RUT-MT12-MT12-MT14	38.0(1.50)	38.0(1.50)	38.0(1.50)	22.8(0.90)	22.8(0.90)	24.4(0.96)	25.4(1.00)
12	12	18	-RUT-MT12-MT12-MT18	39.8(1.57)	39.8(1.57)	39.8(1.57)	22.8(0.90)	22.8(0.90)	24.4(0.96)	27.0(1.06)
14	14	8	-RUT-MT14-MT14-MT8	38.0(1.50)	38.0(1.50)	37.2(1.46)	24.4(0.96)	24.4(0.96)	16.2(0.64)	25.4(1.00)
14	14	10	-RUT-MT14-MT14-MT10	38.0(1.50)	38.0(1.50)	38.0(1.50)	24.4(0.96)	24.4(0.96)	17.2(0.68)	25.4(1.00)
15	15	12	-RUT-MT15-MT15-MT12	38.8(1.53)	38.8(1.53)	38.8(1.53)	24.4(0.96)	24.4(0.96)	22.8(0.90)	25.4(1.00)
16	8	16	-RUT-MT16-MT8-MT16	38.8(1.53)	37.2(1.46)	38.8(1.53)	24.4(0.96)	16.2(0.64)	24.4(0.96)	25.4(1.00)
16	16	12	-RUT-MT16-MT16-MT12	38.8(1.53)	38.8(1.53)	38.9(1.53)	24.4(0.96)	24.4(0.96)	22.8(0.90)	25.4(1.00)
18	18	8	-RUT-MT18-MT18-MT8	39.8(1.57)	39.8(1.57)	39.0(1.54)	24.4(0.96)	24.4(0.96)	16.2(0.64)	27.0(1.06)
18	18	10	-RUT-MT18-MT18-MT10	39.8(1.57)	39.8(1.57)	39.8(1.57)	24.4(0.96)	24.4(0.96)	17.2(0.68)	27.0(1.06)
18	18	12	-RUT-MT18-MT18-MT12	39.8(1.57)	39.8(1.57)	39.8(1.57)	24.4(0.96)	24.4(0.96)	22.8(0.90)	27.0(1.06)
18	18	14	-RUT-MT18-MT18-MT14	39.8(1.57)	39.8(1.57)	39.8(1.57)	24.4(0.96)	24.4(0.96)	24.4(0.96)	27.0(1.06)
20	20	14	-RUT-MT20-MT20-MT14	44.6(1.76)	44.6(1.76)	44.6(1.76)	26.0(1.02)	26.0(1.02)	24.4(0.96)	34.9(1.37)
22	22	12	-RUT-MT22-MT22-MT12	44.6(1.76)	44.6(1.76)	44.6(1.76)	26.0(1.02)	26.0(1.02)	22.8(0.90)	34.9(1.37)
25	25	12	-RUT-MT25-MT25-MT12	49.1(1.93)	49.1(1.93)	44.7(1.76)	31.3(1.23)	31.3(1.23)	22.8(0.90)	34.9(1.37)

Male Branch Tees

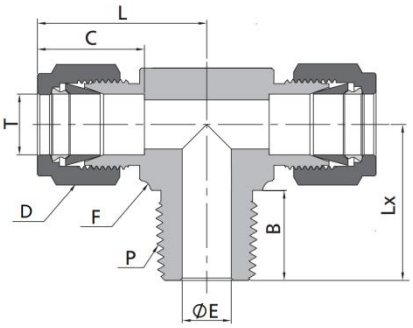

Fractional Tube to NPT Thread

T-Tube O.D.(in.)	P-NPT SIZE	Basic Ordering Number	Dimension,in(mm)						
			L	C	D	F	E	B	Lx
1/8	1/8	-MBT-FT2-MN2	0.93(23.6)	0.50(12.7)	0.44(11.1)	0.44(11.1)	0.09(2.3)	0.38(9.7)	0.70(17.8)
1/8	1/4	-MBT-FT2-MN4	0.97(24.6)	0.50(12.7)	0.44(11.1)	0.50(12.7)	0.09(2.3)	0.56(14.2)	0.92(23.4)
3/16	1/8	-MBT-FT3-MN2	0.96(24.4)	0.54(13.7)	0.50(12.7)	0.44(11.1)	0.12(3.0)	0.38(9.7)	0.70(17.8)
1/4	1/8	-MBT-FT4-MN2	1.06(26.9)	0.60(15.2)	0.56(14.3)	0.50(12.7)	0.19(4.8)	0.38(9.7)	0.74(18.8)
1/4	1/4	-MBT-FT4-MN4	1.06(26.9)	0.60(15.2)	0.56(14.3)	0.50(12.7)	0.19(4.8)	0.56(14.2)	0.92(23.4)
5/16	1/8	-MBT-FT5-MN2	1.17(29.7)	0.64(16.3)	0.63(15.9)	0.63(15.9)	0.19(4.8)	0.38(9.7)	0.82(20.8)
5/16	1/4	-MBT-FT5-MN4	1.17(29.7)	0.64(16.3)	0.63(15.9)	0.63(15.9)	0.25(6.4)	0.56(14.2)	1.01(25.7)
3/8	1/4	-MBT-FT6-MN4	1.20(30.5)	0.66(16.8)	0.69(17.5)	0.63(15.9)	0.28(7.1)	0.56(14.2)	1.00(25.4)
3/8	3/8	-MBT-FT6-MN6	1.31(33.3)	0.66(16.8)	0.69(17.5)	0.81(20.6)	0.28(7.1)	0.56(14.2)	1.11(28.2)
1/2	3/8	-MBT-FT8-MN6	1.42(36.1)	0.90(22.9)	0.87(22.2)	0.81(20.6)	0.38(9.7)	0.56(14.2)	1.11(28.2)
1/2	1/2	-MBT-FT8-MN8	1.42(36.1)	0.90(22.9)	0.87(22.2)	0.81(20.6)	0.41(10.4)	0.75(19.1)	1.30(33.0)
5/8	1/2	-MBT-FT10-MN8	1.53(38.9)	0.96(24.4)	1.00(25.4)	1.00(25.4)	0.47(11.9)	0.75(19.1)	1.41(35.8)
3/4	3/4	-MBT-FT12-MN12	1.57(39.9)	0.96(24.4)	1.13(28.6)	1.06(27.0)	0.62(15.7)	0.75(19.1)	1.45(36.8)
7/8	3/4	-MBT-FT14-MN12	1.76(44.7)	1.02(25.9)	1.25(31.8)	1.31(33.3)	0.62(15.7)	0.75(19.1)	1.50(38.1)
1	3/4	-MBT-FT16-MN12	1.94(49.3)	1.23(31.2)	1.50(38.1)	1.31(33.3)	0.62(15.7)	0.75(19.1)	1.67(42.4)
1	1	-MBT-FT16-MN16	1.94(49.3)	1.23(31.2)	1.50(38.1)	1.37(34.9)	0.88(22.4)	0.94(23.9)	1.84(46.7)

Metric Tube to NPT Thread

T-Tube O.D.(mm)	P-NPT SIZE	Basic Ordering Number	Dimension,mm(in)						
			L	C	D	F	E	B	Lx
6	1/8	-MBT-MT6-MN2	27.0(1.06)	15.3(0.60)	14.0(0.55)	12.7(0.50)	4.8(0.19)	9.7(0.38)	18.8(0.74)
6	1/4	-MBT-MT6-MN4	27.0(1.06)	15.3(0.60)	14.0(0.55)	12.7(0.50)	4.8(0.19)	14.2(0.56)	23.4(0.92)
8	1/8	-MBT-MT8-MN2	29.9(1.18)	16.2(0.64)	16.0(0.63)	15.9(0.63)	4.8(0.19)	9.7(0.38)	20.8(0.82)
8	1/4	-MBT-MT8-MN4	29.9(1.18)	16.2(0.64)	16.0(0.63)	15.9(0.63)	6.4(0.25)	14.2(0.56)	25.4(1.00)
10	1/4	-MBT-MT10-MN4	33.5(1.32)	17.2(0.68)	19.0(0.75)	20.6(0.81)	7.9(0.31)	14.2(0.56)	28.2(1.11)
10	3/8	-MBT-MT10-MN6	33.5(1.32)	17.2(0.68)	19.0(0.75)	20.6(0.81)	7.9(0.31)	14.2(0.56)	28.2(1.11)
12	1/4	-MBT-MT12-MN4	36.0(1.42)	22.8(0.90)	22.0(0.87)	20.6(0.81)	7.9(0.31)	14.2(0.56)	28.2(1.11)
12	3/8	-MBT-MT12-MN6	36.0(1.42)	22.8(0.90)	22.0(0.87)	20.6(0.81)	9.5(0.37)	14.2(0.56)	28.2(1.11)
12	1/2	-MBT-MT12-MN8	36.0(1.42)	22.8(0.90)	22.0(0.87)	20.6(0.81)	9.5(0.37)	19.1(0.75)	33.0(1.30)
16	1/2	-MBT-MT16-MN8	38.8(1.53)	24.4(0.96)	25.0(0.98)	25.4(1.00)	11.9(0.47)	19.1(0.75)	35.8(1.41)

Male Run Tees

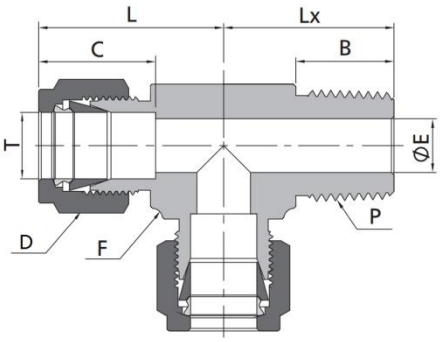

Fractional Tube to NPT Thread

T-Tube O.D.(in.)	P-NPT SIZE	Basic Ordering Number	Dimension,in(mm)						
			L	C	D	F	E	B	Lx
1/8	1/8	-MRT-FT2-MN2	0.93(23.6)	0.50(12.7)	0.44(11.1)	0.44(11.1)	0.09(2.3)	0.38(9.7)	0.70(17.8)
1/8	1/4	-MRT-FT2-MN4	0.97(24.6)	0.50(12.7)	0.44(11.1)	0.50(12.7)	0.09(2.3)	0.56(14.2)	0.92(23.4)
3/16	1/8	-MRT-FT3-MN2	0.96(24.4)	0.54(13.7)	0.50(12.7)	0.44(11.1)	0.12(3.0)	0.38(9.7)	0.70(17.8)
1/4	1/8	-MRT-FT4-MN2	1.06(26.9)	0.60(15.2)	0.56(14.3)	0.50(12.7)	0.19(4.8)	0.38(9.7)	0.74(18.8)
1/4	1/4	-MRT-FT4-MN4	1.06(26.9)	0.60(15.2)	0.56(14.3)	0.50(12.7)	0.19(4.8)	0.56(14.2)	0.92(23.4)
5/16	1/8	-MRT-FT5-MN2	1.17(29.7)	0.64(16.3)	0.63(15.9)	0.63(15.9)	0.19(4.8)	0.38(9.7)	0.82(20.8)
5/16	1/4	-MRT-FT5-MN4	1.17(29.7)	0.64(16.3)	0.63(15.9)	0.63(15.9)	0.25(6.4)	0.56(14.2)	1.01(25.7)
3/8	1/4	-MRT-FT6-MN4	1.20(30.5)	0.66(16.8)	0.69(17.5)	0.63(15.9)	0.28(7.1)	0.56(14.2)	1.00(25.4)
3/8	3/8	-MRT-FT6-MN6	1.31(33.3)	0.66(16.8)	0.69(17.5)	0.81(20.6)	0.28(7.1)	0.56(14.2)	1.11(28.2)
1/2	3/8	-MRT-FT8-MN6	1.42(36.1)	0.90(22.9)	0.87(22.2)	0.81(20.6)	0.38(9.7)	0.56(14.2)	1.11(28.2)
1/2	1/2	-MRT-FT8-MN8	1.42(36.1)	0.90(22.9)	0.87(22.2)	0.81(20.6)	0.41(10.4)	0.75(19.1)	1.3(33.0)
5/8	1/2	-MRT-FT10-MN8	1.50(38.1)	0.96(24.4)	1.00(25.4)	0.94(23.8)	0.47(11.9)	0.75(19.1)	1.41(35.8)
3/4	3/4	-MRT-FT12-MN12	1.57(39.9)	0.96(24.4)	1.13(28.6)	1.06(27.0)	0.62(15.7)	0.75(19.1)	1.45(36.8)
7/8	3/4	-MRT-FT14-MN12	1.76(44.7)	1.02(25.9)	1.25(31.8)	1.31(33.3)	0.62(15.7)	0.75(19.1)	1.50(38.1)
1	3/4	-MRT-FT16-MN12	1.94(49.3)	1.23(31.2)	1.50(38.1)	1.31(33.3)	0.62(15.7)	0.75(19.1)	1.67(42.4)
1	1	-MRT-FT16-MN16	1.94(49.3)	1.23(31.2)	1.50(38.1)	1.37(34.9)	0.88(22.4)	0.94(23.9)	1.84(46.7)

Metric Tube to NPT Thread

T-Tube O.D.(mm)	P-NPT SIZE	Basic Ordering Number	Dimension,mm(in)						
			L	C	D	F	E	B	Lx
6	1/8	-MRT-MT6-MN2	27.0(1.06)	15.3(0.60)	14.0(0.55)	12.7(0.50)	4.8(0.19)	9.7(0.38)	18.0(0.71)
6	1/4	-MRT-MT6-MN4	27.0(1.06)	15.3(0.60)	14.0(0.55)	12.7(0.50)	4.8(0.19)	14.2(0.56)	23.4(0.92)
8	1/8	-MRT-MT8-MN2	29.9(1.18)	16.2(0.64)	16.0(0.63)	15.9(0.63)	4.8(0.19)	9.7(0.38)	20.8(0.82)
8	1/4	-MRT-MT8-MN4	29.9(1.18)	16.2(0.64)	16.0(0.63)	15.9(0.63)	6.4(0.25)	14.2(0.56)	25.4(1.00)
10	1/4	-MRT-MT10-MN4	33.5(1.32)	17.2(0.68)	19.0(0.75)	20.6(0.81)	7.9(0.31)	14.2(0.56)	28.2(1.11)
10	1/2	-MRT-MT10-MN8	33.5(1.32)	17.2(0.68)	19.0(0.75)	20.6(0.81)	7.9(0.31)	14.2(0.56)	28.2(1.11)
12	1/4	-MRT-MT12-MN4	36.0(1.42)	22.8(0.90)	22.0(0.87)	20.6(0.81)	7.9(0.31)	14.2(0.56)	28.2(1.11)
12	3/8	-MRT-MT12-MN6	36.0(1.42)	22.8(0.90)	22.0(0.87)	20.6(0.81)	9.5(0.37)	14.2(0.56)	28.2(1.11)
12	1/2	-MRT-MT12-MN8	36.0(1.42)	22.8(0.90)	22.0(0.87)	20.6(0.81)	9.5(0.37)	19.1(0.75)	33.0(1.30)
16	1/2	-MRT-MT16-MN8	38.0(1.50)	24.4(0.96)	25.0(0.98)	23.8(0.94)	11.9(0.47)	19.1(0.75)	35.0(1.38)

Adjustable Male Branch Tees

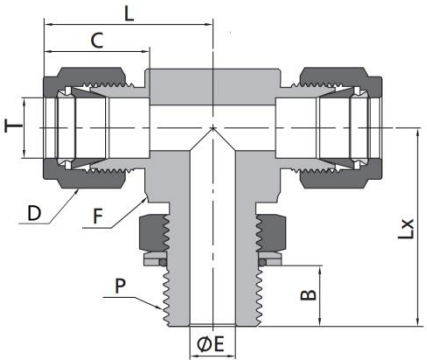

Fractional Tube to ISO Parallel Thread

T-Tube O.D.(in.)	P-BSP SIZE	Basic Ordering Number	Dimension,in(mm)						
			L	B	C	E	D	F	Lx
1/4	1/8	-AMB-FT4-PP2	1.06(26.9)	0.32(8.1)	0.60(15.2)	0.16(4.1)	0.56(14.3)	0.50(12.7)	1.04(26.4)
1/4	1/4	-AMB-FT4-PP4	1.14(29.0)	0.36(9.1)	0.60(15.2)	0.19(4.8)	0.56(14.3)	0.63(15.9)	1.27(32.3)
3/8	1/4	-AMB-FT6-PP4	1.20(30.5)	0.36(9.1)	0.66(16.8)	0.23(5.8)	0.69(17.5)	0.63(15.9)	1.27(32.3)
1/2	3/8	-AMB-FT8-PP6	1.42(36.1)	0.37(9.4)	0.90(22.9)	0.31(7.9)	0.87(22.2)	0.81(20.6)	1.46(37.1)
1/2	1/2	-AMB-FT8-PP8	1.50(38.1)	0.51(13.0)	0.90(22.9)	0.41(10.4)	0.87(22.2)	0.94(23.8)	1.71(43.4)
5/8	1/2	-AMB-FT10-PP8	1.50(38.1)	0.51(13.0)	0.96(24.4)	0.47(11.9)	1.00(25.4)	0.94(23.8)	1.71(43.4)
3/4	1/2	-AMB-FT12-PP8	1.57(39.9)	0.51(13.0)	0.96(24.4)	0.47(11.9)	1.13(28.6)	1.06(27.0)	1.78(45.2)
3/4	3/4	-AMB-FT12-PP12	1.57(39.9)	0.51(13.0)	0.96(24.4)	0.62(15.7)	1.13(28.6)	1.06(27.0)	1.92(48.8)
1	1	-AMB-FT16-PP16	1.93(49.0)	0.55(14.0)	1.23(31.2)	0.78(19.8)	1.50(38.1)	1.37(34.9)	2.11(53.6)

Fractional Tube to SAE/MS Thread

T-Tube O.D.(in.)	P-SAE/MS SIZE	Basic Ordering Number	Dimension,in(mm)						
			L	B	C	E	D	F	Lx
1/4	7/16-20	-AMB-FT4-ST7	1.12(28.5)	0.39(9.9)	0.60(15.2)	0.19(4.8)	0.56(14.3)	0.50(12.7)	1.12(28.5)
3/8	9/16-18	-AMB-FT6-ST9	1.26(32.0)	0.44(11.2)	0.66(16.8)	0.28(7.1)	0.69(17.5)	0.63(15.9)	1.27(32.3)
1/2	3/4-16	-AMB-FT8-ST12	1.48(37.6)	0.50(12.7)	0.90(22.9)	0.41(10.4)	0.87(22.2)	0.81(20.6)	1.49(37.8)
3/4	1 1/16-12	-AMB-FT12-ST17	1.63(41.4)	0.66(16.8)	0.96(24.4)	0.62(15.7)	1.13(28.6)	1.06(27.0)	1.92(48.8)
1	1 5/16-12	-AMB-FT16-ST21	1.99(50.5)	0.66(16.8)	1.23(31.2)	0.88(22.4)	1.50(38.1)	1.37(34.9)	2.11(53.6)
1 1/4	1 5/8-12	-AMB-FT20-ST26	2.67(67.8)	0.66(16.8)	1.62(41.1)	1.09(27.7)	1.87(47.6)	1.69(42.9)	2.29(58.2)
1 1/2	1 7/8-12	-AMB-FT24-ST30	3.07(78.0)	0.66(16.8)	1.97(50.0)	1.34(34.0)	2.25(57.2)	2.00(50.8)	2.38(60.5)

Metric Tube to ISO Parallel Thread

T-Tube O.D.(mm)	P-BSP SIZE	Basic Ordering Number	Dimension,mm(in)						
			L	B	C	E	D	F	Lx
6	1/8	-AMB-MT6-PP2	27.0(1.06)	8.1(0.32)	15.3(0.60)	4.0(0.16)	14.0(0.55)	12.7(0.50)	26.4(1.04)
6	1/4	-AMB-MT6-PP4	29.0(1.14)	9.1(0.36)	15.3(0.60)	4.8(0.19)	14.0(0.55)	15.9(0.63)	32.2(1.27)
8	1/8	-AMB-MT8-PP2	28.8(1.13)	8.1(0.32)	16.2(0.64)	4.0(0.16)	16.0(0.63)	14.3(0.56)	27.5(1.08)
8	1/4	-AMB-MT8-PP4	29.9(1.18)	9.1(0.36)	16.2(0.64)	5.9(0.23)	16.0(0.63)	15.9(0.63)	32.2(1.27)
10	1/4	-AMB-MT10-PP4	33.5(1.32)	9.1(0.36)	17.2(0.68)	5.9(0.23)	19.0(0.75)	20.6(0.81)	35.1(1.38)
12	3/8	-AMB-MT12-PP6	36.0(1.42)	9.4(0.37)	22.8(0.90)	7.9(0.31)	22.0(0.87)	20.6(0.81)	37.1(1.46)
12	1/2	-AMB-MT12-PP8	38.0(1.50)	13.0(0.51)	22.8(0.90)	9.5(0.37)	22.0(0.87)	23.8(0.94)	43.5(1.71)

Adjustable Male Run Tees

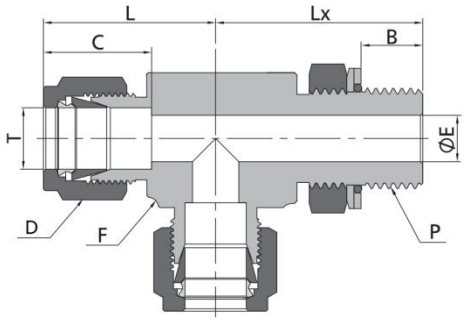

Fractional Tube to ISO Parallel Thread

T-Tube O.D.(in.)	P-BSP SIZE	Basic Ordering Number	Dimension,in(mm)						
			L	B	C	E	D	F	Lx
1/4	1/8	-AMR-FT4-PP2	1.06(26.9)	0.32(8.1)	0.60(15.2)	0.16(4.1)	0.56(14.3)	0.50(12.7)	1.04(26.4)
1/4	1/4	-AMR-FT4-PP4	1.14(29.0)	0.36(9.1)	0.60(15.2)	0.19(4.8)	0.56(14.3)	0.63(15.9)	1.27(32.3)
3/8	1/4	-AMR-FT6-PP4	1.20(30.5)	0.36(9.1)	0.66(16.8)	0.23(5.8)	0.69(17.5)	0.63(15.9)	1.27(32.3)
1/2	3/8	-AMR-FT8-PP6	1.42(36.1)	0.37(9.4)	0.90(22.9)	0.31(7.9)	0.87(22.2)	0.81(20.6)	1.46(37.1)
1/2	1/2	-AMR-FT8-PP8	1.50(38.1)	0.51(13.0)	0.90(22.9)	0.41(10.4)	0.87(22.2)	0.94(23.8)	1.71(43.4)
5/8	1/2	-AMR-FT10-PP8	1.50(38.1)	0.51(13.0)	0.96(24.4)	0.47(11.9)	1.00(25.4)	0.94(23.8)	1.71(43.4)
3/4	1/2	-AMR-FT12-PP8	1.57(39.9)	0.51(13.0)	0.96(24.4)	0.47(11.9)	1.13(28.6)	1.06(27.0)	1.78(45.2)
3/4	3/4	-AMR-FT12-PP12	1.57(39.9)	0.51(13.0)	0.96(24.4)	0.62(15.7)	1.13(28.6)	1.06(27.0)	1.92(48.8)
1	1	-AMR-FT16-PP16	1.93(49.0)	0.55(14.0)	1.23(31.2)	0.78(19.8)	1.50(38.1)	1.37(34.9)	2.11(53.6)

Fractional Tube to SAE/MS Thread

T-Tube O.D.(in.)	P-SAE/MS SIZE	Basic Ordering Number	Dimension,in(mm)						
			L	B	C	E	D	F	Lx
1/4	7/16-20	-AMR-FT4-ST7	1.12(28.5)	0.39(9.9)	0.60(15.2)	0.19(4.8)	0.56(14.3)	0.50(12.7)	1.12(28.5)
3/8	9/16-18	-AMR-FT6-ST9	1.26(32.0)	0.44(11.2)	0.66(16.8)	0.28(7.1)	0.69(17.5)	0.63(15.9)	1.27(32.3)
1/2	3/4-16	-AMR-FT8-ST12	1.48(37.6)	0.50(12.7)	0.90(22.9)	0.41(10.4)	0.87(22.2)	0.81(20.6)	1.49(37.8)
3/4	1 1/16-12	-AMR-FT12-ST17	1.63(41.4)	0.66(16.8)	0.96(24.4)	0.62(15.7)	1.13(28.6)	1.06(27.0)	1.92(48.8)
1	1 5/16-12	-AMR-FT16-ST21	1.99(50.5)	0.66(16.8)	1.23(31.2)	0.88(22.4)	1.50(38.1)	1.37(34.9)	2.11(53.6)
1 1/4	1 5/8-12	-AMR-FT20-ST26	2.67(67.8)	0.66(16.8)	1.62(41.1)	1.09(27.7)	1.87(47.6)	1.69(42.9)	2.29(58.2)
1 1/2	1 7/8-12	-AMR-FT24-ST30	3.07(78.0)	0.66(16.8)	1.97(50.0)	1.34(34.0)	2.25(57.2)	2.00(50.8)	2.38(60.5)

Metric Tube to ISO Parallel Thread

T-Tube O.D.(mm)	P-BSP SIZE	Basic Ordering Number	Dimension,mm(in)						
			L	B	C	E	D	F	Lx
6	1/8	-AMR-MT6-PP2	27.0(1.06)	8.1(0.32)	15.3(0.60)	4.0(0.16)	14.0(0.55)	12.7(0.50)	26.4(1.04)
6	1/4	-AMR-MT4-PP4	29.0(1.14)	9.1(0.36)	15.3(0.60)	4.8(0.19)	14.0(0.55)	15.9(0.63)	32.2(1.27)
8	1/8	-AMR-MT8-PP4	28.8(1.13)	8.1(0.32)	16.2(0.64)	4.0(0.16)	16.0(0.63)	14.3(0.56)	27.5(1.08)
8	1/4	-AMR-MT8-PP6	29.9(1.18)	9.1(0.36)	16.2(0.64)	5.9(0.23)	16.0(0.63)	15.9(0.63)	32.2(1.27)
10	1/4	-AMR-MT10-PP8	33.5(1.32)	9.1(0.36)	17.2(0.68)	5.9(0.23)	19.0(0.75)	20.6(0.81)	35.1(1.38)
12	3/8	-AMR-MT12-PP8	36.0(1.42)	9.4(0.37)	22.8(0.90)	7.9(0.31)	22.0(0.87)	20.6(0.81)	37.1(1.46)
12	1/2	-AMR-MT12-PP8	38.0(1.50)	13.0(0.51)	22.8(0.90)	9.5(0.37)	22.0(0.87)	23.8(0.94)	43.5(1.71)

Female Branch Tees

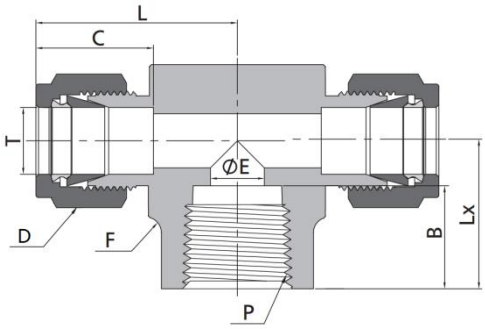

Fractional Tube to NPT Thread

T-Tube O.D.(in.)	P-NPT SIZE	Basic Ordering Number	Dimension,in(mm)						
			L	C	D	F	E	B	Lx
1/8	1/8	-FBT-FT2-FN2	0.97(24.6)	0.50(12.7)	0.44(11.1)	0.50(12.7)	0.09(2.3)	0.41(10.4)	0.75(19.1)
3/16	1/8	-FBT-FT3-FN2	1.01(25.7)	0.54(13.7)	0.50(12.7)	0.50(12.7)	0.12(3.0)	0.41(10.4)	0.75(19.1)
1/4	1/8	-FBT-FT4-FN2	1.06(26.9)	0.60(15.2)	0.56(14.3)	0.50(12.7)	0.19(4.8)	0.41(10.4)	0.75(19.1)
1/4	1/4	-FBT-FT4-FN4	1.17(29.7)	0.60(15.2)	0.56(14.3)	0.69(17.5)	0.19(4.8)	0.59(15.0)	0.88(22.4)
5/16	1/8	-FBT-FT5-FN2	1.17(29.7)	0.64(16.2)	0.63(15.9)	0.63(15.9)	0.25(6.4)	0.41(10.4)	0.75(19.1)
3/8	1/4	-FBT-FT6-FN4	1.23(31.2)	0.66(16.8)	0.69(17.5)	0.69(17.5)	0.28(7.1)	0.59(15.0)	0.88(22.4)
3/8	3/8	-FBT-FT6-FN6	1.31(33.3)	0.66(16.8)	0.69(17.5)	0.81(20.6)	0.28(7.1)	0.59(15.0)	0.88(22.4)
3/8	1/2	-FBT-FT6-FN8	1.42(36.1)	0.66(16.8)	0.69(17.5)	1.00(25.4)	0.28(7.1)	0.78(19.8)	1.12(28.4)
1/2	1/4	-FBT-FT8-FN4	1.42(36.1)	0.90(22.9)	0.87(22.2)	0.81(20.6)	0.41(10.4)	0.59(15.0)	0.88(22.4)
1/2	3/8	-FBT-FT8-FN6	1.42(36.1)	0.90(22.9)	0.87(22.2)	0.81(20.6)	0.41(10.4)	0.59(15.0)	0.88(22.4)
1/2	1/2	-FBT-FT8-FN8	1.53(38.9)	0.90(22.9)	0.87(22.2)	1.00(25.4)	0.41(10.4)	0.78(19.8)	1.12(28.4)
5/8	1/2	-FBT-FT10-FN8	1.53(38.9)	0.96(24.4)	1.00(25.4)	1.00(25.4)	0.50(12.7)	0.78(19.8)	1.12(28.4)
3/4	3/4	-FBT-FT12-FN12	1.76(44.7)	0.96(24.4)	1.13(28.6)	1.37(34.9)	0.62(15.7)	0.81(20.6)	1.25(31.8)
7/8	3/4	-FBT-FT14-FN12	1.76(44.7)	1.02(25.9)	1.25(31.8)	1.37(34.9)	0.72(18.3)	0.81(20.6)	1.25(31.8)
1	3/4	-FBT-FT16-FN12	1.93(49.0)	1.23(31.2)	1.50(38.1)	1.37(34.9)	0.88(22.4)	0.81(20.6)	1.25(31.8)
1	1	-FBT-FT16-FN16	2.11(53.6)	1.23(31.2)	1.50(38.1)	1.69(42.9)	0.88(22.4)	1.00(25.4)	1.50(38.1)

Metric Tube to NPT Thread

T-Tube O.D.(mm)	P-NPT SIZE	Basic Ordering Number	Dimension,mm(in)						
			L	C	D	F	E	B	Lx
6	1/8	-FBT-MT6-FN2	27.0(1.06)	15.3(0.60)	14.0(0.55)	12.7(0.50)	4.8(0.19)	10.4(0.41)	19.0(0.75)
6	1/4	-FBT-MT6-FN4	29.8(1.17)	15.3(0.60)	14.0(0.55)	17.5(0.69)	4.8(0.19)	15.0(0.59)	22.4(0.88)
8	1/8	-FBT-MT8-FN2	29.9(1.18)	16.2(0.64)	16.0(0.63)	15.9(0.63)	6.4(0.25)	10.4(0.41)	19.0(0.75)
8	1/4	-FBT-MT8-FN4	30.6(1.2)	16.2(0.64)	16.0(0.63)	17.5(0.69)	6.4(0.25)	15.0(0.59)	22.4(0.88)
10	1/4	-FBT-MT10-FN4	33.5(1.32)	17.2(0.68)	19.0(0.75)	20.6(0.81)	7.9(0.31)	15.0(0.59)	22.4(0.88)
12	1/8	-FBT-MT10-FN2	36.0(1.42)	22.8(0.90)	22.0(0.87)	20.6(0.81)	6.4(0.25)	10.4(0.41)	22.3(0.88)
12	1/4	-FBT-MT12-FN4	36.0(1.42)	22.8(0.90)	22.0(0.87)	20.6(0.81)	9.5(0.37)	15.0(0.59)	22.4(0.88)
12	3/8	-FBT-MT12-FN6	36.0(1.42)	22.8(0.90)	22.0(0.87)	20.6(0.81)	9.5(0.37)	15.0(0.59)	22.4(0.88)
12	1/2	-FBT-MT12-FN8	38.8(1.53)	22.8(0.90)	22.0(0.87)	25.4(1.00)	9.5(0.37)	19.8(0.78)	28.5(1.12)
16	1/2	-FBT-MT16-FN8	38.8(1.53)	24.4(0.96)	25.0(0.98)	25.4(1.00)	12.7(0.50)	19.8(0.78)	28.4(1.12)

Female Run Tees

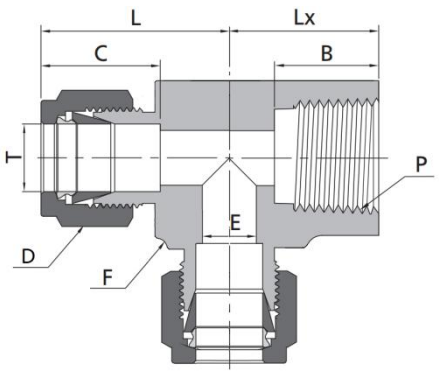

Fractional Tube to NPT Thread

T-Tube O.D.(in.)	P-NPT SIZE	Basic Ordering Number	Dimension,in(mm)						
			L	C	D	F	E	B	Lx
1/8	1/8	-FRT-FT2-FN2	0.97(24.6)	0.50(12.7)	0.44(11.1)	0.50(12.7)	0.09(2.3)	0.41(10.4)	0.75(19.1)
3/16	1/8	-FRT-FT3-FN2	1.01(25.7)	0.54(13.7)	0.50(12.7)	0.50(12.7)	0.12(3.0)	0.41(10.4)	0.75(19.1)
1/4	1/8	-FRT-FT4-FN2	1.06(26.9)	0.60(15.2)	0.56(14.3)	0.50(12.7)	0.19(4.8)	0.41(10.4)	0.75(19.1)
1/4	1/4	-FRT-FT4-FN4	1.17(29.7)	0.60(15.2)	0.56(14.3)	0.69(17.5)	0.19(4.8)	0.59(15.0)	0.88(22.4)
5/16	1/8	-FRT-FT5-FN2	1.17(29.7)	0.64(16.2)	0.63(15.9)	0.63(15.9)	0.25(6.4)	0.41(10.4)	0.75(19.1)
3/8	1/4	-FRT-FT6-FN4	1.23(31.2)	0.66(16.8)	0.69(17.5)	0.69(17.5)	0.28(7.1)	0.59(15.0)	0.88(22.4)
1/2	1/4	-FRT-FT8-FN4	1.42(36.1)	0.90(22.9)	0.87(22.2)	0.81(20.6)	0.41(10.4)	0.59(15.0)	0.88(22.4)
1/2	3/8	-FRT-FT8-FN6	1.42(36.1)	0.90(22.9)	0.87(22.2)	0.81(20.6)	0.41(10.4)	0.59(15.0)	0.88(22.4)
1/2	1/2	-FRT-FT8-FN8	1.57(39.9)	0.90(22.9)	0.87(22.2)	1.06(27.0)	0.41(10.4)	0.78(19.8)	1.12(28.4)
5/8	1/2	-FRT-FT10-FN8	1.57(39.9)	0.96(24.4)	1.00(25.4)	1.06(27.0)	0.50(12.7)	0.78(19.8)	1.12(28.4)
3/4	3/4	-FRT-FT12-FN12	1.76(44.7)	0.96(24.4)	1.13(28.6)	1.37(34.9)	0.62(15.7)	0.81(20.6)	1.25(31.8)
7/8	3/4	-FRT-FT14-FN8	1.76(44.7)	1.02(25.9)	1.25(31.8)	1.37(34.9)	0.62(15.7)	0.78(19.8)	1.12(28.4)
7/8	3/4	-FRT-FT14-FN12	1.76(44.7)	1.02(25.9)	1.25(31.8)	1.37(34.9)	0.72(18.3)	0.81(20.6)	1.25(31.8)
1	3/4	-FRT-FT16-FN12	1.93(49.0)	1.23(31.2)	1.50(38.1)	1.37(34.9)	0.88(22.4)	0.81(20.6)	1.25(31.8)
1	1	-FRT-FT16-FN16	2.11(53.6)	1.23(31.2)	1.50(38.1)	1.69(42.9)	0.88(22.4)	1.00(25.4)	1.50(38.1)

Metric Tube to NPT Thread

T-Tube O.D.(mm)	P-NPT SIZE	Basic Ordering Number	Dimension,mm(in)						
			L	C	D	F	E	B	Lx
6	1/8	-FRT-MT6-FN2	27.0(1.06)	15.3(0.60)	14.0(0.55)	12.7(0.50)	4.8(0.19)	10.4(0.41)	19.0(0.75)
6	1/4	-FRT-MT6-FN4	29.8(1.17)	15.3(0.60)	14.0(0.55)	17.5(0.69)	4.8(0.19)	15.0(0.59)	22.4(0.88)
8	1/8	-FRT-MT8-FN2	29.9(1.18)	16.2(0.64)	16.0(0.63)	15.9(0.63)	4.8(0.19)	10.4(0.41)	19.0(0.75)
8	1/4	-FRT-MT8-FN4	30.6(1.20)	16.2(0.64)	16.0(0.63)	17.5(0.69)	6.4(0.25)	15.0(0.59)	22.4(0.88)
10	1/4	-FRT-MT10-FN4	33.5(1.32)	17.2(0.68)	19.0(0.75)	20.6(0.81)	7.9(0.31)	15.0(0.59)	22.4(0.88)
12	1/4	-FRT-MT12-FN4	36.0(1.42)	22.8(0.90)	22.0(0.87)	20.6(0.81)	9.5(0.37)	15.0(0.59)	22.4(0.88)
12	3/8	-FRT-MT12-FN6	36.0(1.42)	22.8(0.90)	22.0(0.87)	20.6(0.81)	9.5(0.37)	15.0(0.59)	23.1(0.91)
12	1/2	-FRT-MT12-FN8	38.8(1.53)	22.8(0.90)	22.0(0.87)	25.4(1.00)	9.5(0.37)	19.8(0.78)	28.5(1.12)
16	1/2	-FRT-MT16-FN8	39.8(1.57)	24.4(0.96)	25.0(0.98)	27.0(1.06)	11.9(0.47)	19.8(0.78)	28.4(1.12)

Union Crosses

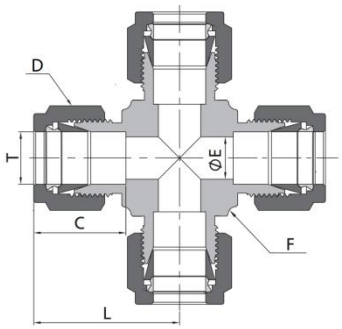

Fractional Tube

T-Tube O.D.(in.)	Basic Ordering Number	Dimension, in. (mm)				
		L	C	D	F	E
1/8	-UC-FT2	0.88(22.4)	0.50(12.7)	0.44(11.1)	0.37(9.5)	0.09(2.3)
3/16	-UC-FT3	0.96(24.4)	0.54(13.7)	0.50(12.7)	0.44(11.1)	0.12(3.0)
1/4	-UC-FT4	1.06(26.9)	0.60(15.2)	0.56(14.3)	0.50(12.7)	0.19(4.8)
5/16	-UC-FT5	1.17(29.7)	0.64(16.2)	0.63(15.9)	0.63(15.9)	0.25(6.4)
3/8	-UC-FT6	1.20(30.5)	0.66(16.8)	0.69(17.5)	0.63(15.9)	0.28(7.1)
1/2	-UC-FT8	1.42(36.1)	0.90(22.9)	0.69(17.5)	0.81(20.6)	0.41(10.4)
5/8	-UC-FT10	1.43(36.3)	0.96(24.4)	1.00(25.4)	1.06(27.0)	0.50(12.7)
3/4	-UC-FT12	1.57(39.9)	0.96(24.4)	1.13(28.6)	1.06(27.0)	0.62(15.7)
7/8	-UC-FT14	1.76(44.7)	1.02(25.9)	1.25(31.8)	1.37(34.9)	0.72(18.3)
1	-UC-FT16	1.93(49.0)	1.23(31.2)	1.50(38.1)	1.37(34.9)	0.88(22.4)

Metric Tube

T-Tube O.D.(mm)	Basic Ordering Number	Dimension,mm (in.)				
		L	C	D	F	E
3	-UC-MT3	22.3(0.88)	12.9(0.51)	12.0(0.47)	9.5(0.37)	2.4(0.09)
4	-UC-MT4	25.4(1.00)	13.7(0.54)	12.0(0.47)	12.7(0.50)	2.4(0.09)
6	-UC-MT6	27.0(1.06)	15.3(0.60)	14.0(0.55)	12.7(0.50)	4.8(0.19)
8	-UC-MT8	29.9(1.18)	16.2(0.64)	16.0(0.63)	15.9(0.63)	6.4(0.25)
10	-UC-MT10	33.5(1.32)	17.2(0.68)	19.0(0.75)	20.6(0.81)	7.9(0.31)
12	-UC-MT12	36.0(1.42)	22.8(0.90)	22.0(0.87)	20.6(0.81)	9.5(0.37)
16	-UC-MT16	37.0(1.46)	24.4(0.96)	25.0(0.98)	23.8(0.94)	12.7(0.50)
18	-UC-MT18	38.3(1.51)	24.4(0.96)	30.0(1.18)	27.0(1.06)	15.1(0.59)
20	-UC-MT20	44.6(1.76)	26.0(1.02)	32.0(1.26)	34.9(1.37)	15.9(0.63)
22	-UC-MT22	44.7(1.76)	26.0(1.02)	32.0(1.26)	34.9(1.37)	18.3(0.72)
25	-UC-MT25	49.2(1.94)	31.3(1.23)	38.0(1.50)	34.9(1.37)	21.8(0.86)

Caps

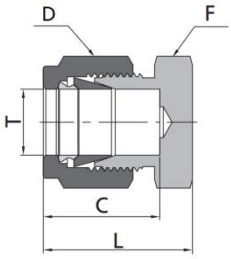

Fractional Tube

T-Tube O.D.(in.)	Basic Ordering Number	Dimension, in. (mm)			
		L	C	D	F
1/16	-TC-FT1	0.59(15.0)	0.34(8.6)	0.31(7.9)	0.31(7.9)
1/8	-TC-FT2	0.79(20.1)	0.50(12.7)	0.44(11.1)	0.44(11.1)
3/16	-TC-FT3	0.84(21.3)	0.54(13.7)	0.50(12.7)	0.44(11.1)
1/4	-TC-FT4	0.92(23.4)	0.60(15.2)	0.56(14.3)	0.50(12.7)
5/16	-TC-FT5	0.96(24.4)	0.64(16.3)	0.63(15.9)	0.56(14.3)
3/8	-TC-FT6	1.01(25.7)	0.66(16.8)	0.69(17.5)	0.63(15.9)
1/2	-TC-FT8	1.15(29.2)	0.90(22.9)	0.87(22.2)	0.81(20.6)
5/8	-TC-FT10	1.18(30.0)	0.96(24.4)	1.00(25.4)	0.94(23.8)
3/4	-TC-FT12	1.24(31.5)	0.96(24.4)	1.13(28.6)	1.06(27.0)
7/8	-TC-FT14	1.34(34.0)	1.02(25.9)	1.25(31.8)	1.19(30.2)
1	-TC-FT16	1.51(38.4)	1.23(31.2)	1.50(38.1)	1.37(34.9)
1 1/8	-TC-FT18	1.51(38.4)	1.23(31.2)	1.81(46.0)	1.63(41.3)
1 1/4	-TC-FT20	2.10(53.3)	1.62(41.1)	1.87(47.6)	1.75(44.5)
1 1/2	-TC-FL24	2.54(64.5)	1.97(50.0)	2.25(57.2)	2.13(54.0)

Metric Tube

T-Tube O.D.(mm)	Basic Ordering Number	Dimension,mm (in.)			
		L	C	D	F
2	-TC-MT2	20.1(0.79)	12.9(0.51)	12.0(0.47)	12.0(0.47)
3	-TC-MT3	20.1(0.79)	12.9(0.51)	12.0(0.47)	12.0(0.47)
4	-TC-MT4	21.3(0.84)	13.7(0.54)	12.0(0.47)	12.0(0.47)
6	-TC-MT6	23.1(0.91)	15.3(0.60)	14.0(0.55)	14.0(0.55)
8	-TC-MT8	24.5(0.96)	16.2(0.64)	16.0(0.63)	15.0(0.59)
10	-TC-MT10	26.6(1.05)	17.2(0.68)	19.0(0.75)	18.0(0.71)
12	-TC-MT12	29.1(1.15)	22.8(0.90)	22.0(0.87)	22.0(0.87)
14	-TC-MT14	29.9(1.18)	24.4(0.96)	22.0(0.87)	24.0(0.94)
15	-TC-MT15	29.9(1.18)	24.4(0.96)	25.0(0.98)	24.0(0.94)
16	-TC-MT16	29.9(1.18)	24.4(0.96)	25.0(0.98)	24.0(0.94)
18	-TC-MT18	31.4(1.24)	24.4(0.96)	30.0(1.18)	27.0(1.06)
20	-TC-MT20	34.0(1.34)	26.0(1.02)	32.0(1.26)	30.0(1.18)
22	-TC-MT22	34.0(1.34)	26.0(1.02)	32.0(1.26)	30.0(1.18)
25	-TC-MT25	38.5(1.52)	31.3(1.23)	38.0(1.50)	35.0(1.38)
28	-TC-MT28	48.5(1.91)	36.6(1.44)	46.0(1.81)	41.0(1.61)
30	-TC-MT30	53.4(2.10)	39.6(1.56)	50.0(1.97)	46.0(1.81)
32	-TC-MT32	55.8(2.20)	42.0(1.65)	50.0(1.97)	46.0(1.81)
38	-TC-MT38	65.4(2.57)	49.4(1.94)	60.0(2.36)	55.0(2.17)

Plugs

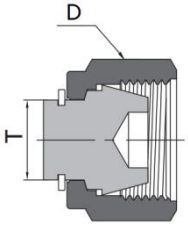

Fractional Tube

T-Tube O.D.(in.)	Basic Ordering Number	Dimension, in. (mm) D
1/16	-TP-FT1	0.31(7.9)
1/8	-TP-FT2	0.44(11.1)
3/16	-TP-FT3	0.50(12.7)
1/4	-TP-FT4	0.56(14.3)
5/16	-TP-FT5	0.63(15.9)
3/8	-TP-FT6	0.69(17.5)
1/2	-TP-FT8	0.87(22.2)
5/8	-TP-FT10	1.00(25.4)
3/4	-TP-FT12	1.13(28.6)
7/8	-TP-FT14	1.25(31.8)
1	-TP-FT16	1.50(38.1)
1 1/4	-TP-FT20	1.87(47.6)
1 1/2	-TP-FT24	2.25(57.2)

Metric Tube

T-Tube O.D.(mm)	Basic Ordering Number	Dimension, mm(In.) D
2	-TP-MT2	12.0(0.47)
3	-TP-MT3	12.0(0.47)
4	-TP-MT4	12.0(0.47)
6	-TP-MT6	14.0(0.55)
8	-TP-MT8	16.0(0.63)
10	-TP-MT10	19.0(0.75)
12	-TP-MT12	22.0(0.87)
14	-TP-MT14	25.0(0.98)
15	-TP-MT15	25.0(0.98)
16	-TP-MT16	25.0(0.98)
18	-TP-MT18	30.0(1.18)
20	-TP-MT20	32.0(1.26)
22	-TP-MT22	32.0(1.26)
25	-TP-MT25	38.0(1.50)
28	-TP-MT28	46.0(1.81)
30	-TP-MT30	50.0(1.97)
32	-TP-MT32	50.0(1.97)
38	-TP-MT38	60.0(2.36)

Plugs

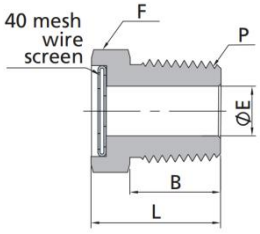

NPT Thread

P-NPT Size	Ordering Number	Dimension, in. (mm) L	F	B	E
1/8	SS-VP-NN2	0.56(14.2)	0.50(12.7)	0.38(9.7)	0.19(4.8)
1/4	SS-VP-NN4	0.78(19.8)	0.56(14.3)	0.56(14.2)	0.28(7.1)
3/8	SS-VP-NN6	0.81(20.6)	0.69(17.5)	0.56(14.2)	0.41(10.4)
1/2	SS-VP-NN8	1.03(26.2)	0.87(22.2)	0.75(19.1)	0.50(12.7)
3/4	SS-VP-NN12	1.06(26.9)	1.06(27.0)	0.76(19.2)	0.72(18.3)
1	SS-VP-NN16	1.37(34.8)	1.37(34.9)	0.94(23.9)	0.88(22.4)

Reducers

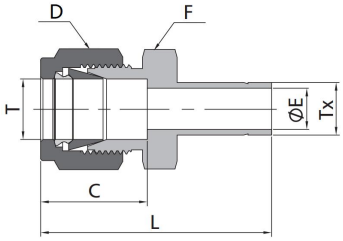

Fractional Tube

T-Tube O.D.(in.)	Tx-Tube O.D.(in.)	Basic Ordering Number	Dimension, in. (mm)				
			L	C	D	F	E
1/16	1/8	-RD-FT1-FTD2	1.15(29.2)	0.34(8.6)	0.31(7.9)	0.31(7.9)	0.05(1.3)
1/16	3/16	-RD-FT1-FTD3	1.18(30.0)	0.34(8.6)	0.31(7.9)	0.31(7.9)	0.05(1.3)
1/16	1/4	-RD-FT1-FTD4	1.24(31.5)	0.34(8.6)	0.31(7.9)	0.31(7.9)	0.05(1.3)
1/8	1/16	-RD-FT2-FTD1	1.14(29.0)	0.50(12.7)	0.44(11.1)	0.44(11.1)	0.03(0.8)
1/8	1/8	-RD-FT2-FTD2	1.32(33.5)	0.50(12.7)	0.44(11.1)	0.44(11.1)	0.08(2.0)
1/8	3/16	-RD-FT2-FTD3	1.35(34.3)	0.50(12.7)	0.44(11.1)	0.44(11.1)	0.09(2.3)
1/8	1/4	-RD-FT2-FTD4	1.42(36.1)	0.50(12.7)	0.44(11.1)	0.44(11.1)	0.09(2.3)
1/8	3/8	-RD-FT2-FTD6	1.48(37.6)	0.50(12.7)	0.44(11.1)	0.44(11.1)	0.09(2.3)
1/8	1/2	-RD-FT2-FTD8	1.74(44.2)	0.50(12.7)	0.44(11.1)	0.56(14.3)	0.09(2.3)
3/16	1/8	-RD-FT3-FTD2	1.37(34.8)	0.54(13.7)	0.50(12.7)	0.44(11.1)	0.08(2.0)
3/16	1/4	-RD-FT3-FTD4	1.46(37.1)	0.54(13.7)	0.50(12.7)	0.44(11.1)	0.12(3.0)
1/4	1/8	-RD-FT4-FTD2	1.45(36.8)	0.60(15.2)	0.56(14.3)	0.50(12.7)	0.08(2.0)
1/4	3/16	-RD-FT4-FTD3	1.48(37.6)	0.60(15.2)	0.56(14.3)	0.50(12.7)	0.12(3.0)
1/4	1/4	-RD-FT4-FTD4	1.54(39.1)	0.60(15.2)	0.56(14.3)	0.50(12.7)	0.17(4.3)
1/4	5/16	-RD-FT4-FTD5	1.57(39.9)	0.60(15.2)	0.56(14.3)	0.50(12.7)	0.19(4.8)
1/4	3/8	-RD-FT4-FTD6	1.60(40.6)	0.60(15.2)	0.56(14.3)	0.50(12.7)	0.19(4.8)
1/4	1/2	-RD-FT4-FTD8	1.82(46.2)	0.60(15.2)	0.56(14.3)	0.56(14.3)	0.19(4.8)
1/4	5/8	-RD-FT4-FTD0	1.89(48.0)	0.60(15.2)	0.56(14.3)	0.69(17.5)	0.19(4.8)
1/4	3/4	-RD-FT4-FTD2	1.88(47.8)	0.60(15.2)	0.56(14.3)	0.81(20.6)	0.19(4.8)
5/6	3/8	-RD-FT5-FTD6	1.65(41.9)	0.64(16.3)	0.63(15.9)	0.56(14.3)	0.25(6.4)
5/16	1/2	-RD-FT5-FTD8	1.87(47.5)	0.64(16.3)	0.63(15.9)	0.56(14.3)	0.25(6.4)
3/8	1/4	-RD-FT6-FTD4	1.63(41.4)	0.66(16.8)	0.69(17.5)	0.63(15.9)	0.17(4.3)
3/8	3/8	-RD-FT6-FT6	1.70(43.2)	0.66(16.8)	0.69(17.5)	0.63(15.9)	0.27(6.9)
3/8	1/2	-RD-FT6-FTD8	1.91(48.5)	0.66(16.8)	0.69(17.5)	0.63(15.9)	0.28(7.1)
3/8	5/8	-RD-FT6-FTD0	1.98(50.3)	0.66(16.8)	0.69(17.5)	0.69(17.5)	0.28(7.1)
3/8	3/4	-RD-FT6-FTD2	1.98(50.3)	0.66(16.8)	0.69(17.5)	0.81(20.6)	0.28(7.1)
1/2	1/4	-RD-FT8-FTD4	1.77(45.0)	0.90(22.9)	0.87(22.2)	0.81(20.6)	0.17(4.3)
1/2	3/8	-RD-FT8-FTD6	1.84(46.7)	0.90(22.9)	0.87(22.2)	0.81(20.6)	0.27(6.9)
1/2	1/2	-RD-FT8-FTD8	2.06(52.3)	0.90(22.9)	0.87(22.2)	0.81(20.6)	0.37(9.4)
1/2	5/8	-RD-FT8-FTD0	2.12(53.8)	0.90(22.9)	0.87(22.2)	0.81(20.6)	0.41(10.4)
1/2	3/4	-RD-FT8-FTD2	2.12(53.8)	0.90(22.9)	0.87(22.2)	0.81(20.6)	0.41(10.4)
1/2	1	-RD-FT8-FTD6	2.37(60.2)	0.90(22.9)	0.87(22.2)	1.06(27.0)	0.41(10.4)
5/8	3/4	-RD-FT10-FD2	2.15(54.6)	0.96(24.4)	1.00(25.4)	0.94(23.8)	0.50(12.7)
5/8	7/8	-RD-FT10-FTD14	2.21(56.1)	0.96(24.4)	1.00(25.4)	0.94(23.8)	0.50(12.7)
5/8	1	-RD-FT10-FTD16	2.40(61.0)	0.96(24.4)	1.00(25.4)	1.06(27.0)	0.50(12.7)
3/4	3/4	-RD-FT12-FTD12	2.15(54.6)	0.96(24.4)	1.13(28.6)	1.06(27.0)	0.58(14.7)
3/4	1	-RD-FT12-FTD16	2.46(62.5)	0.96(24.4)	1.13(28.6)	1.06(27.0)	0.62(15.7)
1	1 1/4	-RD-FT16-FTD20	3.17(80.5)	1.23(31.2)	1.50(38.1)	1.37(34.9)	0.88(22.4)
1	1 1/2	-RD-FT16-FTD24	3.51(89.2)	1.23(31.2)	1.50(38.1)	1.63(41.3)	0.88(22.4)
1	2	-RD-FT16-FTD32	4.43(112.5)	1.23(31.2)	1.50(38.1)	2.13(54.0)	0.96(24.4)
11/4	1 1/2	-RD-FT20-FTD24	4.10(104.1)	1.62(41.1)	2.25(57.2)	1.87(47.6)	1.09(27.7)

Reducers

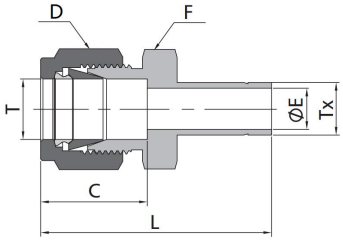

Metric Tube

T-Tube O.D.(mm)	TX-Tube O.D.(mm)	Basic Ordering Number	Dimension,mm (in.)				
			L	C	D	F	E
2	3	-RD-MT2-MTD3	33.5(1.32)	12.9(0.51)	12.0(0.47)	12.0(0.47)	1.7(0.07)
3	4	-RD-MT3-MTD4	35.0(1.38)	12.9(0.51)	12.0(0.47)	12.0(0.47)	2.4(0.09)
3	6	-RD-MT3-MTD6	36.1(1.42)	12.9(0.51)	12.0(0.47)	12.0(0.47)	2.4(0.09)
3	10	-RD-MT3-MTD10	38.4(1.51)	12.9(0.51)	12.0(0.47)	14.0(0.55)	2.4(0.09)
4	6	-RD-MT4-MTD6	37.1(1.46)	13.7(0.54)	12.0(0.47)	12.0(0.47)	2.4(0.09)
6	3	-RD-MT6-MTD3	36.9(1.45)	15.3(0.60)	14.0(0.55)	14.0(0.55)	1.9(0.07)
6	8	-RD-MT6-MTD8	39.9(1.57)	15.3(0.60)	14.0(0.55)	14.0(0.55)	4.8(0.19)
6	10	-RD-MT6-MTD10	40.7(1.60)	15.3(0.60)	14.0(0.55)	14.0(0.55)	4.8(0.19)
6	12	-RD-MT6-MTD12	46.3(1.82)	15.3(0.60)	14.0(0.55)	14.0(0.55)	4.8(0.19)
6	18	-RD-MT6-MTD18	49.6(1.95)	15.3(0.60)	14.0(0.55)	22.0(0.87)	4.8(0.19)
8	6	-RD-MT8-MTD6	40.3(1.59)	16.2(0.64)	16.0(0.63)	15.0(0.59)	4.1(0.16)
8	10	-RD-MT8-MTD10	42.0(1.65)	16.2(0.64)	16.0(0.63)	15.0(0.59)	6.4(0.25)
8	12	-RD-MT8-MTD12	47.6(1.87)	16.2(0.64)	16.0(0.63)	15.0(0.59)	6.4(0.25)
10	6	-RD-MT10-MTD6	42.4(1.67)	17.2(0.68)	19.0(0.75)	18.0(0.71)	4.1(0.16)
10	8	-RD-MT10-MTD8	43.4(1.71)	17.2(0.68)	19.0(0.75)	18.0(0.71)	5.6(0.22)
10	12	-RD-MT10-MTD12	49.8(1.96)	17.2(0.68)	19.0(0.75)	18.0(0.71)	7.9(0.31)
10	15	-RD-MT10-MTD15	51.3(2.02)	17.2(0.68)	19.0(0.75)	18.0(0.71)	7.9(0.31)
10	18	-RD-MT2-MTD3	51.3(2.02)	17.2(0.68)	19.0(0.75)	22.0(0.87)	7.9(0.31)
12	6	-RD-MT12-MTD6	44.9(1.77)	22.8(0.90)	22.0(0.87)	22.0(0.87)	4.1(0.16)
12	8	-RD-MT12-MTD8	45.9(1.81)	22.8(0.90)	22.0(0.87)	22.0(0.87)	5.6(0.22)
12	10	-RD-MT12-MTD10	46.7(1.84)	22.8(0.90)	22.0(0.87)	22.0(0.87)	7.1(0.28)
12	16	-RD-MT12-MTD16	53.8(2.12)	22.8(0.90)	22.0(0.87)	22.0(0.87)	9.5(0.37)
12	18	-RD-MT12-MTD18	53.8(2.12)	22.8(0.90)	22.0(0.87)	22.0(0.87)	9.5(0.37)
12	20	-RD-MT12-MTD20	56.1(2.21)	22.8(0.90)	22.0(0.87)	22.0(0.87)	9.5(0.37)
12	22	-RD-MT12-MTD22	56.1(2.21)	22.8(0.90)	22.0(0.87)	24.0(0.94)	9.5(0.37)
12	25	-RD-MT12-MTD25	62.4(2.46)	22.8(0.90)	22.0(0.87)	27.0(1.06)	9.5(0.37)
16	12	-RD-MT16-MTD12	53.0(2.09)	24.4(0.96)	25.0(0.98)	24.0(0.94)	8.8(0.35)
18	12	-RD-MT18-MTD12	54.6(2.15)	24.4(0.96)	30.0(1.18)	27.0(1.06)	8.8(0.35)
18	16	-RD-MT18-MTD16	56.1(2.21)	24.4(0.96)	30.0(1.18)	27.0(1.06)	12.0(0.47)
18	20	-RD-MT18-MTD20	57.6(2.27)	24.4(0.96)	30.0(1.18)	27.0(1.06)	15.1(0.59)
18	22	-RD-MT18-MTD22	57.6(2.27)	24.4(0.96)	30.0(1.18)	27.0(1.06)	15.1(0.59)
18	25	-RD-MT18-MTD25	62.4(2.46)	24.4(0.96)	30.0(1.18)	27.0(1.06)	15.1(0.59)
20	16	-RD-MT20-MTD16	57.9(2.28)	26.0(1.02)	32.0(1.26)	30.0(1.18)	12.0(0.47)
20	18	-RD-MT20-MTD18	57.9(2.28)	26.0(1.02)	32.0(1.26)	30.0(1.18)	13.9(0.55)
20	22	-RD-MT20-MTD22	59.4(2.34)	26.0(1.02)	32.0(1.26)	30.0(1.18)	15.9(0.63)
20	25	-RD-MT20-MTD25	64.2(2.53)	26.0(1.02)	32.0(1.26)	30.0(1.18)	15.8(0.62)
22	18	-RD-MT22-MTD18	57.9(2.28)	26.0(1.02)	32.0(1.26)	30.0(1.18)	13.9(0.55)
22	20	-RD-MT22-MTD20	59.4(2.34)	26.0(1.02)	32.0(1.26)	30.0(1.18)	15.5(0.61)
22	25	-RD-MT22-MTD25	64.2(2.53)	26.0(1.02)	32.0(1.26)	30.0(1.18)	18.3(0.72)
25	18	-RD-MT25-MTD18	63.1(2.48)	31.3(1.23)	38.0(1.50)	35.0(1.38)	13.9(0.55)
25	20	-RD-MT25-MTD20	64.6(2.54)	31.3(1.23)	38.0(1.50)	35.0(1.38)	15.5(0.61)

Reducers

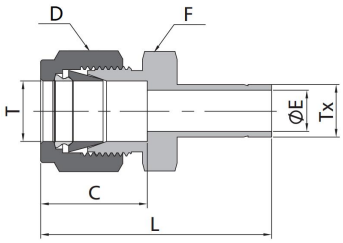

Metric Tube to Fractional Tube							
T-Tube O.D.(mm)	TX-Tube O.D.(in.)	Basic Ordering Number	Dimension, in.(mm.)				
			L	C	D	F	E
2	1/8	-RD-MT2-FTD2	33.5(1.32)	12.9(0.51)	12.0(0.47)	12.0(0.47)	1.7(0.07)
3	1/8	-RD-MT3-FTD2	33.5(1.32)	12.9(0.51)	12.0(0.47)	12.0(0.47)	2.0(0.08)
3	1/4	-RD-MT3-FTD4	36.1(1.42)	12.9(0.51)	12.0(0.47)	12.0(0.47)	2.4(0.09)
4	1/4	-RD-MT4-FTD4	37.1(1.46)	13.7(0.54)	12.0(0.47)	12.0(0.47)	2.4(0.09)
6	1/8	-RD-MT6-FTD2	36.9(1.45)	15.3(0.60)	14.0(0.55)	14.0(0.55)	2.0(0.08)
6	1/4	-RD-MT6-FTD4	39.2(1.54)	15.3(0.60)	14.0(0.55)	14.0(0.55)	4.4(0.17)
6	5/16	-RD-MT6-FTD5	39.9(1.57)	15.3(0.60)	14.0(0.55)	14.0(0.55)	4.8(0.19)
6	3/8	-RD-MT6-FTD6	40.7(1.60)	15.3(0.60)	14.0(0.55)	14.0(0.55)	4.8(0.19)
6	1/2	-RD-MT6-FTD8	46.3(1.82)	15.3(0.60)	14.0(0.55)	14.0(0.55)	4.8(0.19)
8	1/4	-RD-MT8-FTD4	40.3(1.59)	16.2(0.64)	16.0(0.63)	15.0(0.59)	4.4(0.17)
8	3/8	-RD-MT8-FTD6	42.0(1.65)	16.2(0.64)	16.0(0.63)	15.0(0.59)	6.4(0.25)
8	1/2	-RD-MT8-FTD8	47.6(1.87)	16.2(0.64)	16.0(0.63)	15.0(0.59)	6.4(0.25)
10	3/8	-RD-MT10-FTD6	44.4(1.75)	17.2(0.68)	19.0(0.75)	18.0(0.71)	6.8(0.27)
10	1/2	-RD-MT10-FTD8	49.8(1.96)	17.2(0.68)	19.0(0.75)	18.0(0.71)	7.9(0.31)
12	1/2	-RD-MT12-FTD8	52.3(2.06)	22.8(0.90)	22.0(0.87)	22.0(0.87)	9.3(0.37)
12	3/4	-RD-MT12-FTD12	53.8(2.12)	22.8(0.90)	22.0(0.87)	22.0(0.87)	9.5(0.37)
18	3/4	-RD-MT18-FTD12	56.1(2.21)	24.4(0.96)	30.0(1.18)	27.0(1.06)	14.7(0.58)
18	1	-RD-MT18-FTD16	62.4(2.46)	24.4(0.96)	30.0(1.18)	27.0(1.06)	15.1(0.59)
25	1	-RD-MT25-FTD16	69.5(2.74)	31.3(1.23)	38.0(1.50)	35.0(1.38)	20.2(0.80)

Bulkhead Reducers

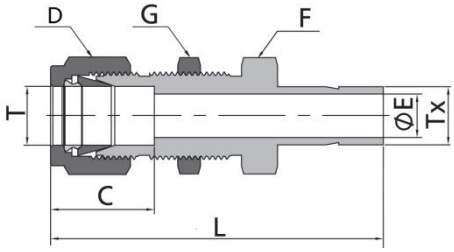

Fractional Tube								
T-Tube O.D.(in.)	Tx-Tube O.D.(in.)	Basic Ordering Number	Dimension, in. (mm)					
			L	C	D	F	G	E
1/8	1/8	-BRD-FT2-FTD2	1.95(49.5)	0.50(12.7)	0.44(11.1)	0.50(12.7)	0.50(12.7)	0.08(2.0)
1/4	1/4	-BRD-FT4-FTD4	2.20(55.9)	0.60(15.2)	0.56(14.3)	0.63(15.9)	0.63(15.9)	0.17(4.3)
3/8	3/8	-BRD-FT6-FTD6	2.41(61.2)	0.66(16.8)	0.69(17.5)	0.75(19.1)	0.75(19.1)	0.27(6.9)
1/2	1/2	-BRD-FT8-FTD8	2.87(72.9)	0.90(22.9)	0.87(22.2)	0.94(23.8)	0.94(23.8)	0.37(9.4)
5/8	5/8	-BRD-FT10-FTD10	2.96(75.2)	0.96(24.4)	1.00(25.4)	1.06(27.0)	1.06(27.0)	0.47(11.9)
3/4	3/4	-BRD-FT12-FTD12	3.21(81.5)	0.96(24.4)	1.13(28.6)	1.19(30.2)	1.19(30.2)	0.58(14.7)
1	1	-BRD-FT16-FTD16	3.95(100.3)	1.23(31.2)	1.50(38.1)	1.63(41.3)	1.63(41.3)	0.80(20.3)

Reducer Elbows

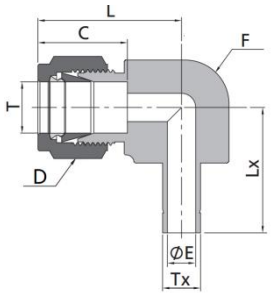

Metricl Tube

T-Tube O.D.(mm)	Tx-Tube O.D.(mm)	Basic Ordering Number	Dimension, mm (in.)					
			L	C	D	F	G	E
6	6	-RDE-MT6-MTD6	27.0(1.06)	27.0(1.06)	27.0(1.06)	27.0(1.06)	27.0(1.06)	27.0(1.06)
12	12	-RDE-MT12-MTD12	38.1(1.50)	38.1(1.50)	38.1(1.50)	38.1(1.50)	38.1(1.50)	38.1(1.50)

Port Connectors

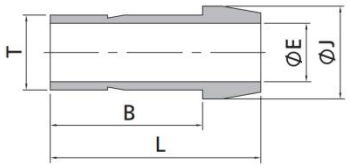

1" /25 mm and below

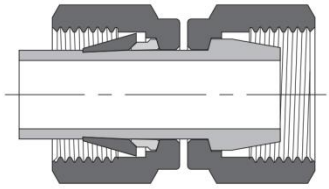

1 1/4" /28 mm and above

Fractional Tube

T-Tube O.D.(in.)	Basic Ordering Number	Dimension, in. (mm)			
		L	F	B	E
1/16	-PC-FTD1	0.54(13.7)	0.42(10.7)	0.03(0.8)	0.13(3.3)
1/8	-PC-FTD2	0.88(22.4)	0.62(15.7)	0.08(2.0)	0.24(6.1)
1/4	-PC-FTD4	0.97(24.6)	0.74(18.8)	0.17(4.3)	0.37(9.4)
5/16	-PC-FTD5	1.02(25.9)	0.79(20.1)	0.22(5.6)	0.43(10.9)
3/8	-PC-FTD6	1.03(26.2)	0.80(20.3)	0.27(6.9)	0.50(12.7)
1/2	-PC-FTD8	1.41(35.8)	1.02(25.9)	0.37(9.4)	0.62(15.7)
5/8	-PC-FTD10	1.64(41.7)	1.11(28.1)	0.47(11.9)	0.81(20.5)
3/4	-PC-FTD12	1.65(41.9)	1.09(27.7)	0.58(14.7)	0.87(22.1)
1	-PC-FTD16	1.89(48.0)	1.36(34.5)	0.80(20.3)	1.12(28.4)
1 1/4	-PC-FTD20	2.72(69.1)	1.99(50.6)	1.02(25.9)	1.47(37.4)
1 1/2	-PC-FTD24	3.31(84.1)	2.34(59.4)	1.25(31.8)	1.80(45.8)

Metricl Tube

T-Tube O.D.(mm)	Basic Ordering Number	Dimension, mm (in.)			
		L	F	B	E
3	-PC-MTD3	22.2(0.87)	15.7(0.62)	1.9(0.07)	6.0(0.24)
6	-PC-MTD6	24.6(0.97)	18.7(0.74)	4.1(0.16)	9.0(0.35)
8	-PC-MTD8	25.9(1.02)	20.0(0.79)	5.6(0.22)	11.0(0.43)
10	-PC-MTD10	26.1(1.03)	20.2(0.80)	7.1(0.28)	13.1(0.52)
12	-PC-MTD12	35.8(1.41)	26.0(1.02)	8.8(0.35)	15.0(0.59)
15	-PC-MTD15	37.8(1.49)	27.6(1.09)	11.2(0.44)	19.6(0.77)
16	-PC-MTD16	37.8(1.49)	27.6(1.09)	12.0(0.47)	20.6(0.81)
18	-PC-MTD18	37.8(1.49)	27.7(1.09)	13.9(0.55)	21.0(0.83)
20	-PC-MTD20	39.4(1.55)	29.2(1.15)	15.5(0.61)	24.6(0.97)
25	-PC-MTD25	49.3(1.94)	34.5(1.36)	19.9(0.78)	31.2(1.23)
28	-PC-MTD28	63.5(2.5)	48.3(1.90)	22.5(0.89)	34.4(1.35)
30	-PC-MTD30	67.6(2.66)	52.2(2.06)	24.3(0.96)	37.4(1.47)
32	-PC-MTD32	69.7(2.74)	52.4(2.06)	26.5(1.04)	39.4(1.55)
38	-PC-MTD38	81.9(3.22)	61.4(2.42)	31.6(1.24)	45.8(1.80)

Reducing Port Connectors

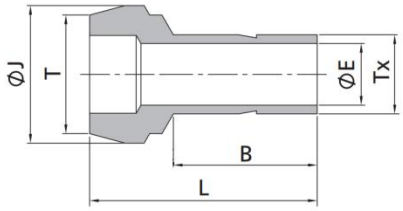

Fractional Tube

T-Tube O.D.(in.)	Tx-Tube O.D.(in.)	Basic Ordering Number	Dimension, in. (mm)			
			L	B	E	J
1/8	1/16	-RPC-FT2-FTD1	0.68(17.3)	0.34(8.6)	0.03(0.8)	0.24(6.1)
1/4	1/16	-RPC-FT4-FTD1	0.71(18.0)	0.34(8.6)	0.03(0.8)	0.37(9.4)
1/4	1/8	-RPC-FT4-FTD2	0.89(22.6)	0.53(13.5)	0.08(2.0)	0.37(9.4)
3/8	1/8	-RPC-FT6-FTD2	0.91(23.1)	0.53(13.5)	0.08(2.0)	0.50(12.7)
3/8	1/4	-RPC-FT6-FTD4	0.98(24.9)	0.62(15.7)	0.17(4.3)	0.50(12.7)
1/2	1/4	-RPC-FT8-FTD4	1.15(29.2)	0.62(15.7)	0.17(4.3)	0.62(15.7)
1/2	3/8	-RPC-FT8-FTD6	1.20(30.5)	0.69(17.5)	0.27(6.9)	0.62(15.7)
3/4	1/2	-RPC-FT12-FTD8	1.49(37.8)	0.91(23.1)	0.37(9.4)	0.87(22.1)
1	1/2	-RPC-FT16-FTD8	1.69(42.9)	0.96(24.4)	0.37(9.4)	1.12(28.5)
1	3/4	-RPC-FT16-FTD12	1.72(43.7)	1.02(25.9)	0.58(14.7)	1.12(28.5)

Metricl Tube

T-Tube O.D.(mm)	T-Tube O.D.(mm)	Basic Ordering Number	Dimension, mm (in.)			
			L	B	E	J
6	3	-RPC-MT6-MTD3	22.6(0.89)	13.5(0.53)	1.9(0.07)	9.0(0.35)
8	6	-RPC-MT8-MTD6	24.7(0.97)	15.7(0.62)	4.1(0.16)	11.0(0.43)
10	6	-RPC-MT10-MTD6	25.0(0.98)	15.7(0.62)	4.1(0.16)	13.1(0.52)
10	8	-RPC-MT10-MTD8	26.3(1.04)	17.0(0.67)	5.6(0.22)	13.1(0.52)
12	6	-RPC-MT12-MTD6	29.6(1.17)	15.7(0.62)	4.1(0.16)	15.0(0.59)
12	8	-RPC-MT12-MTD8	29.8(1.17)	16.8(0.66)	5.6(0.22)	15.0(0.59)
12	10	-RPC-MT12-MTD10	30.4(1.20)	17.5(0.69)	7.1(0.28)	15.0(0.59)
16	12	-RPC-MT16-MTD12	36.2(1.43)	23.1(0.91)	8.8(0.35)	19.0(0.75)
28	25	-RPC-MT28-MTD25	56.5(2.22)	33.0(1.30)	19.8(0.78)	34.3(1.35)
32	25	-RPC-MT32-MTD25	60.3(2.37)	33.0(1.30)	19.8(0.78)	39.5(1.56)
38	25	-RPC-MT38-MTD25	65.8(2.59)	33.0(1.30)	19.8(0.78)	47.1(1.85)

Male Adaptors

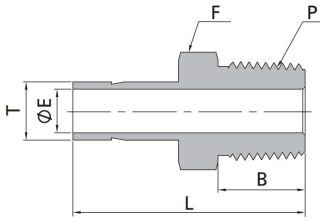

1" and below

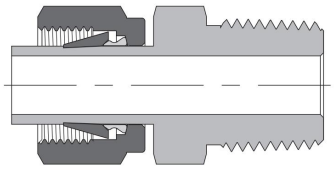

1 1/4" and above

Fractional Tube to NPT Thread

T-Tube O.D.(in.)	P-NPT Size	Basic Ordering Number	Dimension, in. (mm)			
			L	B	E	F
1/16	1/8	-MAD-FTD1-MN2	1.00(25.4)	0.38(9.7)	0.03(0.8)	0.44(11.1)
1/8	1/8	-MAD-FTD2-MN2	1.16(29.5)	0.38(9.7)	0.08(2.0)	0.44(11.1)
1/8	1/4	-MAD-FTD2-MN4	1.37(34.8)	0.56(14.2)	0.08(2.0)	0.56(14.3)
3/16	1/8	-MAD-FTD3-MN2	1.19(30.2)	0.38(9.7)	0.12(3.0)	0.44(11.1)
3/16	1/4	-MAD-FTD3-MN4	1.40(35.6)	0.56(14.2)	0.12(3.0)	0.56(14.3)
1/4	1/8	-MAD-FTD4-MN2	1.25(31.8)	0.38(9.7)	0.17(4.3)	0.44(11.1)
1/4	1/4	-MAD-FTD4-MN4	1.46(37.1)	0.56(14.2)	0.17(4.3)	0.56(14.3)
1/4	3/8	-MAD-FTD4-MN6	1.49(37.8)	0.56(14.2)	0.17(4.3)	0.69(17.5)
1/4	1/2	-MAD-FTD4-MN8	1.71(43.4)	0.75(19.1)	0.17(4.3)	0.87(22.2)
5/16	1/8	-MAD-FTD5-MN2	1.29(32.8)	0.38(9.7)	0.19(4.8)	0.44(11.1)
5/16	1/4	-MAD-FTD5-MN4	1.50(38.1)	0.56(14.2)	0.22(5.6)	0.56(14.3)
5/16	3/8	-MAD-FTD5-MN6	1.53(38.9)	0.56(14.2)	0.22(5.6)	0.69(17.5)
5/16	1/2	-MAD-FTD5-MN8	1.74(44.2)	0.75(19.1)	0.22(5.6)	0.87(22.2)
3/8	1/8	-MAD-FTD6-MN2	1.32(33.5)	0.38(9.7)	0.19(4.8)	0.44(11.1)
3/8	1/4	-MAD-FTD6-MN4	1.53(38.9)	0.56(14.2)	0.27(6.9)	0.56(14.3)
3/8	3/8	-MAD-FTD6-MN6	1.56(39.6)	0.56(14.2)	0.27(6.9)	0.69(17.5)
3/8	1/2	-MAD-FTD6-MN8	1.78(45.2)	0.75(19.1)	0.27(6.9)	0.87(22.2)
1/2	1/4	-MAD-FTD8-MN4	1.75(44.5)	0.56(14.2)	0.28(7.1)	0.56(14.3)
1/2	3/8	-MAD-FTD8-MN6	1.78(45.2)	0.56(14.2)	0.37(9.4)	0.69(17.5)
1/2	1/2	-MAD-FTD8-MN8	2.00(50.8)	0.75(19.1)	0.37(9.4)	0.87(22.2)
5/8	1/2	-MAD-FTD10-MN8	2.06(52.3)	0.75(19.1)	0.47(11.9)	0.87(22.2)
3/4	1/2	-MAD-FTD12-MN8	2.06(52.3)	0.75(19.1)	0.47(11.9)	0.87(22.2)
3/4	3/4	-MAD-FTD12-MN12	2.06(52.3)	0.75(19.1)	0.58(14.7)	1.06(27.0)
3/4	1	-MAD-FTD12-MN16	2.41(61.2)	0.94(23.9)	0.81(20.7)	1.37(34.9)
1	3/4	-MAD-FTD16-MN12	2.31(58.7)	0.75(19.1)	0.62(15.7)	1.06(27.0)
1	1	-MAD-FTD16-MN16	2.60(66.0)	0.94(23.9)	0.80(20.3)	1.37(34.9)
1 1/4	1 1/4	-MAD-FTD20-MN20	3.16(80.3)	0.94(23.9)	1.02(25.9)	1.75(44.5)
1 1/2	1 1/2	-MAD-FTD24-MN24	3.72(94.5)	1.03(26.2)	1.25(31.8)	2.13(54.0)

Franctional Tube to RT Thread

T-Tube O.D.(mm)	P-RT Size	Basic Ordering Number	Dimension,in. (mm)			
			L	B	E	F
1/8	1/8	-MAD-FTD2-RT2	1.00(25.4)	0.38(9.7)	0.03(0.8)	0.44(11.1)
1/8	1/4	-MAD-FTD2-RT4	1.16(29.5)	0.38(9.7)	0.08(2.0)	0.44(11.1)
1/4	1/8	-MAD-FTD4-RT2	1.37(34.8)	0.56(14.2)	0.08(2.0)	0.56(14.3)
1/4	1/4	-MAD-FTD4-RT4	1.19(30.2)	0.38(9.7)	0.12(3.0)	0.44(11.1)
1/4	3/8	-MAD-FTD4-RT6	1.40(35.6)	0.56(14.2)	0.12(3.0)	0.56(14.3)
1/4	1/2	-MAD-FTD4-RT8	1.25(31.8)	0.38(9.7)	0.17(4.3)	0.44(11.1)
5/16	1/8	-MAD-FTD5-RT2	1.46(37.1)	0.56(14.2)	0.17(4.3)	0.56(14.3)
5/16	1/4	-MAD-FTD5-RT4	1.49(37.8)	0.56(14.2)	0.17(4.3)	0.69(17.5)
3/8	1/4	-MAD-FTD6-RT4	1.71(43.4)	0.75(19.1)	0.17(4.3)	0.87(22.2)
3/8	3/8	-MAD-FTD6-RT6	1.29(32.8)	0.38(9.7)	0.19(4.8)	0.44(11.1)
3/8	1/2	-MAD-FTD6-RT8	1.50(38.1)	0.56(14.2)	0.22(5.6)	0.56(14.3)
1/2	1/4	-MAD-FTD8-RT4	1.53(38.9)	0.56(14.2)	0.22(5.6)	0.69(17.5)
1/2	3/8	-MAD-FTD8-RT6	1.74(44.2)	0.75(19.1)	0.22(5.6)	0.87(22.2)
1/2	1/2	-MAD-FTD8-RT8	1.32(33.5)	0.38(9.7)	0.19(4.8)	0.44(11.1)
5/8	3/8	-MAD-FTD10-RT6	1.53(38.9)	0.56(14.2)	0.27(6.9)	0.56(14.3)
5/8	1/2	-MAD-FTD10-RT8	1.56(39.6)	0.56(14.2)	0.27(6.9)	0.69(17.5)
3/4	3/4	-MAD-FTD12-RT12	1.78(45.2)	0.75(19.1)	0.27(6.9)	0.87(22.2)
1	1	-MAD-FTD16-RT16	1.75(44.5)	0.56(14.2)	0.28(7.1)	0.56(14.3)

Male Adaptors

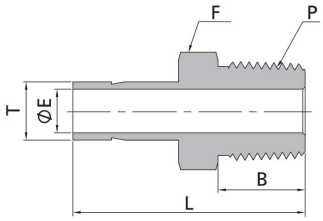

1" and below

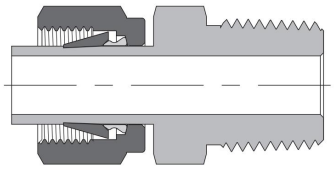

1 1/4" and above

Metricl Tube to NPT Thread

T-Tube O.D.(mm)	P-NPT Size	Basic Ordering Number	Dimension, mm (in.)			
			L	B	E	F
3	1/8	-MAD-MTD3-MN2	29.4(1.16)	9.7(0.38)	1.8(0.07)	12.0(0.47)
4	1/8	-MAD-MTD4-MN2	29.4(1.16)	9.7(0.38)	2.0(0.08)	12.0(0.47)
6	1/8	-MAD-MTD6-MN2	32.8(1.29)	9.7(0.38)	4.1(0.16)	12.0(0.47)
6	1/4	-MAD-MTD6-MN4	38.1(1.50)	14.2(0.56)	4.1(0.16)	14.0(0.55)
6	3/8	-MAD-MTD6-MN6	39.2(1.54)	14.2(0.56)	4.1(0.16)	18.0(0.71)
6	1/2	-MAD-MTD6-MN8	42.1(1.66)	19.1(0.75)	4.1(0.16)	22.0(0.87)
8	1/4	-MAD-MTD8-MN4	39.1(1.54)	14.2(0.56)	5.6(0.22)	14.0(0.55)
8	3/8	-MAD-MTD8-MN6	39.9(1.57)	14.2(0.56)	5.6(0.22)	19.0(0.75)
10	1/4	-MAD-MTD10-MN4	39.9(1.57)	14.2(0.56)	7.1(0.28)	14.0(0.55)
10	3/8	-MAD-MTD10-MN6	40.6(1.60)	14.2(0.56)	7.1(0.28)	18.0(0.71)
10	1/2	-MAD-MTD10-MN8	46.2(1.82)	19.1(0.75)	7.1(0.28)	22.0(0.87)
12	1/4	-MAD-MTD12-MN4	46.5(1.83)	14.2(0.56)	7.1(0.28)	14.0(0.55)
12	3/8	-MAD-MTD12-MN6	46.2(1.82)	14.2(0.56)	8.8(0.35)	18.0(0.71)
12	1/2	-MAD-MTD12-MN8	52.1(2.05)	19.1(0.75)	8.8(0.35)	22.0(0.87)
16	1/2	-MAD-MTD16-MN8	50.8(2.00)	19.1(0.75)	12.7(0.50)	22.0(0.87)
16	3/4	-MAD-MTD16-MN12	51.6(2.03)	19.1(0.75)	12.7(0.50)	27.0(1.06)
18	1/2	-MAD-MTD18-MN8	50.8(2.00)	19.1(0.75)	12.7(0.50)	27.0(1.06)
18	3/4	-MAD-MTD18-MN12	51.6(2.03)	19.1(0.75)	14.0(0.55)	27.0(1.06)
20	1/2	-MAD-MTD20-MN8	51.8(2.04)	19.1(0.75)	11.9(0.47)	22.0(0.87)
20	3/4	-MAD-MTD20-MN12	52.4(2.06)	19.1(0.75)	15.1(0.59)	27.0(1.06)
25	1	-MAD-MTD25-MN16	65.9(2.59)	23.9(0.94)	19.8(0.78)	35.0(1.38)
28	1	-MAD-MTD28-MN16	74.4(2.93)	23.9(0.94)	22.2(0.87)	35.0(1.38)
28	1 1/4	-MAD-MTD28-MN20	76.2(3.00)	23.9(0.94)	22.5(0.89)	46.0(1.81)
30	1	-MAD-MTD30-MN16	79.2(3.12)	23.9(0.94)	22.2(0.87)	41.0(1.61)
30	1 1/4	-MAD-MTD30-MN20	80.0(3.15)	23.9(0.94)	24.3(0.96)	46.0(1.81)
32	1 1/4	-MAD-MTD32-MN20	81.0(3.19)	23.9(0.94)	26.5(1.04)	46.0(1.81)
38	1 1/2	-MAD-MTD38-MN24	92.2(3.63)	26.2(1.03)	31.6(1.24)	55.0(2.17)
1 1/2	1 1/2	-MAD-FTD24-MN24	3.72(94.5)	1.03(26.2)	1.25(31.8)	2.13(54.0)

Metricl Tube to RT Thread

T-Tube O.D.(mm)	P-RT Size	Basic Ordering Number	Dimension, mm (in.)			
			L	B	E	F
3	1/8	-MAD-MTD3-RT2	29.4(1.16)	9.7(0.38)	1.8(0.07)	12.0(0.47)
4	1/8	-MAD-MTD4-RT2	29.4(1.16)	9.7(0.38)	2.0(0.08)	12.0(0.47)
6	1/8	-MAD-MTD6-RT2	32.8(1.29)	9.7(0.38)	4.1(0.16)	12.0(0.47)
6	1/4	-MAD-MTD6-RT4	38.1(1.50)	14.2(0.56)	4.1(0.16)	14.0(0.55)
8	1/4	-MAD-MTD8-RT4	39.1(1.54)	14.2(0.56)	5.6(0.22)	14.0(0.55)
8	3/8	-MAD-MTD8-RT6	39.9(1.57)	14.2(0.56)	5.6(0.22)	18.0(0.71)
10	1/4	-MAD-MTD10-RT4	39.9(1.57)	14.2(0.56)	7.1(0.28)	14.0(0.55)
10	3/8	-MAD-MTD10-RT6	40.6(1.60)	14.2(0.56)	7.1(0.28)	18.0(0.71)
10	1/2	-MAD-MTD10-RT8	44.5(1.75)	19.1(0.75)	7.5(0.30)	22.0(0.87)
12	1/4	-MAD-MTD12-RT4	46.5(1.83)	14.2(0.56)	7.1(0.28)	16.0(0.63)
12	3/8	-MAD-MTD12-RT6	46.2(1.82)	14.2(0.56)	8.8(0.35)	18.0(0.71)
12	1/2	-MAD-MTD12-RT8	51.8(2.04)	19.1(0.75)	8.8(0.35)	22.0(0.87)
16	1/2	-MAD-MTD16-RT8	50.8(2.00)	19.1(0.75)	12.7(0.50)	22.0(0.87)
18	3/4	-MAD-MTD18-RT12	51.6(2.03)	19.1(0.75)	14.0(0.55)	27.0(1.06)
20	3/4	-MAD-MTD20-RT12	52.4(2.06)	19.1(0.75)	15.1(0.59)	27.0(1.06)
25	1	-MAD-MTD25-RT16	65.9(2.59)	23.9(0.94)	19.8(0.78)	35.0(1.38)
28	1	-MAD-MTD28-RT16	74.7(2.94)	23.9(0.94)	22.2(0.87)	35.0(1.38)
28	1 1/4	-MAD-MTD28-RT20	76.2(3.00)	23.9(0.94)	22.5(0.89)	46.0(1.81)
30	1 1/4	-MAD-MTD30-RT20	80.0(3.15)	23.9(0.94)	24.3(0.96)	46.0(1.81)
32	1 1/4	-MAD-MTD32-RT20	81.0(3.19)	23.9(0.94)	26.5(1.04)	46.0(1.81)
38	1 1/2	-MAD-MTD38-RT24	92.2(3.63)	26.2(1.03)	31.6(1.24)	55.0(2.17)

Male Adaptors

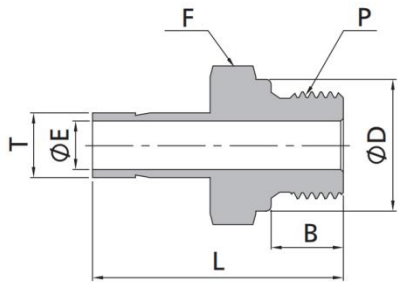

Fractional Tube to ISO Parallel Thread

T-Tube O.D.(in.)	P-RP Size	Basic Ordering Number	Dimension, in. (mm)				
			L	B	E	F	D
1/8	1/8	-MAD-FTD2-RS2	1.22(31.0)	0.28(7.1)	0.08(2.0)	0.56(14.3)	0.54(13.7)
1/8	1/4	-MAD-FTD2-RS4	1.41(35.8)	0.44(11.2)	0.08(2.0)	0.75(19.1)	0.70(17.8)
1/4	1/8	-MAD-FTD4-RS2	1.31(33.3)	0.28(7.1)	0.16(4.1)	0.56(14.3)	0.54(13.7)
1/4	1/4	-MAD-FTD4-RS4	1.50(38.1)	0.44(11.2)	0.17(4.3)	0.75(19.1)	0.70(17.8)
3/8	1/8	-MAD-FTD6-RS2	1.34(34.0)	0.28(7.1)	0.05(1.3)	0.56(14.3)	0.54(13.7)
3/8	1/4	-MAD-FTD6-RS4	1.57(39.9)	0.44(11.2)	0.23(5.8)	0.75(19.1)	0.70(17.8)
3/8	3/8	-MAD-FTD6-RS6	1.60(40.6)	0.44(11.2)	0.27(6.9)	0.87(22.2)	0.85(21.6)
3/8	1/2	-MAD-FTD6-RS8	1.69(42.9)	0.56(14.2)	0.28(7.1)	1.06(27.0)	1.02(25.9)
1/2	1/4	-MAD-FTD8-RS4	1.79(45.5)	0.44(11.2)	0.23(5.8)	0.75(19.1)	0.70(17.8)
1/2	3/8	-MAD-FTD8-RS6	1.82(46.2)	0.44(11.2)	0.31(7.9)	0.87(22.2)	0.85(21.6)
1/2	1/2	-MAD-FTD8-RS8	1.94(49.2)	0.56(14.2)	0.37(9.4)	1.06(27.0)	1.02(25.9)
5/8	1/2	-MAD-FTD10-RS8	1.97(50.0)	0.56(14.2)	0.47(11.9)	1.06(27.0)	1.02(25.9)
3/4	3/4	-MAD-FTD12-RS12	2.16(54.9)	0.63(16.0)	0.58(14.7)	1.31(33.3)	1.26(32.0)
1	1	-MAD-FTD16-RS16	2.54(64.5)	0.72(18.3)	0.80(20.3)	1.63(41.3)	1.53(38.9)

Metricl Tube to ISO Parallel Thread

T-Tube O.D.(mm)	P-RS Size	Basic Ordering Number	Dimension, mm (in.)				
			L	B	E	F	
3	1/8	-MAD-MTD3-RS2	31.0(1.22)	7.1(0.28)	1.8(0.07)	14.0(0.55)	13.7(0.54)
4	1/8	-MAD-MTD4-RS2	31.8(1.25)	7.1(0.28)	2.0(0.08)	14.0(0.55)	13.7(0.54)
6	1/8	-MAD-MTD6-RS2	34.3(1.35)	7.1(0.28)	4.0(0.16)	14.0(0.55)	13.7(0.54)
6	1/4	-MAD-MTD6-RS4	39.1(1.54)	11.2(0.44)	4.1(0.16)	19.0(0.75)	17.8(0.70)
8	1/4	-MAD-MTD8-RS4	40.1(1.58)	11.2(0.44)	5.6(0.22)	19.0(0.75)	17.8(0.70)
10	1/4	-MAD-MTD10-RS4	40.9(1.61)	11.2(0.44)	5.9(0.23)	19.0(0.75)	17.8(0.70)
10	3/8	-MAD-MTD10-RS6	41.7(1.64)	11.2(0.44)	7.1(0.28)	22.0(0.87)	21.6(0.85)
10	1/2	-MAD-MTD10-RS8	44.7(1.76)	14.2(0.56)	7.1(0.28)	27.0(1.06)	25.9(1.02)
12	1/4	-MAD-MTD12-RS4	46.7(1.84)	11.2(0.44)	5.9(0.23)	19.0(0.75)	17.8(0.70)
12	3/8	-MAD-MTD12-RS6	47.2(1.86)	11.2(0.44)	7.9(0.31)	22.0(0.87)	21.6(0.85)
12	1/2	-MAD-MTD12-RS8	50.5(1.99)	14.2(0.56)	8.8(0.35)	27.0(1.06)	25.9(1.02)
16	1/2	-MAD-MTD16-RS8	50.8(2.00)	14.2(0.56)	11.9(0.47)	27.0(1.06)	25.9(1.02)
18	3/4	-MAD-MTD18-RS12	55.9(2.20)	16.0(0.63)	13.9(0.55)	35.0(1.38)	32.0(1.26)
20	3/4	-MAD-MTD20-RS12	57.0(2.24)	16.0(0.63)	15.1(0.59)	33.0(1.30)	32.0(1.26)
25	1	-MAD-MTD25-RS16	65.1(2.56)	18.3(0.72)	19.8(0.78)	41.0(1.61)	38.9(1.53)

Male Adaptors

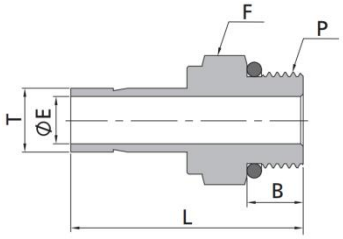

Fractional Tube to SAE/MS Thread

T-Tube O.D.(in.)	P-SAE/MS Size	Basic Ordering Number	Dimension, in. (mm)			
			L	B	E	F
1/8	5/16-24	-MAD-FTD2-ST5	1.20(30.5)	0.30(7.6)	0.08(2.0)	0.44(11.1)
1/4	7/16-20	-MAD-FTD4-ST7	1.39(35.3)	0.36(9.1)	0.17(4.3)	0.56(14.3)
3/8	7/16-20	-MAD-FTD6-ST7	1.46(37.1)	0.36(9.1)	0.20(5.1)	0.56(14.3)
3/8	9/16-18	-MAD-FTD6-ST9	1.52(38.6)	0.39(9.9)	0.27(6.9)	0.69(17.5)
3/8	3/4-16	-MAD-FTD6-ST12	1.60(40.6)	0.44(11.2)	0.27(6.9)	0.87(22.2)
1/2	9/16-18	-MAD-FTD8-ST9	1.74(44.2)	0.39(9.9)	0.28(7.1)	0.69(17.5)
1/2	3/4-16	-MAD-FTD8-ST12	1.82(46.2)	0.44(11.2)	0.37(9.4)	0.87(22.2)
5/8	7/8-14	-MAD-FTD10-ST14	1.94(49.3)	0.50(12.7)	0.47(11.9)	1.00(25.4)
3/4	1 1/16-12	-MAD-FTD12-ST17	2.10(53.3)	0.59(15.0)	0.58(14.7)	1.25(31.8)
1	1 5/16-12	-MAD-FTD16-ST21	2.41(61.2)	0.59(15.0)	0.80(20.3)	1.50(38.1)

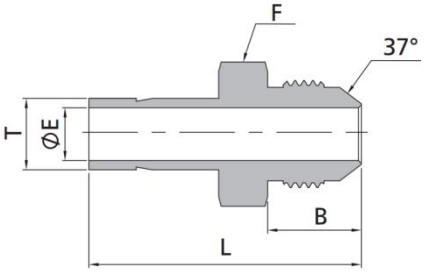

Fractional Tube to Flared

T-Tube O.D.(in.)	Tube Flared Size	Basic Ordering Number	Dimension, in. (mm)			
			L	B	E	F
1/4	1/4	-MAD-FTD4-AN4	1.46(37.1)	0.55(14.0)	0.17(4.3)	0.50(12.7)
3/8	1/4	-MAD-FTD6-AN4	1.53(38.9)	0.55(14.0)	0.17(4.3)	0.50(12.7)
3/8	3/8	-MAD-FTD6-AN6	1.56(39.6)	0.56(14.2)	0.27(6.9)	0.63(15.9)
1/2	1/2	-MAD-FTD8-AN8	1.91(48.5)	0.66(16.8)	0.37(9.4)	0.81(20.6)
3/4	3/4	-MAD-FTD12-AN12	2.21(56.1)	0.86(21.8)	0.58(14.7)	1.13(28.6)
1	1	-MAD-FTD16-AN16	2.58(65.5	0.91(23.1)	0.80(20.3)	1.37(34.9)

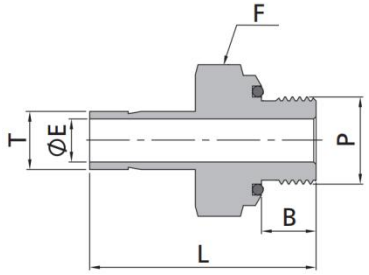

Fractional Tube to SAE/MS Thread

T-Tube O.D.(in.)	P-SAE/MS Thread	Basic Ordering Number	Dimension, in. (mm)			
			L	B	E	F
1/8	5/16-24	-MAD-FTD2-OS5	1.28(32.5)	0.34(8.6)	0.08(2.0)	0.56(14.3)
3/16	3/8-24	-MAD-FTD3-OS6	1.38(35.1)	0.38(9.7)	0.12(3.0)	0.63(15.9)
1/4	7/16-20	-MAD-FTD4-OS7	1.54(39.1)	0.41(10.4)	0.17(4.3)	0.75(19.1)
5/16	1/2-20	-MAD-FTD5-OS8	1.64(41.7)	0.44(11.2)	0.22(5.6)	0.87(22.2)
3/8	9/16-18	-MAD-FTD6-OS9	1.70(43.2)	0.47(11.9)	0.27(6.9)	0.94(23.8)
1/2	3/4-16	-MAD-FTD8-OS12	1.95(49.5)	0.47(11.9)	0.37(9.4)	1.13(28.6)

Female Adaptors

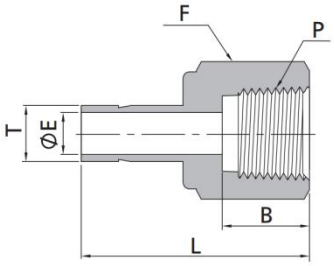

1" and below

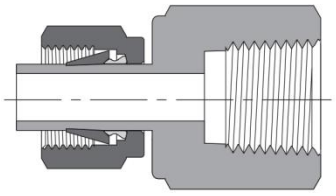

1 1/4" and above

Fractional Tube to NPT Thread

T-Tube O.D.(in.)	P-NPT Size	Basic Ordering Number	Dimension, in. (mm)			
			L	B	E	F
1/16	1/8	-FAD-FTD1-FN2	1.07(27.2)	0.41(10.4)	0.03(0.8)	0.56(14.3)
1/8	1/8	-FAD-FTD2-FN2	1.24(31.5)	0.41(10.4)	0.08(2.0)	0.56(14.3)
1/8	1/4	-FAD-FTD2-FN4	1.39(35.3)	0.59(15.0)	0.08(2.0)	0.75(19.1)
3/16	1/8	-FAD-FTD3-FN2	1.25(31.8)	0.41(10.4)	0.11(2.9)	0.56(14.3)
3/16	1/4	-FAD-FTD3-FN4	1.41(35.8)	0.59(15.0)	0.12(3.0)	0.75(19.1)
1/4	1/8	-FAD-FTD4-FN2	1.30(33.0)	0.41(10.4)	0.17(4.3)	0.56(14.3)
1/4	1/4	-FAD-FTD4-FN4	1.46(37.1)	0.59(15.0)	0.17(4.3)	0.75(19.1)
1/4	3/8	-FAD-FTD4-FN6	1.55(39.4)	0.59(15.0)	0.17(4.3)	0.87(22.2)
1/4	1/2	-FAD-FTD4-FN8	1.79(45.5)	0.78(19.8)	0.17(4.3)	1.06(27.0)
5/16	1/8	-FAD-FTD5-FN2	1.34(34.0)	0.41(10.4)	0.22(5.6)	0.56(14.3)
5/16	1/4	-FAD-FTD5-FN4	1.48(37.6)	0.59(15.0)	0.22(5.6)	0.75(19.1)
5/16	3/8	-FAD-FTD5-FN6	1.59(40.4)	0.59(15.0)	0.22(5.6)	0.87(22.2)
3/8	1/8	-FAD-FTD6-FN2	1.35(34.3)	0.41(10.4)	0.27(6.9)	0.56(14.3)
3/8	1/4	-FAD-FTD6-FN4	1.50(38.1)	0.59(15.0)	0.27(6.9)	0.75(19.1)
3/8	3/8	-FAD-FTD6-FN6	1.59(40.4)	0.59(15.0)	0.27(6.9)	0.87(22.2)
3/8	1/2	-FAD-FTD6-FN8	1.84(46.7)	0.78(19.8)	0.27(6.9)	1.06(27.0)
1/2	1/4	-FAD-FTD8-FN4	1.71(43.4)	0.59(15.0)	0.37(9.4)	0.75(19.1)
1/2	3/8	-FAD-FTD8-FN6	1.79(45.5)	0.59(15.0)	0.37(9.4)	0.87(22.2)
1/2	1/2	-FAD-FTD8-FN8	2.04(51.8)	0.78(19.8)	0.37(9.4)	1.06(27.0)
5/8	3/8	-FAD-FTD10-FN6	1.86(47.2)	0.59(15.0)	0.47(11.9)	0.87(22.2)
5/8	1/2	-FAD-FTD10-FN8	2.09(53.1)	0.78(19.8)	0.47(11.9)	1.06(27.0)
3/4	1/2	-FAD-FTD12-FN8	2.08(52.8)	0.78(19.8)	0.58(14.7)	1.06(27.0)
3/4	3/4	-FAD-FTD12-FN12	2.16(54.9)	0.81(20.6)	0.58(14.7)	1.31(33.3)
3/4	1	-FAD-FTD12-FN16	2.30(58.4)	1.00(25.4)	0.58(14.7)	1.63(41.3)
7/8	3/4	-FAD-FTD14-FN12	2.22(56.4)	0.81(20.6)	0.58(14.7)	1.31(33.3)
1	3/4	-FAD-FTD16-FN12	2.39(60.7)	0.81(20.6)	0.80(20.3)	1.31(33.3)
1	1	-FAD-FTD16-FN16	2.53(64.3)	1.00(25.4)	0.80(20.3)	1.63(41.3)
1 1/4	1 1/4	-FAD-FTD20-FN20	3.06(77.7)	1.00(25.4)	1.02(25.9)	2.13(54.0)
1 1/2	1 1/2	-FAD-FTD24-FN24	3.50(88.9)	1.09(27.7)	1.25(31.8)	2.37(60.3)

Fractional Tube to ISO Parallel Thread

T-Tube O.D.(in.)	P-RT Size	Basic Ordering Number	Dimension, in. (mm)			
			L	B	E	F
1/4	1/8	-FAD-FTD4-FR2	1.30(33.0)	0.41(10.4)	0.17(4.3)	0.56(14.3)
1/4	1/4	-FAD-FTD4-FR4	1.45(36.8)	0.59(15.0)	0.17(4.3)	0.75(19.1)
3/8	1/4	-FAD-FTD6-FR4	1.50(38.1)	0.59(15.0)	0.27(6.9)	0.75(19.1)
3/8	3/8	-FAD-FTD6-FR6	1.59(40.4)	0.59(15.0)	0.27(6.9)	0.87(22.2)
1/2	1/4	-FAD-FTD8-FR4	1.71(43.4)	0.59(15.0)	0.37(9.4)	0.75(19.1)
1/2	3/8	-FAD-FTD8-FR6	1.80(45.7)	0.59(15.0)	0.37(9.4)	0.87(22.2)
1/2	1/2	-FAD-FTD8-FR8	2.05(52.1)	0.78(19.8)	0.37(9.4)	1.06(27.0)

Female Adaptors

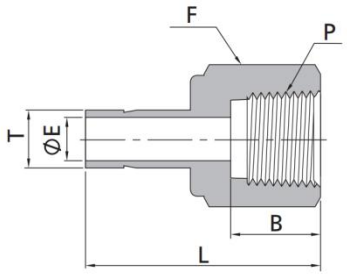

Metricl Tube to NPT Thread

T-Tube O.D.(in.)	P-NPT Size	Basic Ordering Number	Dimension, mm (in.)			
			L	B	E	F
3	1/8	-FAD-MTD3-FN2	28.8(1.13)	10.4(0.41)	1.3(0.05)	14.0(0.55)
4	1/8	-FAD-MTD4-FN2	33.3(1.31)	10.4(0.41)	2.0(0.08)	14.0(0.55)
6	1/8	-FAD-MTD6-FN2	32.5(1.28)	10.4(0.41)	4.1(0.16)	14.0(0.55)
6	1/4	-FAD-MTD6-FN4	37.1(1.46)	15.0(0.59)	4.1(0.16)	19.0(0.75)
8	1/8	-FAD-MTD8-FN2	35.1(1.38)	10.4(0.41)	6.4(0.25)	14.0(0.55)
8	1/4	-FAD-MTD8-FN4	37.6(1.48)	15.0(0.59)	5.6(0.22)	19.0(0.75)
8	3/8	-FAD-MTD8-FN6	36.5(1.44)	15.0(0.59)	6.4(0.25)	22.0(0.87)
10	1/4	-FAD-MTD10-FN4	38.1(1.50)	15.0(0.59)	7.1(0.28)	19.0(0.75)
10	3/8	-FAD-MTD10-FN6	40.1(1.58)	15.0(0.59)	7.1(0.28)	22.0(0.87)
10	1/2	-FAD-MTD10-FN8	46.5(1.83)	19.8(0.78)	7.1(0.28)	27.0(1.06)
12	1/4	-FAD-MTD12-FN4	43.7(1.72)	15.0(0.59)	8.8(0.35)	19.0(0.75)
12	3/8	-FAD-MTD12-FN6	42.9(1.69)	15.0(0.59)	9.1(0.36)	22.0(0.87)
12	1/2	-FAD-MTD12-FN8	52.3(2.06)	19.8(0.78)	8.8(0.35)	27.0(1.06)
16	1/2	-FAD-MTD16-FN8	49.2(1.94)	19.8(0.78)	12.7(0.50)	27.0(1.06)
18	3/4	-FAD-MTD18-FN12	52.4(2.06)	20.6(0.81)	14.0(0.55)	32.0(1.26)
20	1/2	-FAD-MTD20-FN8	50.0(1.97)	19.8(0.78)	15.0(0.59)	27.0(1.06)
20	3/4	-FAD-MTD20-FN12	53.2(2.09)	20.6(0.81)	15.1(0.59)	32.0(1.26)
25	1	-FAD-MTD25-FN16	66.7(2.63)	25.4(1.00)	19.8(0.78)	41.0(1.61)

Metricl Tube to ISO Parallel Thread

T-Tube O.D.(in.)	P-RT Size	Basic Ordering Number	Dimension, mm (in.)			
			L	B	E	F
3	1/8	-FAD-MTD3-FR2	27.8(1.09)	10.4(0.41)	1.8(0.07)	14.0(0.55)
4	1/8	-FAD-MTD4-FR2	28.6(1.13)	10.4(0.41)	2.0(0.08)	14.0(0.55)
6	1/8	-FAD-MTD6-FR2	33.0(1.30)	10.4(0.41)	4.1(0.16)	14.0(0.55)
8	1/4	-FAD-MTD8-FR4	37.6(1.48)	15.0(0.59)	5.6(0.22)	19.0(0.75)
10	1/4	-FAD-MTD10-FR4	38.1(1.50)	15.0(0.59)	7.1(0.28)	19.0(0.75)
10	3/8	-FAD-MTD10-FR6	36.5(1.44)	15.0(0.59)	7.5(0.30)	22.0(0.87)
10	1/2	-FAD-MTD10-FR8	41.3(1.63)	19.8(0.78)	7.5(0.30)	27.0(1.06)
12	1/4	-FAD-MTD12-FR4	40.5(1.59)	15.0(0.59)	9.1(0.36)	19.0(0.75)
12	3/8	-FAD-MTD12-FR6	43.7(1.72)	15.0(0.59)	9.1(0.36)	22.0(0.87)
12	1/2	-FAD-MTD12-FR8	46.8(1.84)	19.8(0.78)	9.1(0.36)	27.0(1.06)
16	1/2	-FAD-MTD16-FR8	48.4(1.91)	19.8(0.78)	12.7(0.50)	27.0(1.06)
18	3/4	-FAD-MTD18-FR12	52.4(2.06)	20.6(0.81)	14.0(0.55)	32.0(1.26)
20	3/4	-FAD-MTD20-FR12	53.2(2.09)	20.6(0.81)	15.1(0.59)	32.0(1.26)
25	1	-FAD-MTD25-FR16	66.7(2.63)	25.4(1.00)	19.8(0.78)	41.0(1.61)

Female Adaptors

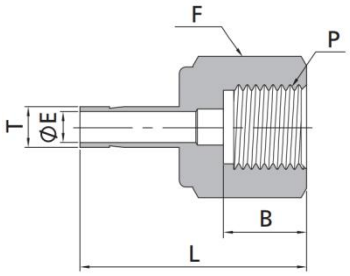

Metricl Tube to ISO Parallel Thread						
T-Tube O.D.(in.)	P-BSP Size	Basic Ordering Number	Dimension, mm (in.)			
			L	B	E	F
3	1/8	-FAD-MTD3-FG2	28.6(1.13)	6.5(0.26)	1.6(0.06)	14.0(0.55)
3	1/4	-FAD-MTD3-FG4	33.5(1.32)	10.2(0.40)	1.9(0.07)	19.0(0.75)
4	1/8	-FAD-MTD4-FG2	29.4(1.16)	6.5(0.26)	2.0(0.08)	14.0(0.55)
6	1/8	-FAD-MTD6-FG2	31.0(1.22)	6.5(0.26)	4.1(0.16)	14.0(0.55)
6	1/4	-FAD-MTD6-FG4	35.3(1.39)	10.2(0.40)	4.1(0.16)	19.0(0.75)
6	3/8	-FAD-MTD6-FG6	38.4(1.51)	14.2(0.56)	4.1(0.16)	24.0(0.94)
6	1/2	-FAD-MTD6-FG8	42.9(1.69)	18.0(0.71)	4.1(0.16)	27.0(1.06)
8	1/4	-FAD-MTD8-FG4	33.0(1.30)	10.2(0.40)	5.5(0.22)	19.0(0.75)
8	3/8	-FAD-MTD8-FG6	38.9(1.53)	14.2(0.56)	5.6(0.22)	24.0(0.94)
8	1/2	-FAD-MTD8-FG8	43.7(1.72)	18.0(0.71)	5.6(0.22)	27.0(1.06)
10	1/4	-FAD-MTD10-FG4	34.5(1.36)	10.2(0.40)	5.5(0.22)	19.0(0.75)
10	3/8	-FAD-MTD10-FG6	36.1(1.42)	14.2(0.56)	6.5(0.26)	24.0(0.94)
10	1/2	-FAD-MTD10-FG8	41.1(1.62)	18.0(0.71)	7.1(0.28)	27.0(1.06)
12	1/4	-FAD-MTD12-FG4	41.1(1.62)	10.2(0.40)	5.5(0.22)	19.0(0.75)
12	3/8	-FAD-MTD12-FG6	44.7(1.76)	14.2(0.56)	6.5(0.26)	24.0(0.94)
12	1/2	-FAD-MTD12-FG8	48.8(1.92)	18.0(0.71)	7.0(0.28)	27.0(1.06)
16	1/2	-FAD-MTD16-FG8	49.0(1.93)	18.0(0.71)	7.0(0.28)	27.0(1.06)
18	1/2	-FAD-MTD18-FG8	49.3(1.94)	18.0(0.71)	7.0(0.28)	27.0(1.06)

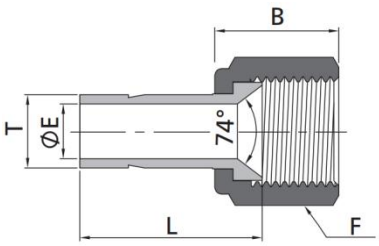

Fractional Tube to Flraed						
T-Tube O.D.(in.)	Tube Flared Size	Basic Ordering Number	Dimension, in. (mm)			
			L	B	E	F
1/8	1/8	-FAD-FTD2-FAN2	0.88(22.4)	0.55(14.0)	0.09(2.4)	0.37(9.5)
1/8	1/4	-FAD-FTD2-FAN4	0.88(22.4)	0.62(15.8)	0.09(2.4)	0.56(14.3)
1/4	1/4	-FAD-FTD4-FAN4	0.96(24.4)	0.62(15.8)	0.18(4.6)	0.56(14.3)
3/8	3/8	-FAD-FTD6-FAN6	1.11(28.1)	0.73(18.5)	0.28(7.1)	0.69(17.5)
1/2	1/2	-FAD-FTD8-FAN8	1.42(36.1)	0.85(21.6)	0.39(9.9)	0.87(22.2)
3/4	3/4	-FAD-FTD12-FAN12	1.49(37.8)	1.03(26.2)	0.58(14.7)	1.25(31.8)

Weld Adaptors

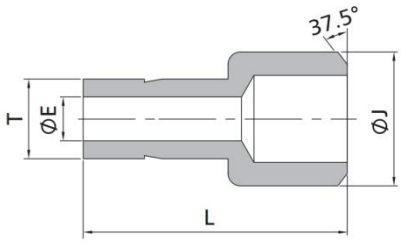

Fractional Tube to Pipe Weld					
T-Tube O.D. (in.)	Pipe Weld Size	Basic Ordering Number	Dimension, in. (mm)		
			L	J	E
1/4	1/4	-WAD-FTD4-BW4	1.14(29.0)	0.54(13.7)	0.17(4.3)
3/8	1/2	-WAD-FTD6-BW8	1.46(37.1)	0.84(21.3)	0.27(6.9)
1/2	1/2	-WAD-FTD8-BW8	1.66(42.2)	0.84(21.3)	0.37(9.4)
1/2	3/4	-WAD-FTD8-BW12	1.68(42.7)	1.05(26.7)	0.37(9.4)
3/4	3/4	-WAD-FTD12-BW12	1.87(47.5)	1.05(26.7)	0.58(14.7)

Weld Connectors

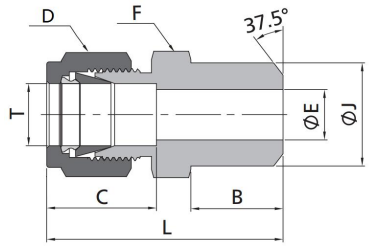

Fractional Tube to Pipe Butt Weld									
T-Tube O.D.(in.)	Pipe Weld SIZE	Basic Ordering Number	Dimension,in(mm)						
			L	C	D	F	E	B	J
1/8	1/8	-WDC-FT2-BW2	1.20(30.5)	0.50(12.7)	0.44(11.1)	0.44(11.1)	0.09(2.3)	0.38(9.7)	0.41(10.3)
3/16	1/8	-WDC-FT3-BW2	1.23(31.2)	0.54(13.7)	0.50(12.7)	0.44(11.1)	0.12(3.0)	0.38(9.7)	0.41(10.3)
1/4	1/8	-WDC-FT4-BW2	1.29(32.8)	0.60(15.2)	0.56(14.3)	0.50(12.7)	0.19(4.8)	0.38(9.7)	0.41(10.3)
1/4	1/4	-WDC-FT4-BW4	1.49(37.8)	0.60(15.2)	0.56(14.3)	0.56(14.3)	0.19(4.8)	0.56(14.2)	0.54(13.7)
5/16	1/8	-WDC-FT5-BW2	1.34(34.0)	0.64(16.3)	0.63(15.9)	0.56(14.3)	0.21(5.3)	0.38(9.7)	0.41(10.3)
5/16	1/4	-WDC-FT5-BW4	1.52(38.6)	0.64(16.3)	0.63(15.9)	0.56(14.3)	0.25(6.4)	0.56(14.2)	0.54(13.7)
3/8	1/4	-WDC-FT6-BW4	1.57(39.9)	0.66(16.8)	0.69(17.5)	0.63(15.9)	0.28(7.1)	0.56(14.2)	0.54(13.7)
3/8	3/8	-WDC-FT6-BW6	1.57(39.9)	0.66(16.8)	0.69(17.5)	0.69(17.5)	0.28(7.1)	0.56(14.2)	0.67(17.1)
3/8	1/2	-WDC-FT6-BW8	1.82(46.2)	0.66(16.8)	0.69(17.5)	0.87(22.2)	0.28(7.1)	0.75(19.1)	0.84(21.3)
3/8	3/4	-WDC-FT6-BW12	1.88(47.8)	0.66(16.8)	0.69(17.5)	1.06(27.0)	0.28(7.1)	0.75(19.1)	1.05(26.7)
1/2	3/8	-WDC-FT8-BW6	1.71(43.4)	0.90(22.9)	0.87(22.2)	0.81(20.6)	0.41(10.4)	0.56(14.2)	0.67(17.1)
1/2	1/2	-WDC-FT8-BW8	1.93(49.0)	0.90(22.9)	0.87(22.2)	0.87(22.2)	0.41(10.4)	0.75(19.1)	0.84(21.3)
1/2	3/4	-WDC-FT8-BW12	1.99(50.5)	0.90(22.9)	0.87(22.2)	1.06(27.0)	0.41(10.4)	0.75(19.1)	1.05(26.7)
5/8	1/2	-WDC-FT10-BW8	1.93(49.0)	0.96(24.4)	1.00(25.4)	0.94(23.8)	0.50(12.7)	0.75(19.1)	0.84(21.3)
3/4	1/2	-WDC-FT12-BW8	1.99(50.5)	0.96(24.4)	1.13(28.6)	1.06(27.0)	0.55(14.0)	0.75(19.1)	0.84(21.3)
3/4	3/4	-WDC-FT12-BW12	1.99(50.5)	0.96(24.4)	1.10(28.0)	1.06(27.0)	0.62(15.7)	0.75(19.1)	1.05(26.7)
1	1	-WDC-FT16-BW16	2.45(62.2)	1.23(31.2)	1.50(38.1)	1.37(34.9)	0.88(22.4)	0.94(23.9)	1.31(33.4)
1 1/4	1 1/4	-WDC-FT20-BW20	3.04(77.2)	1.62(41.1)	1.87(47.6)	1.75(44.5)	1.09(27.7)	0.94(23.9)	1.66(42.2)
1 1/2	1 1/2	-WDC-FT24-BW24	3.50(88.9)	1.97(50.0)	2.25(57.2)	2.13(54.0)	1.34(34.0)	1.03(26.2)	1.90(48.3)

Weld Connectors

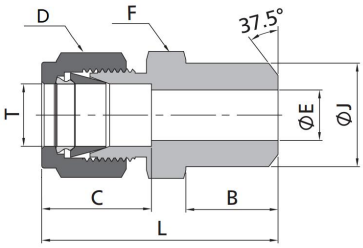

Metric Tube to Pipe Butt Weld

T-Tube O.D.(mm)	Pipe Weld SIZE	Basic Ordering Number	Dimension,mm(in)						
			L	C	D	F	E	B	J
3	1/8	-WDC-MT3-BW2	30.5(1.20)	12.9(0.51)	12.0(0.47)	12.0(0.47)	2.4(0.09)	9.7(0.38)	10.3(0.41)
4	1/8	-WDC-MT4-BW2	31.5(1.24)	13.7(0.54)	12.0(0.47)	12.0(0.47)	2.4(0.09)	9.7(0.38)	10.3(0.41)
6	1/8	-WDC-MT6-BW2	32.8(1.29)	15.3(0.60)	14.0(0.55)	14.0(0.55)	4.8(0.19)	9.7(0.38)	10.3(0.41)
6	1/4	-WDC-MT6-BW4	37.9(1.49)	15.3(0.60)	14.0(0.55)	14.0(0.55)	4.8(0.19)	14.2(0.56)	13.7(0.54)
8	1/8	-WDC-MT8-BW2	34.2(1.35)	16.2(0.64)	16.0(0.63)	15.0(0.59)	5.4(0.21)	9.7(0.38)	10.3(0.41)
8	1/4	-WDC-MT8-BW4	38.7(1.52)	16.2(0.64)	16.0(0.63)	15.0(0.59)	6.4(0.25)	14.2(0.56)	13.7(0.54)
8	1/2	-WDC-MT8-BW8	45.6(1.80)	16.2(0.64)	16.0(0.63)	22.0(0.87)	6.4(0.25)	19.1(0.75)	21.3(0.84)
10	1/4	-WDC-MT10-BW4	40.9(1.60)	17.2(0.70)	19.0(0.75)	18.0(0.71)	7.5(0.30)	14.2(0.56)	13.7(0.54)
10	3/8	-WDC-MT10-BW6	40.9(1.60)	17.2(0.70)	19.0(0.75)	18.0(0.71)	7.9(0.31)	14.2(0.56)	17.1(0.67)
10	1/2	-WDC-MT10-BW8	46.5(1.80)	17.2(0.70)	19.0(0.75)	22.0(0.87)	7.9(0.31)	19.1(0.75)	21.3(0.84)
12	1/4	-WDC-MT12-BW4	43.4(1.70)	22.8(0.90)	22.0(0.87)	22.0(0.87)	7.5(0.30)	14.2(0.56)	13.7(0.54)
12	3/8	-WDC-MT12-BW6	43.4(1.70)	22.8(0.90)	22.0(0.87)	22.0(0.87)	9.5(0.37)	14.2(0.56)	17.1(0.67)
12	1/2	-WDC-MT12-BW8	49.0(1.90)	22.8(0.90)	22.0(0.87)	22.0(0.87)	9.5(0.37)	19.1(0.75)	21.3(0.84)
14	3/8	-WDC-MT14-BW6	44.1(1.70)	24.4(1.00)	25.0(0.98)	24.0(0.94)	10.7(0.42)	14.2(0.56)	17.1(0.67)
15	1/2	-WDC-MT15-BW8	49.0(1.90)	24.4(1.00)	25.0(0.98)	24.0(0.94)	11.9(0.47)	19.1(0.75)	21.3(0.84)
16	1/2	-WDC-MT16-BW8	49.0(1.90)	24.4(1.00)	25.0(0.98)	24.0(0.94)	12.7(0.50)	19.1(0.75)	21.3(0.84)
18	1/2	-WDC-MT18-BW8	50.5(2.00)	24.4(1.00)	30.0(1.18)	27.0(1.06)	13.9(0.55)	19.1(0.75)	21.3(0.84)
30	1 1/4	-WDC-MT30-BW20	77.2(3.00)	39.6(1.60)	50.0(1.97)	46.0(1.81)	26.2(1.03)	23.9(0.94)	42.2(1.66)
32	1 1/4	-WDC-MT32-BW20	79.6(3.10)	42.0(1.70)	50.0(1.97)	46.0(1.81)	28.6(1.13)	23.9(0.94)	42.2(1.66)
38	1 1/2	-WDC-MT38-BW24	91.6(3.60)	49.4(1.90)	60.0(2.36)	55.0(2.17)	33.7(1.33)	26.2(1.03)	48.3(1.9)

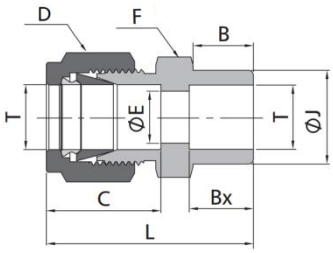

Metric Tube to Tube Socket Weld

T-Tube O.D.(mm)	Basic Ordering Number	Dimension,mm(in)							
		L	C	D	F	B	E	Bx	J
1/8	-WDC-FT2-SW2	1.14(29.0)	0.50(12.7)	0.44(11.1)	0.44(11.1)	0.34(8.6)	0.09(2.3)	0.10(2.5)	0.31(7.9)
3/16	-WDC-FT3-SW3	1.17(29.7)	0.54(13.7)	0.50(12.7)	0.44(11.1)	0.37(9.5)	0.13(3.3)	0.19(4.8)	0.42(10.7)
1/4	-WDC-FT4-SW4	1.32(33.5)	0.60(15.2)	0.56(14.3)	0.50(12.7)	0.41(10.4)	0.19(4.8)	0.28(7.1)	0.44(11.2)
3/8	-WDC-FT6-SW6	1.48(37.6)	0.66(16.8)	0.69(17.5)	0.63(15.9)	0.47(11.9)	0.28(7.1)	0.31(7.9)	0.62(15.7)
1/2	-WDC-FT8-SW8	1.62(41.1)	0.90(22.9)	0.87(22.2)	0.81(20.6)	0.47(11.9)	0.41(10.4)	0.38(9.7)	0.75(19.1)
5/8	-WDC-FT10-SW10	1.65(41.9)	0.96(24.4)	1.00(25.4)	0.94(23.8)	0.47(11.9)	0.50(12.7)	0.41(10.4)	0.92(23.4)
3/4	-WDC-FT12-SW12	1.71(43.4)	0.96(24.4)	1.13(28.6)	1.06(27.0)	0.47(11.9)	0.62(15.7)	0.44(11.1)	1.05(26.7)
1	-WDC-FT16-SW16	2.07(52.6)	1.23(31.2)	1.50(38.1)	1.37(34.9)	0.56(14.2)	0.88(22.4)	0.62(15.7)	1.31(33.3)

Weld Elbows

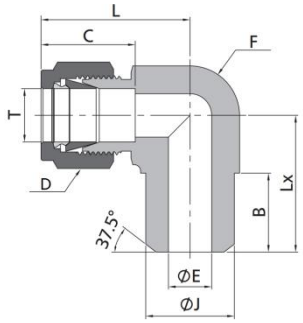

Fractional Tube to Pipe Butt Weld

T-Tube O.D.(in.)	Pipe Weld SIZE	Basic Ordering Number	Dimension,in(mm)							
			L	C	D	F	B	E	Lx	J
1/8	1/8	-WDE-FT2-BW2	0.92(23.4)	0.50(12.7)	0.44(11.1)	0.44(11.1)	0.38(9.7)	0.09(2.3)	0.72(18.3)	0.41(10.3)
3/16	1/8	-WDE-FT3-BW2	1.01(25.7)	0.54(13.7)	0.50(12.7)	0.50(12.7)	0.38(9.7)	0.13(3.3)	0.74(18.8)	0.41(10.3)
1/4	1/8	-WDE-FT4-BW2	1.06(26.9)	0.60(15.2)	0.56(14.3)	0.50(12.7)	0.38(9.7)	0.19(4.8)	0.74(18.8)	0.41(10.3)
1/4	1/4	-WDE-FT4-BW4	1.06(26.9)	0.60(15.2)	0.56(14.3)	0.50(12.7)	0.56(14.2)	0.19(4.8)	0.92(23.4)	0.54(13.7)
3/8	1/4	-WDE-FT6-BW4	1.20(30.5)	0.66(16.8)	0.69(17.5)	0.63(15.9)	0.56(14.2)	0.28(7.1)	1.00(25.4)	0.54(13.7)
1/2	3/8	-WDE-FT8-BW6	1.37(34.8)	0.90(22.9)	0.87(22.2)	0.75(19.1)	0.56(14.2)	0.41(10.4)	1.13(28.8)	0.67(17.1)
1/2	1/2	-WDE-FT8-BW8	1.42(36.1)	0.90(22.9)	0.87(22.2)	0.81(20.6)	0.75(19.1)	0.41(10.4)	1.30(33.0)	0.84(21.3)
5/8	1/2	-WDE-FT10-BW8	1.57(36.3)	0.96(24.4)	1.00(25.4)	0.94(23.8)	0.75(19.1)	0.50(12.7)	1.38(35.1)	0.84(21.3)
3/4	3/4	-WDE-FT12-BW12	1.94(39.9)	0.96(24.4)	1.13(28.6)	1.06(27.0)	0.75(19.1)	0.62(15.7)	1.45(36.8)	1.05(26.7)
1	3/4	-WDE-FT16-BW12	1.94(49.3)	1.23(31.2)	1.50(38.1)	1.37(34.9)	0.75(19.1)	0.88(22.4)	1.65(41.9)	1.05(26.7)
1	1	-WDE-FT16-BW16	1.94(49.3)	1.23(31.2)	1.50(38.1)	1.37(34.9)	0.81(20.6)	0.88(22.4)	1.84(46.7)	1.31(33.4)

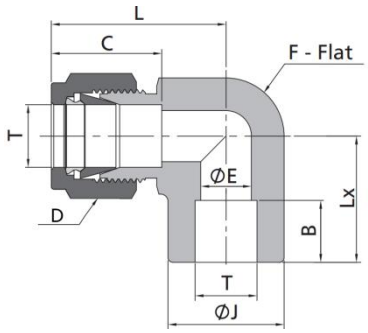

Fractional Tube to Tube Socket Weld

T-Tube O.D.(in.)	Basic Ordering Number	Dimension,in(mm)							
		L	C	D	F	B	E	Lx	J
1/8	-WDE-FT2-BW2	0.66(16.8)	0.50(12.7)	0.44(11.1)	0.37(9.5)	0.10(2.5)	0.09(2.3)	0.63(16.0)	0.38(9.7)
3/16	-WDE-FT3-BW3	0.72(18.3)	0.54(13.7)	0.50(12.7)	0.44(11.1)	0.19(4.8)	0.13(3.3)	0.69(17.5)	0.44(11.2)
1/4	-WDE-FT4-BW4	1.06(26.9)	0.60(15.2)	0.56(14.3)	0.50(12.7)	0.28(7.1)	0.19(4.8)	0.77(19.6)	0.50(12.7)
3/8	-WDE-FT6-BW6	1.20(30.5)	0.66(16.8)	0.69(17.5)	0.63(15.9)	0.31(7.9)	0.28(7.1)	0.91(23.1)	0.62(15.7)
1/2	-WDE-FT8-BW8	1.42(36.1)	0.90(22.9)	0.87(22.2)	0.81(20.6)	0.38(9.7)	0.41(10.4)	1.02(25.9)	0.81(20.6)
5/8	-WDE-FT10-BW10	1.16(29.5)	0.96(24.4)	1.00(25.4)	1.06(27.0)	0.41(10.4)	0.50(12.7)	1.16(29.5)	0.94(23.9)
3/4	-WDE-FT12-BW12	1.57(39.9)	0.96(24.4)	1.13(28.6)	1.06(27.0)	0.44(11.2)	0.62(15.7)	1.17(29.7)	1.06(26.9)
1	-WDE-FT16-BW16	1.93(49.0)	1.23(31.2)	1.50(38.1)	1.37(34.9)	0.62(15.7)	0.88(22.4)	1.45(36.8)	1.38(35.1)

Vents Protectors

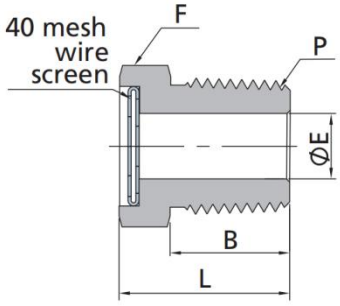

T-Tube O.D. (in.)	Basic Ordering Number	Dimension, in. (mm)			
		L	C	E	D
1/8	-VP-MN2	0.56(14.2)	0.50(12.7)	0.38(9.7)	0.19(4.8)
1/4	-VP-MN4	0.78(19.8)	0.56(14.3)	0.56(14.2)	0.28(7.1)
3/8	-VP-MN6	0.81(20.6)	0.69(17.5)	0.56(14.2)	0.41(10.4)
1/2	-VP-MN8	1.03(26.2)	0.87(22.2)	0.75(19.1)	0.50(12.7)
3/4	-VP-MN12	1.06(26.9)	1.06(27.0)	0.76(19.2)	0.72(18.3)
1	-VP-MN16	1.37(34.8)	1.37(34.9)	0.94(23.9)	0.88(22.4)

Lapped Flange Connectors

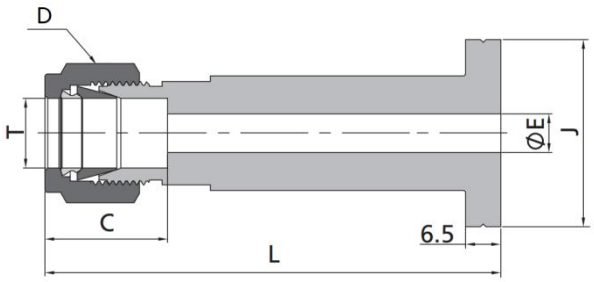

Fractional Tube

T-Tube O.D.(in.)	Flange Seal	Basic Ordering Number	Dimension, in. (mm)				
			L	D	C	E	J
1/4	A	-LFC-FT4A	3.18(80.8)	0.56(14.3)	0.60(15.2)	0.60(15.2)	1.36(34.5)
1/4	B	-LFC-FT4B	3.18(80.8)	0.56(14.3)	0.60(15.2)	0.19(4.8)	1.36(34.5)
3/8	A	-LFC-FT6A	3.26(82.9)	0.69(17.5)	0.66(16.8)	0.28(7.1)	1.36(34.5)
3/8	B	-LFC-FT6B	3.26(82.9)	0.69(17.5)	0.66(16.8)	0.28(7.1)	1.36(34.5)
1/2	A	-LFC-FT8A	3.35(85.1)	0.87(22.2)	0.90(22.9)	0.31(7.9)	1.36(34.5)
1/2	B	-LFC-FT8B	3.35(85.1)	0.87(22.2)	0.90(22.9)	0.31(7.9)	1.36(34.5)

Metric Tube

T-Tube O.D.(mm)	Flange Seal	Basic Ordering Number	Dimension,mm (in.)				
			L	D	C	E	J
10	A	-LFC-MT10A	82.6(3.25)	19.0(0.75)	17.2(0.68)	7.9(0.31)	34.5(1.36)
10	B	-LFC-MT10B	82.6(3.25)	19.0(0.75)	17.2(0.68)	7.9(0.31)	34.5(1.36)

Flange Adaptors

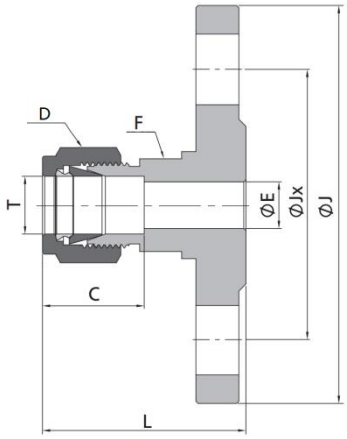

Fractional Tube to ANSI Flanges B16.5

T-Tube O.D. (in.)	ANSI Flange NPS	Class	Basic Ordering Number Raised Face Flange	Dimension, in. (mm)						
				L	J	Jx	E	C	G	F
1/4	1/2	150	-FGA-FT4-F8-150	1.61(40.9)	3.50(88.9)	2.38(60.5)	0.19(4.8)	0.60(15.2)	0.56(14.3)	0.81(20.6)
3/8	1/2	300	-FGA-FT6-F8-300	1.79(45.5)	3.75(95.3)	2.62(66.5)	0.28(7.1)	0.66(16.8)	0.69(17.5)	0.81(20.6)
1/2	1/2	150	-FGA-FT8-F8-150	1.78(45.2)	3.50(88.9)	2.38(60.5)	0.41(10.4)	0.90(22.9)	0.87(22.2)	0.81(20.6)
1/2	1	150	-FGA-FT8-F16-150	1.90(48.3)	4.25(108.0)	3.12(79.2)	0.41(10.4)	0.90(22.9)	0.87(22.2)	0.81(20.6)
1/2	2	150	-FGA-FT8-F32-150	2.09(53.1)	6.00(152.4)	4.76(121.0)	0.41(10.4)	0.90(22.9)	0.87(22.2)	0.81(20.6)
3/4	1	150	-FGA-FT12-F16-150	1.98(50.3)	4.25(108.0)	3.12(79.2)	0.62(15.7)	0.96(24.4)	1.13(28.6)	1.25(31.8)
1	1	150	-FGA-FT16-F16-150	2.38(60.5)	4.25(108.0)	3.12(79.2)	0.88(22.4)	1.23(31.2)	1.50(38.1)	1.37(34.9)

Fractional Tube to DIN Flanges PN40

T-Tube O.D. (mm)	DIN Flange Size DN	Basic Ordering Number Raised Face Flange	Dimension, in. (mm)						
			L	J	Jx	E	C	G	F
6	25	-FGA-MT6-F25-40P	47.5(1.87)	115.0(4.53)	85.0(3.35)	4.8(0.19)	15.3(0.60)	14.0(0.55)	20.0(0.79)
12	15	-FGA-MT12-F15-40P	48.5(1.91)	95.0(3.74)	65.0(2.56)	9.5(0.37)	22.8(0.90)	22.0(0.87)	20.0(0.79)
12	25	-FGA-MT12-F25-40P	50.5(1.99)	115.0(4.53)	85.0(3.35)	9.5(0.37)	22.8(0.90)	22.0(0.87)	20.0(0.79)
12	50	-FGA-MT12-F50-40P	55.3(2.18)	165.0(6.50)	125.0(4.92)	9.5(0.37)	22.8(0.90)	22.0(0.87)	20.0(0.79)
18	15	-FGA-MT18-F15-40P	51.8(2.04)	95.0(3.74)	65.0(2.56)	15.1(0.59)	24.4(0.96)	30.0(1.18)	32.0(1.26)
18	25	-FGA-MT18-F25-40P	53.8(2.12)	115.0(4.53)	85.0(3.35)	15.1(0.59)	24.4(0.96)	30.0(1.18)	32.0(1.26)
25	25	-FGA-MT25-F25-40P	64.0(2.52)	115.0(4.53)	85.0(3.35)	21.8(0.86)	31.3(1.23)	38.0(1.50)	35.0(1.38)

Fractional Tube to JIS Flanges 10K

T-Tube O.D.(in.)	JIS Flange Size DN	Basic Ordering Number Raised Face Flange	Dimension, in. (mm)						
			L	J	Jx	E	C	G	F
1/4"	15	-FGA-FT4-F15-10K	1.66(42.2)	3.74(95.0)	2.76(70.1)	0.19(4.8)	0.60(15.2)	0.56(14.3)	0.81(20.6)
3/8"	15	-FGA-FT6-F15-10K	1.72(43.7)	3.74(95.0)	2.76(70.1)	0.28(7.1)	0.66(16.8)	0.69(17.5)	0.81(20.6)
1/2"	15	-FGA-FT8-F15-10K	1.83(46.5)	3.74(95.0)	2.76(70.1)	0.41(10.4)	0.90(22.9)	0.87(22.2)	0.81(20.6)
3/4"	15	-FGA-FT12-F15-10K	1.91(48.5)	3.74(95.0)	2.76(70.1)	0.62(15.7)	0.96(24.4)	1.13(28.6)	1.25(31.8)
1"	25	-FGA-FT16-F25-10K	2.40(61.0)	4.92(125.0)	3.54(89.9)	0.88(22.4)	1.23(31.2)	1.50(38.1)	1.37(34.9)
12mm	15	-FGA-FT12-F15-10K	1.83(46.5)	3.74(95.0)	2.76(70.0)	0.37(9.5)	0.90(22.8)	0.87(22.0)	0.79(20.0)
18mm	15	-FGA-FT18-F15-10K	1.91(48.5)	3.74(95.0)	2.76(70.0)	0.59(15.1)	0.96(24.4)	1.18(30.0)	1.26(32.0)
25mm	25	-FGA-FT25-F25-10K	2.40(61.0)	4.92(125.0)	3.54(90.0)	0.86(21.8)	1.23(31.3)	1.50(38.0)	1.38(35.0)

Nuts

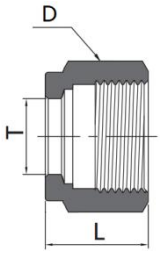

Fractional Tube

T-Tube O.D.(in.)	Basic Ordering Number	Dimension, in. (mm)	
		D	L
1/16	-TN-FT1	0.31(7.9)	0.31(7.9)
1/8	-TN-FT2	0.44(11.1)	0.47(11.9)
3/16	-TN-FT3	0.50(12.7)	0.47(11.9)
1/4	-TN-FT4	0.56(14.3)	0.50(12.7)
5/16	-TN-FT5	0.63(15.9)	0.53(13.5)
3/8	-TN-FT6	0.69(17.5)	0.56(14.2)
1/2	-TN-FT8	0.87(22.2)	0.69(17.5)
5/8	-TN-FT10	1.00(25.4)	0.69(17.5)
3/4	-TN-FT12	1.13(28.6)	0.69(17.5)
7/8	-TN-FT14	1.25(31.8)	0.69(17.5)
1	-TN-FT16	1.50(38.1)	0.81(20.6)
1 1/8	-TN-FT18	1.81(46.0)	1.21(30.8)
1 1/4	-TN-FT20	1.87(47.6)	1.25(31.8)
1 1/2	-TN-FT24	2.25(57.2)	1.50(38.1)

Metric Tube

T-Tube O.D.(mm)	Basic Ordering Number	Dimension, mm(In.)	
		D	L
2	-TN-MT2	12.0(0.47)	11.9(0.47)
3	-TN-MT3	12.0(0.47)	11.9(0.47)
4	-TN-MT4	12.0(0.47)	11.9(0.47)
6	-TN-MT6	14.0(0.55)	12.7(0.50)
8	-TN-MT8	16.0(0.63)	13.5(0.53)
10	-TN-MT10	19.0(0.75)	15.1(0.59)
12	-TN-MT12	22.0(0.87)	17.4(0.69)
14	-TN-MT14	25.0(0.98)	17.4(0.69)
15	-TN-MT15	25.0(0.98)	17.4(0.69)
16	-TN-MT16	25.0(0.98)	17.4(0.69)
18	-TN-MT18	30.0(1.18)	17.4(0.69)
20	-TN-MT20	32.0(1.26)	17.4(0.69)
22	-TN-MT22	32.0(1.26)	17.4(0.69)
25	-TN-MT25	38.0(1.50)	20.6(0.81)
28	-TN-MT28	46.0(1.81)	30.6(1.20)
30	-TN-MT30	50.0(1.97)	32.7(1.29)
32	-TN-MT32	50.0(1.97)	34.4(1.35)
38	-TN-MT38	60.0(2.36)	40.6(1.60)

Frant Ferrules

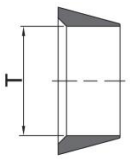

Fractional Tube

T-Tube O.D.(in.)	Basic Ordering Number
1/16	-FF-FT1
1/8	-FF-FT2
3/16	-FF-FT3
1/4	-FF-FT4
5/16	-FF-FT5
3/8	-FF-FT6
1/2	-FF-FT8
5/8	-FF-FT10
3/4	-FF-FT12
7/8	-FF-FT14
1	-FF-FT16
1 1/8	-FF-FT18
1 1/4	-FF-FT20
1 1/2	-FF-FT24

Metric Tube

T-Tube O.D.(mm)	Basic Ordering Number
2	-FF-MT2
3	-FF-MT3
4	-FF-MT4
6	-FF-MT6
8	-FF-MT8
10	-FF-MT10
12	-FF-MT12
14	-FF-MT14
15	-FF-MT15
16	-FF-MT16
18	-FF-MT18
20	-FF-MT20
22	-FF-MT22
25	-FF-MT25
28	-FF-MT28
30	-FF-MT30
32	-FF-MT32
38	-FF-MT38

Rear Ferrules

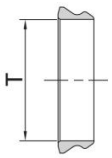

Fractional Tube

T-Tube O.D.(in.)	Basic Ordering Number
1/16	-RF-FT1
1/8	-RF-FT2
3/16	-RF-FT3
1/4	-RF-FT4
5/16	-RF-FT5
3/8	-RF-FT6
1/2	-RF-FT8
5/8	-RF-FT10
3/4	-RF-FT12
7/8	-RF-FT14
1	-RF-FT16
1 1/8	-RF-FT18
1 1/4	-RF-FT20
1 1/2	-RF-FT24

Metric Tube

T-Tube O.D.(mm)	Basic Ordering Number
2	-RF-MT2
3	-RF-MT3
4	-RF-MT4
6	-RF-MT6
8	-RF-MT8
10	-RF-MT10
12	-RF-MT12
14	-RF-MT14
15	-RF-MT15
16	-RF-MT16
18	-RF-MT18
20	-RF-MT20
22	-RF-MT22
25	-RF-MT25
28	-RF-MT28
30	-RF-MT30
32	-RF-MT32
38	-RF-MT38

Nuts+Ferrules

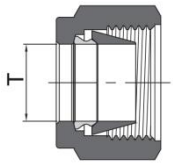

Fractional Tube		Metric Tube	
T-Tube O.D.(in.)	**Basic Ordering Number**	**T-Tube O.D.(mm)**	**Basic Ordering Number**
1/16	-NF-FT1	2	-NF-MT2
1/8	-NF-FT2	3	-NF-MT3
3/16	-NF-FT3	4	-NF-MT4
1/4	-NF-FT4	6	-NF-MT6
5/16	-NF-FT5	8	-NF-MT8
3/8	-NF-FT6	10	-NF-MT10
1/2	-NF-FT8	12	-NF-MT12
5/8	-NF-FT10	14	-NF-MT14
3/4	-NF-FT12	15	-NF-MT15
7/8	-NF-FT14	16	-NF-MT16
1	-NF-FT16	18	-NF-MT18
1 1/8	-NF-FT18*	20	-NF-MT20
1 1/4	-NF-FT20*	22	-NF-MT22
1 1/2	-NF-FT24*	25	-NF-MT25
		28	-NF-MT28*
		30	-NF-MT30*
		32	-NF-MT32*
		38	-NF-MT38*

Male Nuts

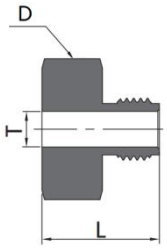

Fractional Tube				Metric Tube			
T-Tube O.D.(in.)	**Basic Ordering Number**	**Dimension, in. (mm)**		**T-Tube O.D.(mm)**	**Basic Ordering Number**	**Dimension, mm(In.)**	
		D	**L**			**D**	**L**
1/16	-TMN-FT1	0.25(6.4)	0.38(9.7)	3	-TMN-MT3	10.0(0.39)	13.5(0.53)
1/8	-TMN-FT2	0.37(9.5)	0.53(13.5)	6	-TMN-MT6	14.0(0.55)	15.7(0.62)
1/4	-TMN-FT4	0.50(12.7)	0.62(15.7)	10	-TMN-MT10	22.0(0.87)	22.1(0.87)
1/2	-TMN-FT8	0.94(23.8)	0.87(22.1)	12	-TMN-MT12	24.0(0.94)	22,1(0.87)

Chromatograph Straight Fittings

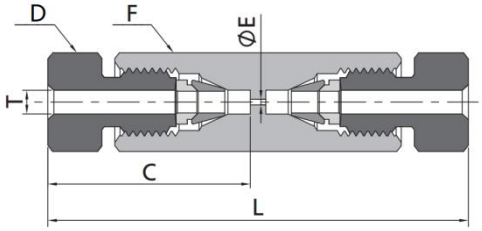

Fractional Tube							
T-Tube O.D. (in.)	Basic Ordering Number	Dimension, in. (mm)					Dead Volume
		L	C	E	D	F	
1/16	-CF-FT1	1.26(32.0)	0.61(15.5)	0.01(0.3)	0.25(6.4)	0.25(6.4)	$6.6 \times 10^{-5}cm^3$

Chromatograph Tee Fittings

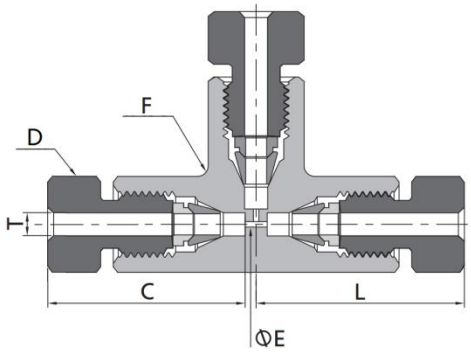

Fractional Tube							
T-Tube O.D. (in.)	Basic Ordering Number	Dimension, in. (mm)					Dead Volume
		L	C	E	D	F	
1/16	-CFT-FT1	0.66(16.8)	0.61(15.5)	0.01(0.3)	0.25(6.4)	0.37(9.5)	$6.6 \times 10^{-4}cm^3$

Pipe Fittings

Contents

Features

- All fittings have a high-quality appearance.
- Every fitting is marked with manufacturer's name for easy source tracing.
- Male threads are capped for protection.
- Straight fittings are manufactured from quality bar stock for strength
- Shaped fittings are manufactured from forgings.

Materials

Designator	Material	Bar Stock	Forged
SS	Stainless Steel 316	ASTM A276	ASTM A182
S4	Stainless Steel 304	ASTM A276	ASTM A182
CS	Cabon Steel	ASTM A108	ASTM A105
B	Brass	ASTM B16/B453	ASTM B283
AL	Aluminum	ASTM B211	ASTM B247

Plating and Coating

To resist corrosion, all carbon steel fittings are treated with an electrodeposited zinc plating.

Thread Specifications

Thread Type	Specification
NPT	ASME B1.20.1, SAE AS71051
ISO/BSP (parallel, based on DIN 3852) RP and RS fittings	ISO 228, JIS B0202
ISO/BSP (tapered, based on DIN 3852) RT fittings	ISO 7/1, BS EN 10226-1, JIS B0203
ISO/BSP (gauge) (based on EN 837-1 and 837-3) RG fittings	ISO 228, JIS B0202
Unified (SAE) ST fittings	ASME B1.1

Working Pressure

For the working temperatures of Astomi pipe fittings, refer to the Pipe Fittings catalog.

Temperature Ratings

Fitting Materials			Gasket, O-Ring Materials		
Material	Max Temperature		Material	Max Temperature	Mini Temperature
stainless steel	1000 °F / 537 °C		Buna N	230 °F / 110 °C	–13 °F / -25 °C
Carbon steel	375 °F / 190 °C		Fluorocarbon FKM	400 °F / 204 °C	–20 °F / -28 °C
Brass	400 °F / 204 °C		Copper	400 °F / 204 °C	–325 °F / -198 °C

Part NO. Discription

For Example: SS-THN-MN 8-MN 4

Material	Series	Thread Type :	Thread Size	Thread Type :	Thread Size
SS: SS 316		FN: Female Npt	2: 1/8″	FN: Female Npt	2: 1/8″
S9: SS 904L		MN: Male Npt	4: 1/4″	MN: Male Npt	4: 1/4″
S4: SS 304		FR: Female BSPT	6: 3/8″	FR: Female BSPT	6: 3/8″
M4: Monle 400		MR: Male BSPT	8: 1/2″	MR: Male BSPT	8: 1/2″
B: Brass		**SAE: UNF**	12: 3/4″	**SAE: UNF**	12: 3/4″
CS: Cabon Steel			16: 1″		16: 1″

Hex Nipples

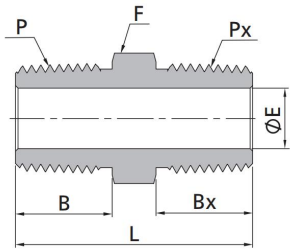

Male NPT Threads

P-NPT Size	Px-NPT Size	Basic Ordering Number	Dimension,in(mm)					Working Pressure psig(bar)	
			L	F (Hex)	B	Bx	E	316SS, Steel	Brass
1/16	1/16	-THN-MN1	1.01 (25.6)	0.31 (7.9)	0.38 (9.7)	0.38 (9.7)	0.12 (3.0)	11000 (757)	5500 (378)
1/8	1/16	-THN-MN2-MN1	1.01 (25.6)	0.44 (11.1)	0.38 (9.7)	0.38 (9.7)	0.12 (3.0)	11000 (757)	5500 (378)
1/8	1/8	-THN-MN2	1.01 (25.6)	0.44 (11.1)	0.38 (9.7)	0.38 (9.7)	0.19 (4.8)	10000 (689)	5000 (344)
1/4	1/16	-THN-MN4-MN1	1.22 (31.0)	0.56 (14.3)	0.56 (14.2)	0.38 (9.7)	0.12 (3.0)	11000 (757)	5500 (378)
1/4	1/8	-THN-MN4-MN2	1.22 (31.0)	0.56 (14.3)	0.56 (14.2)	0.38 (9.7)	0.19 (4.8)	10000 (689)	5000 (344)
1/4	1/4	-THN-MN4	1.40 (35.6)	0.56 (14.3)	0.56 (14.2)	0.56 (14.2)	0.28 (7.1)	8000 (551)	4000 (275)
3/8	1/16	-THN-MN6-MN1	1. 25(31.8)	0.69 (17.5)	0.56 (14.2)	0.38 (9.7)	0.12 (3.0)	11000 (757)	5500 (378)
3/8	1/8	-THN-MN6-MN2	1.25 (31.8)	0.69 (17.5)	0.56 (14.2)	0.38 (9.7)	0.19 (4.8)	10000 (689)	5000 (344)
3/8	1/4	-THN-MN6-MN4	1.43 (36.3)	0.69 (17.5)	0.56 (14.2)	0.56 (14.2)	0.28 (7.1)	8000 (551)	4000 (275)
3/8	3/8	-THN-MN6	1.43 (36.3)	0.69 (17.5)	0.56 (14.2)	0.56 (14.2)	0.38 (9.7)	7800 (537)	3900 (268)
1/2	1/8	-THN-MN8-MN2	1.47 (37.3)	0.87 (22.2)	0.75 (19.1)	0.38 (9.7)	0.19 (4.8)	7700 (530)	3800 (261)
1/2	1/4	-THN-MN8-MN4	1.65 (41.9)	0.87 (22.2)	0.75 (19.1)	0.56 (14.2)	0.28 (7.1)	8000 (551)	4000 (275)
1/2	3/8	-THN-MN8-MN6	1.65 (41.9)	0.87 (22.2)	0.75 (19.1)	0.56 (14.2)	0.38 (9.7)	7800 (537)	3900 (268)
1/2	1/2	-THN-MN8	1.84 (46.7)	0.87 (22.2)	0.75 (19.1)	0.75 (19.1)	0.47 (11.9)	7700 (530)	3800 (261)
3/4	1/8	-THN-MN12-MN2	1.59 (40.4)	1.06 (27.0)	0.75 (19.1)	0.38 (9.7)	0.19 (4.8)	10000 (689)	5000 (344)
3/4	1/4	-THN-MN12-MN4	1.65 (41.9)	1.06 (27.0)	0.75 (19.1)	0.56 (14.2)	0.28 (7.1)	8000 (551)	4000 (275)
3/4	3/8	-THN-MN12-MN6	1.78 (45.2)	1.06 (27.0)	0.75 (19.1)	0.56 (14.2)	0.38 (9.7)	7800 (537)	3900 (268)
3/4	1/2	-THN-MN12-MN8	1.84 (46.7)	1.06 (27.0)	0.75 (19.1)	0.75 (19.1)	0.47 (11.9)	7700 (530)	3800 (261)
3/4	3/4	-THN-MN12	1.84 (46.7)	1.06 (27.0)	0.75 (19.1)	0.75 (19.1)	0.62 (15.7)	7300 (502)	3600 (248)
1	1/8	-THN-MN16-MN2	1.78 (45.2)	1.37 (34.9)	0.94 (23.9)	0.38 (9.7)	0.19 (4.8)	10000 (689)	5000 (344)
1	1/4	-THN-MN16-MN4	1.94 (49.3)	1.37 (34.9)	0.94 (23.9)	0.56 (14.2)	0.28 (7.1)	5300 (365)	2600 (179)
1	3/8	-THN-MN16-MN6	1.97 (50.0)	1.37 (34.9)	0.94 (23.9)	0.56 (14.2)	0.38 (9.7)	7800 (537)	3900 (268)
1	1/2	-THN-MN16-MN8	2.13 (54.1)	1.37 (34.9)	0.94 (23.9)	0.75 (19.1)	0.47 (11.9)	7700 (530)	3800 (261)
1	3/4	-THN-MN16-MN12	2.13 (54.1)	1.37 (34.9)	0.94 (23.9)	0.75 (19.1)	0.62 (15.7)	7300 (502)	3600 (248)
1	1	-THN-MN16	2.32 (58.9)	1.37 (34.9)	0.94 (23.9)	0.94 (23.9)	0.88 (22.4)	5300 (365)	2600 (179)
1 1/4	1	-THN-MN20-MN16	2.45 (62.2)	1.75 (44.5)	0.94 (23.9)	0.94 (23.9)	0.88 (22.4)	5300 (365)	2600 (179)
1 1/4	1 1/4	-THN-MN20	2.48 (62.9)	1.75 (44.5)	0.94 (23.9)	0.94 (23.9)	1.13 (28.6)	6000 (410)	3000 (200)
1 1/2	1 1/2	-THN-MN24	2.61 (66.3)	2.00 (50.8)	1.03 (26.2)	1.03 (26.2)	1.34 (34.0)	5000 (344)	2500 (172)
2	2	-THN-MN32	3.06 (77.7)	2.75 (69.9)	1.03 (26.2)	1.03 (26.2)	1.77 (45.0)	3900 (268)	1900 (130)

Heavy-Wall Male NPT Threads

P-NPT Size	Px-NPT Size	Basic Ordering Number	Dimension,in(mm)					Working Pressure psig(bar)	
			L	F (Hex)	B	Bx	E	316SS, Steel	-
1/4	1/4	-THN-MN4-10K	1.40 (35.6)	0.56 (14.3)	0.56 (14.2)	0.56 (14.2)	0.23 (5.8)	10000 (689)	-
3/8	3/8	-THN-MN6-10K	1.43 (36.3)	0.69 (17.5)	0.56 (14.2)	0.56 (14.2)	0.28 (7.1)	10000 (689)	-
1/2	1/2	-THN-MN8-10K	1.84 (46.7)	0.87 (22.2)	0.75 (19.1)	0.75 (19.1)	0.39 (9.9)	10000 (689)	-
3/4	3/4	-THN-MN12-10K	1.84 (46.7)	1.06 (27.0)	0.75 (19.1)	0.75 (19.1)	0.47 (11.9)	10000 (689)	-
1	1	-THN-MN16-10K	2.32 (58.9)	1.37 (34.9)	0.94 (23.9)	0.94 (23.9)	0.62 (15.7)	10000 (689)	-

Hex Nipples

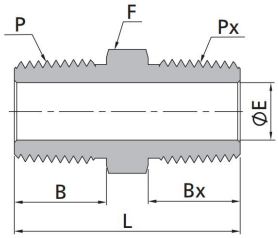

Male NPT Threads to Male ISO Tapered Threads									
P-NPT Size	Px-RT Size	Basic Ordering Number	Dimension,in(mm)					Working Pressure psig(bar)	
			L	F (Hex)	B	Bx	E	316SS, Steel	Brass
1/8	1/8	-THN-MN2-RT2	1.01 (25.6)	0.44 (11.1)	0.38 (9.7)	0.38 (9.7)	0.19 (4.8)	10000 (689)	5000 (344)
1/4	1/4	-THN-MN4-RT4	1.40 (35.6)	0.56 (14.3)	0.56 (14.2)	0.56 (14.2)	0.28 (7.1)	8000 (551)	4000 (275)
3/8	3/8	-THN-MN6-RT6	1.43 (36.3)	0.69 (17.5)	0.56 (14.2)	0.56 (14.2)	0.38 (9.7)	7800 (537)	3900 (268)
1/2	1/2	-THN-MN8-RT8	1.84 (46.7)	0.87 (22.2)	0.75 (19.1)	0.75 (19.1)	0.47 (11.9)	7700 (530)	3800 (261)
3/4	3/4	-THN-MN12-RT12	1.84 (46.7)	1.06 (27.0)	0.75 (19.1)	0.75 (19.1)	0.62 (15.7)	7300 (502)	3600 (248)
1	1	-THN-MN16-RT16	2.32 (58.9)	1.37 (34.9)	0.94 (23.9)	0.94 (23.9)	0.88 (22.4)	5300 (365)	2600 (179)

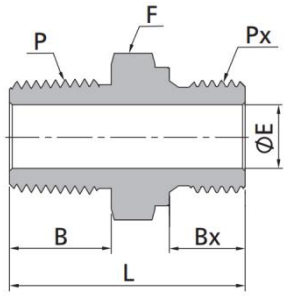

Male NPT Threads to Male ISO Parallel Threads									
P-NPT Size	Px-Rs Size	Basic Ordering Number	Dimension,in(mm)					Working Pressure psig(bar)	
			L	F (Hex)	B	Bx	E	316SS, Steel	Brass
1/8	1/8	-THN-MN2-RS2	1.09 (27.7)	0.56 (14.3)	0.38 (9.7)	0.28 (7.1)	0.16 (4.1)	11400 (785)	5700 (392)
1/4	1/4	-THN-MN4-RS4	1.45 (36.8)	0.75 (19.1)	0.56 (14.2)	0.44 (11.2)	0.23 (5.8)	10300 (709)	5100 (351)
3/8	3/8	-THN-MN6-RS6	1.48 (37.6)	0.87 (22.2)	0.56 (14.2)	0.44 (11.2)	0.31 (7.9)	10300 (709)	5100 (351)
1/2	1/2	-THN-MN8-RS8	1.75 (44.4)	1.06 (27.0)	0.75 (19.1)	0.56 (14.2)	0.47 (11.9)	7600 (523)	3800 (261)
3/4	3/4	-THN-MN12-RS12	1.93 (49.0)	1.31 (33.3)	0.75 (19.1)	0.62 (15.7)	0.62 (15.7)	7300 (502)	3600 (248)
1	1	-THN-MN16-RS16	2.23 (56.6)	1.63 (41.3)	0.94 (23.9)	0.72 (18.3)	0.78 (19.8)	7400 (509)	3700 (254)

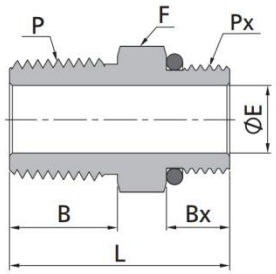

Male NPT Threads to Male ISO Parallel Threads								
P-NPT Size	Px-SAE Size	Basic Ordering Number	Dimension,in(mm)					Working Pressure psig(bar)
			L	F (Hex)	B	Bx	E	316SS, Steel
1/4	7/16-20	-THN-MN4-S7	1.20 (30.5)	0.56 (14.3)	0.56 (14.2)	0.36 (9.1)	0.20 (5.1)	4500 (310)
3/8	9/16-18	-THN-MN6-S9	1.26 (32.0)	0.69 (17.5)	0.56 (14.2)	0.36 (9.1)	0.28 (7.1)	4500 (310)
1/2	3/4-/16	-THN-MN8-S12	1.53 (38.9)	0.87 (22.2)	0.75 (19.1)	0.44 (11.2)	0.42 (10.7)	4500 (310)
3/4	1 1/16-12	-THN-MN12-S17	1.75 (44.4)	1.25 (31.8)	0.75 (19.1)	0.59 (15.0)	0.62 (15.7)	3600 (248)
1	1 5/16-12	-THN-MN16-S21	2.00 (50.8)	1.50 (38.1)	0.94 (23.9)	0.59 (15.0)	0.88(22.4)	2900 (199)

Hex Nipples

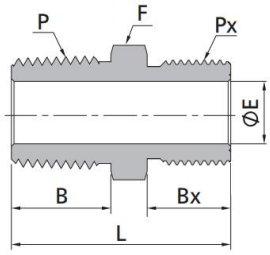

Male NPT Threads to Male Metric Threads								
P-NPT Size	Px-Metric Size	Basic Ordering Number	Dimension,in(mm)					Working Pressure psig(bar)
			L	F (Hex)	B	Bx	E	316SS, Steel
1/8	M20 x 1.5	-THN-MN2-M20	32.7 (1.29)	22.2 (0.87)	9.7 (0.38)	16.0 (0.63)	5.0 (0.20)	7700 (530)
1/4	M8 x 1	-THN-MN4-M8	29.0 (1.14)	14.3 (0.56)	14.2 (0.56)	9.0 (0.35)	3.2 (0.13)	8000 (551)
1/4	M14 x 1.5	-THN-MN4-M14	34.2 (1.35)	15.9 (0.63)	14.2 (0.56)	13.0 (0.51)	7.0 (0.28)	8000 (551)
1/4	M16 x 1.5	-THN-MN4-M16	35.2 (1.39)	17.5 (0.69)	14.2 (0.56)	14.0 (0.55)	7.1 (0.28)	7800 (537)
1/4	M20 x 1.5	-THN-MN4-M20	37.2 (1.46)	22.2 (0.87)	14.2 (0.56)	16.0 (0.63)	7.1 (0.28)	7700 (530)
3/8	M14 x 1.5	-THN-MN6-M14	34.2 (1.35)	17.5 (0.69)	14.2 (0.56)	13.0 (0.51)	7.0 (0.28)	7800 (537)
3/8	M20 x 1.5	-THN-MN6-M20	37.2 (1.46)	22.2 (0.87)	14.2 (0.56)	16.0 (0.63)	9.5 (0.37)	7700 (530)
3/8	M24 x 1.5	-THN-MN6-M24	38.2 (1.50)	25.4 (1.00)	14.2 (0.56)	17.0 (0.67)	9.5 (0.37)	7400 (509)
1/2	M14 x 1.5	-THN-MN8-M14	39.1 (1.54)	22.2 (0.87)	19.1 (0.75)	13.0 (0.51)	7.2 (0.28)	7700 (530)
1/2	M20 x 1.5	-THN-MN8-M20	42.0 (1.65)	22.2 (0.87)	19.1 (0.75)	16.0 (0.63)	10.0 (0.39)	7700 (530)
1/2	M24 x 1.5	-THN-MN8-M24	43.5 (1.71)	25.4 (1.00)	19.1 (0.75)	17.0 (0.67)	11.9 (0.47)	7400 (509)
3/4	M20 x 1.5	-THN-MN12-M20	42.1 (1.66)	27.0 (1.06)	19.1 (0.75)	16.0 (0.63)	10.8 (0.43)	7300 (502)
3/4	M27 x 2	-THN-MN12-M27	46.7 (1.84)	31.8 (1.25)	19.1 (0.75)	18.0 (0.71)	15.8 (0.62)	6100 (420)
1	M30 x 2	-THN-MN16-M30	56.3 (2.22)	34.9 (1.37)	23.9 (0.94)	20.0 (0.79)	19.4 (0.76)	6100 (420)

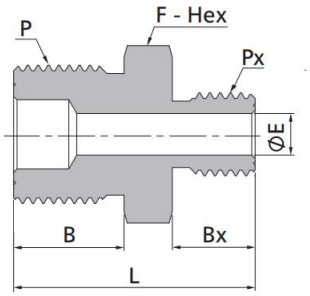

Male Metric Threads								
P-Metric Size	Px-Metric Size	Basic Ordering Number	Dimension,in(mm)					Working Pressure psig(bar)
			L	F (Hex)	B	Bx	E	316SS, Steel
M20 x 1.5	M10 x 1	-THN-M20-M10	34.0 (1.34)	22.0 (0.87)	16.0 (0.63)	11.0 (0.43)	4.0 (0.16)	10000 (689)
M20 x 1.5	M12 x 1.5	-THN-M20-M12	35.0 (1.38)	22.0 (0.87)	16.0 (0.63)	12.0 (0.47)	6.0 (0.24)	9000 (620)
M20 x 1.5	M14 x 1.5	-THN-M20-M14	36.0 (1.42)	22.0 (0.87)	16.0 (0.63)	13.0 (0.51)	7.2 (0.28)	8000 (551)
M20 x 1.5	M16 x 1.5	-THN-M20-M16	37.0 (1.46)	22.0 (0.87)	16.0 (0.63)	14.0 (0.55)	9.0 (0.35)	7800 (537)
M20 x 1.5	M20 x 1.5	-THN-M20	39.0 (1.54)	22.0 (0.87)	16.0 (0.63)	16.0 (0.63)	10.8 (0.43)	7700 (530)
M27 x 2	M27 x 2	-THN-M27	44.5 (1.75)	30.0 (1.18)	18.0 (0.71)	18.0 (0.71)	16.1 (0.63)	7300 (502)

Hex Long Nipples

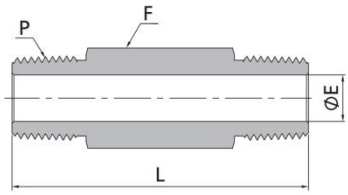

Male NPT Threads						
P-NPT Size	Basic Ordering Number	Dimension,in(mm)			Working Pressure psig(bar)	
		L	F (Hex)	E	316SS, Steel	/
1/8	-THL-MN2-1.5	1.50 (38.1)	0.44 (11.1)	0.19 (4.8)	10000 (689)	5000 (344)
1/8	-THL-MN2-2	2.00 (50.8)	0.44 (11.1)	0.19 (4.8)	10000 (689)	5000 (344)
1/8	-THL-MN2-2.5	2.50 (63.5)	0.44 (11.1)	0.19 (4.8)	10000 (689)	5000 (344)
1/8	-THL-MN2-3	3.00 (76.2)	0.44 (11.1)	0.19 (4.8)	10000 (689)	5000 (344)
1/4	-THL-MN4-1.5	1.50 (38.1)	0.56 (14.3)	0.28 (7.1)	8000 (551)	4000 (275)
1/4	-THL-MN4-2	2.00 (50.8)	0.56 (14.3)	0.28 (7.1)	8000 (551)	4000 (275)
1/4	-THL-MN4-2.5	2.50 (63.5)	0.56 (14.3)	0.28 (7.1)	8000 (551)	4000 (275)
1/4	-THL-MN4-3	3.00 (76.2)	0.56 (14.3)	0.28 (7.1)	8000 (551)	4000 (275)
1/4	-THL-MN4-4	4.00 (101.6)	0.56 (14.3)	0.28 (7.1)	8000 (551)	4000 (275)
3/8	-THL-MN6-1.5	1.50 (38.1)	0.69 (17.5)	0.38 (9.7)	7800 (537)	3900 (268)
3/8	-THL-MN6-2	2.00 (50.8)	0.69 (17.5)	0.38 (9.7)	7800 (537)	3900 (268)
3/8	-THL-MN6-2.5	2.50 (63.5)	0.69 (17.5)	0.38 (9.7)	7800 (537)	3900 (268)
3/8	-THL-MN6-3	3.00 (76.2)	0.69 (17.5)	0.38 (9.7)	7800 (537)	3900 (268)
3/8	-THL-MN6-4	4.00 (101.6)	0.69 (17.5)	0.38 (9.7)	7800 (537)	3900 (268)
1/2	-THL-MN8-2	2.00 (50.8)	0.87 (22.2)	0.47 (11.9)	7700 (530)	3800 (261)
1/2	-THL-MN8-3	3.00 (76.2)	0.87 (22.2)	0.47 (11.9)	7700 (530)	3800 (261)
1/2	-THL-MN8-4	4.00 (101.6)	0.87 (22.2)	0.47 (11.9)	7700 (530)	3800 (261)
1/2	-THL-MN8-6	6.00 (152.4)	0.87 (22.2)	0.47 (11.9)	7700 (530)	3800 (261)
3/4	-THL-MN12-2	2.00 (50.8)	1.06 (27.0)	0.62 (15.7)	7300 (502)	3600 (248)
3/4	-THL-MN12-3	3.00 (76.2)	1.06 (27.0)	0.62 (15.7)	7300 (502)	3600 (248)
3/4	-THL-MN12-4	4.00 (101.6)	1.06 (27.0)	0.62 (15.7)	7300 (502)	3600 (248)
1	-THL-MN16-3	3.00 (76.2)	1.37 (34.9)	0.88 (22.4)	5300 (365)	2600 (179)
1	-THL-MN16-4	4.00 (101.6)	1.37 (34.9)	0.88 (22.4)	5300 (365)	2600 (179)

Male Tapered Threads						
P-RT Size	Basic Ordering Number	Dimension,in(mm)			Working Pressure psig(bar)	
		L	F (Hex)	E	316SS, Steel	Brass
1/8	-THL-RT2- 2	2.00 (50.8)	0.44 (11.1)	0.19 (4.8)	10000 (689)	5000 (344)
1/8	-THL-RT2-2.5	2.50 (63.5)	0.44 (11.1)	0.19 (4.8)	10000 (689)	5000 (344)
1/8	-THL-RT2-3	3.00 (76.2)	0.44 (11.1)	0.19 (4.8)	10000 (689)	5000 (344)
1/4	-THL-RT4-2	2.00 (50.8)	0.56 (14.3)	0.28 (7.1)	8000 (551)	4000 (275)
1/4	-THL-RT4-2.5	2.50 (63.5)	0.56 (14.3)	0.28 (7.1)	8000 (551)	4000 (275)
1/4	-THL-RT4-3	3.00 (76.2)	0.56 (14.3)	0.28 (7.1)	8000 (551)	4000 (275)
1/4	-THL-RT4-4	4.00 (101.6)	0.56 (14.3)	0.28 (7.1)	8000 (551)	4000 (275)
3/8	-THL-RT6-2	2.00 (50.8)	0.69 (17.5)	0.38 (9.7)	7800 (537)	3900 (268)
3/8	-THL-RT6-2.5	2.50 (63.5)	0.69 (17.5)	0.38 (9.7)	7800 (537)	3900 (268)
3/8	-THL-RT6-3	3.00 (76.2)	0.69 (17.5)	0.38 (9.7)	7800 (537)	3900 (268)
3/8	-THL-RT6-4	4.00 (101.6)	0.69 (17.5)	0.38 (9.7)	7800 (537)	3900 (268)
1/2	-THL-RT8-2	2.00 (50.8)	0.87 (22.2)	0.47 (11.9)	7700 (530)	3800 (261)
1/2	-THL-RT8-3	3.00 (76.2)	0.87 (22.2)	0.47 (11.9)	7700 (530)	3800 (261)
1/2	-THL-RT8-4	4.00 (101.6)	0.87 (22.2)	0.47 (11.9)	7700 (530)	3800 (261)
1/2	-THL-RT8-6	6.00 (152.4)	0.87 (22.2)	0.47 (11.9)	7700 (530)	3800 (261)
3/4	-THL-RT12-2	2.00 (50.8)	1.06 (27.0)	0.62 (15.7)	7300 (502)	3600 (248)
3/4	-THL-RT12-3	3.00 (76.2)	1.06 (27.0)	0.62 (15.7)	7300 (502)	3600 (248)
3/4	-THL-RT12-4	4.00 (101.6)	1.06 (27.0)	0.62 (15.7)	7300 (502)	3600 (248)
1	-THL-RT16-3	3.00 (76.2)	1.37 (34.9)	0.88 (22.4)	5300 (365)	2600 (179)
1	-THL-RT16-4	4.00 (101.6)	1.37 (34.9)	0.88 (22.4)	5300 (365)	2600 (179)

Close Nipples

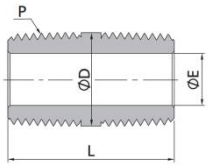

Male NPT Threads						
P-NPT Size	Basic Ordering Number	Dimension,in(mm)			Working Pressure psig(bar)	
		L	D	E	316SS, Steel	Brass
1/16	-TCN-MN1	0.75 (19.1)	0.31 (7.9)	0.12 (3.0)	11000(757)	5500(378)
1/8	-TCN-MN2	0.75 (19.1)	0.41 (10.3)	0.19 (4.8)	10000(689)	5000(344)
1/4	-TCN-MN4	1.12 (28.4)	0.54 (13.7)	0.28 (7.1)	8000(551)	4000(275)
3/8	-TCN-MN6	1.12 (28.4)	0.67 (17.1)	0.38 (9.6)	7800(537)	3900(268)
1/2	-TCN-MN8	1.50 (38.1)	0.84 (21.3)	0.47 (11.9)	7700(530)	3800(261)
3/4	-TCN-MN12	1.50 (38.1)	1.05 (26.7)	0.62 (15.7)	7300(502)	3600(248)
1	-TCN-MN16	1.88 (47.8)	1.31 (33.4)	0.88 (22.4)	5300(365)	2600(179)
Male ISO Threads						
P-RT Size	Basic Ordering Number	Dimension,in(mm)			Working Pressure psig(bar)	
		L	D	E	316SS, Steel	Brass
1/16	-TCN-RT1	0.75 (19.1)	0.31 (7.9)	0.12 (3.0)	11000(757)	5500(378)
1/8	-TCN-RT2	0.75 (19.1)	0.41 (10.3)	0.19 (4.8)	10000(689)	5000(344)
1/4	-TCN-RT4	1.12 (28.4)	0.54 (13.7)	0.28 (7.1)	8000(551)	4000(275)
3/8	-TCN-RT6	1.12 (28.4)	0.67 (17.1)	0.38 (9.7)	7800(537)	3900(268)
1/2	-TCN-RT8	1.50 (38.1)	0.84 (21.3)	0.47 (11.9)	7700(530)	3800(261)
3/4	-TCN-RT12	1.50 (38.1)	1.05 (26.7)	0.62 (15.7)	7300(502)	3600(248)
1	-TCN-RT16	1.88 (47.8)	1.31 (33.4)	0.88 (22.4)	5300(365)	2600(179)

Special Pipe Nipples

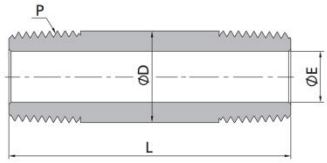

Male NPT Threads						
P-NPT Size	Basic Ordering Number	Dimension,in(mm)			Working Pressure psig(bar)	
		L	D	E	316SS, Steel	Brass
1/8	-TSN-MN2-1.5	1.50 (38.1)	0.41 (10.3)	0.19 (4.8)	10000(689)	5000(344)
1/8	-TSN-MN2-2	2.00(50.8)	0.41 (10.3)	0.19 (4.8)	10000(689)	5000(344)
1/8	-TSN-MN2-2.5	2.50(63.5)	0.41 (10.3)	0.19 (4.8)	10000(689)	5000(344)
1/8	-TSN-MN2-3	3.00(76.2)	0.41 (10.3)	0.19 (4.8)	10000(689)	5000(344)
1/4	-TSN-MN4-1.5	1.50 (38.1)	0.54 (13.7)	0.28 (7.1)	8000(551)	4000(275)
1/4	-TSN-MN4-2	2.00(50.8)	0.54 (13.7)	0.28 (7.1)	8000(551)	4000(275)
1/4	-TSN-MN4-2.5	2.50(63.5)	0.54 (13.7)	0.28 (7.1)	8000(551)	4000(275)
1/4	-TSN-MN4-3	3.00(76.2)	0.54 (13.7)	0.28 (7.1)	8000(551)	4000(275)
1/4	-TSN-MN4-4	4.00(101.6)	0.54 (13.7)	0.28 (7.1)	8000(551)	4000(275)
3/8	-TSN-MN6-1.5	1.50 (38.1)	0.67 (17.1)	0.38(9.7)	7800(537)	3900(268)
3/8	-TSN-MN6-2	2.00(50.8)	0.67 (17.1)	0.38(9.7)	7800(537)	3900(268)
3/8	-TSN-MN6-2.5	2.50(63.5)	0.67 (17.1)	0.38(9.7)	7800(537)	3900(268)
3/8	-TSN-MN6-3	3.00(76.2)	0.67 (17.1)	0.38(9.7)	7800(537)	3900(268)
3/8	-TSN-MN6-4	4.00(101.6)	0.67 (17.1)	0.38(9.7)	7800(537)	3900(268)
1/2	-TSN-MN8-2	2.00(50.8)	0.84 (21.3)	0.47 (11.9)	7700(530)	3800(261)
1/2	-TSN-MN8-3	3.00(76.2)	0.84 (21.3)	0.47 (11.9)	7700(530)	3800(261)
1/2	-TSN-MN8-4	4.00(101.6)	0.84 (21.3)	0.47 (11.9)	7700(530)	3800(261)
1/2	-TSN-MN8-6	6.00(152.4)	0.84 (21.3)	0.47 (11.9)	7700(530)	3800(261)
3/4	-TSN-MN12-2	2.00(50.8)	1.05 (26.7)	0.62 (15.7)	7300(502)	3600(248)
3/4	-TSN-MN12-3	3.00(76.2)	1.05 (26.7)	0.62 (15.7)	7300(502)	3600(248)
3/4	-TSN-MN12-4	4.00(101.6)	1.05 (26.7)	0.62 (15.7)	7300(502)	3600(248)
1	-TSN-MN16-3	3.00(76.2)	1.31 (33.4)	0.88 (22.4)	5300(365)	2600(179)
1	-TSN-MN16-4	4.00(101.6)	1.31 (33.4)	0.88 (22.4)	5300(365)	2600(179)

Adapters

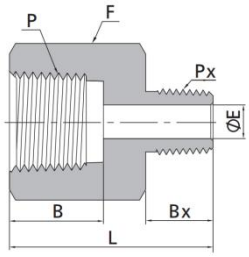

Female to Male NPT Threads									
P-NPT Size	Px-NPT Size	Basic Ordering Number	Dimension,in(mm)					Working Pressure psig(bar)	
			L	F (Hex)	B	Bx	E	316SS, Steel	Brass
1/8	1/16	-TAD-FN2-MN1	1.09 (27.7)	0.56 (14.3)	0.41(10.4)	0.38(9.7)	0.12(3.0)	6500 (447)	3200(220)
1/8	1/8	-TAD-FN2-MN2	1.10 (27.9)	0.56 (14.3)	0.41(10.4)	0.38(9.7)	0.19(4.8)	6500 (447)	3200(220)
1/4	1/16	-TAD-FN4-MN1	1.20 (30.5)	0.75 (19.1)	0.59 (15.0)	0.38(9.7)	0.12(3.0)	6600 (454)	3300 (227)
1/4	1/8	-TAD-FN4-MN2	1.26 (32.0)	0.75 (19.1)	0.59 (15.0)	0.38(9.7)	0.19(4.8)	6600 (454)	3300 (227)
1/4	1/4	-TAD-FN4-MN4	1.40 (35.6)	0.75 (19.1)	0.59 (15.0)	0.56 (14.2)	0.28 (7.1)	6600 (454)	3300 (227)
3/8	1/16	-TAD-FN6-MN1	1.25 (31.8)	0.87 (22.2)	0.59 (15.0)	0.38 (9.7)	0.12 (3.0)	5300 (365)	2600 (179)
3/8	1/8	-TAD-FN6-MN2	1.33 (33.8)	0.87 (22.2)	0.59 (15.0)	0.38 (9.7)	0.19 (4.8)	5300 (365)	2600 (179)
3/8	1/4	-TAD-FN6-MN4	1.50 (38.1)	0.87 (22.2)	0.59 (15.0)	0.56 (14.2)	0.28 (7.1)	5300 (365)	2600 (179)
3/8	3/8	-TAD-FN6-MN6	1.51 (38.4)	0.87 (22.2)	0.59 (15.0)	0.56 (14.2)	0.38 (9.6)	5300 (365)	2600 (179)
1/2	1/8	-TAD-FN8-MN2	1.58 (40.1)	1.06 (27.0)	0.78 (19.8)	0.38 (9.7)	0.19 (4.8)	4900 (337)	2400 (165)
1/2	1/4	-TAD-FN8-MN4	1.76 (44.7)	1.06 (27.0)	0.78 (19.8)	0.56 (14.2)	0.28 (7.1)	4900 (337)	2400 (165)
1/2	3/8	-TAD-FN8-MN6	1.75 (44.4)	1.06 (27.0)	0.78 (19.8)	0.56 (14.2)	0.38 (9.6)	4900 (337)	2400 (165)
1/2	1/2	-TAD-FN8-MN8	1.94 (49.3)	1.06 (27.0)	0.78 (19.8)	0.75 (19.1)	0.47 (11.9)	4900 (337)	2400 (165)
3/4	1/8	-TAD-FN12-MN2	1.56 (39.6)	1.31 (33.3)	0.81 (20.6)	0.38 (9.7)	0.19 (4.8)	4600 (316)	2300 (158)
3/4	1/4	-TAD-FN12-MN4	1.85 (47.0)	1.31 (33.3)	0.81 (20.6)	0.56 (14.2)	0.28 (7.1)	4600 (316)	2300 (158)
3/4	3/8	-TAD-FN12-MN6	1.82 (46.2)	1.31 (33.3)	0.81 (20.6)	0.56 (14.2)	0.38 (9.6)	4600 (316)	2300 (158)
3/4	1/2	-TAD-FN12-MN8	2.02 (51.3)	1.31 (33.3)	0.81 (20.6)	0.75 (19.1)	0.47 (11.9)	4600 (316)	2300 (158)
3/4	3/4	-TAD-FN12-MN12	2.02 (51.3)	1.31 (33.3)	0.81 (20.6)	0.75 (19.1)	0.62 (15.7)	4600 (316)	2300 (158)
1	1/8	-TAD-FN16-MN2	1.81 (46.0)	1.63 (41.3)	1.00 (25.4)	0.38 (9.7)	0.19 (4.8)	4400 (303)	2200 (151)
1	1/4	-TAD-FN16-MN4	1.96 (49.8)	1.63 (41.3)	1.00 (25.4)	0.56 (14.2)	0.28 (7.1)	4400 (303)	2200 (151)
1	3/8	-TAD-FN16-MN6	2.00 (50.8)	1.63 (41.3)	1.00 (25.4)	0.56 (14.2)	0.38 (9.6)	4400 (303)	2200 (151)
1	1/2	-TAD-FN16-MN8	2.16 (54.9)	1.63 (41.3)	1.00 (25.4)	0.75 (19.1)	0.47 (11.9)	4400 (303)	2200 (151)
1	3/4	-TAD-FN16-MN12	2.17 (55.1)	1.63 (41.3)	1.00 (25.4)	0.75 (19.1)	0.62 (15.7)	4400 (303)	2200 (151)
1	1	-TAD-FN16-MN16	2.28 (57.9)	1.63 (41.3)	1.00 (25.4)	0.94 (23.9)	0.88 (22.4)	4400 (303)	2200 (151)
1 1/4	1	-TAD-FN20-MN16	2.47 (62.7)	2.13 (54.0)	1.00 (25.4)	0.94 (23.9)	0.88 (22.4)	5000 (344)	2500 (172)
Heavy-Wall Female to Male NPT Threads									
1/4	1/4	-TAD-FN4-MN4-10K	1.43 (36.3)	1.00 (25.4)	0.59 (15.0)	0.56 (14.2)	0.23 (5.8)	10000 (689)	/
1/2	1/2	-TAD-FN8-MN8-10K	2.02 (51.3)	1.50 (38.1)	0.78 (19.8)	0.75 (19.1)	0.39 (9.9)	10000 (689)	/
1/2	1/4	-TAD-FN8-MN4-10K	1.81 (46.0)	1.50 (38.1)	0.78 (19.8)	0.56 (14.2)	0.23 (5.8)	10000 (689)	/

Female NPT Threads to Male ISO Parallel Threads									
P-NPT Size	Px-RT Size	Basic Ordering Number	Dimension,in(mm)					Working Pressure psig(bar)	
			L	F (Hex)	B	Bx	E	316SS, Steel	Brass
1/8	1/8	-TAD-FN2-RT2	1.09 (27.7)	0.56 (14.3)	0.41 (10.4)	0.38 (9.7)	0.19 (4.8)	6500 (447)	3200 (220)
1/4	1/4	-TAD-FN4-RT4	1.42 (36.1)	0.75 (19.1)	0.59 (15.0)	0.56 (14.2)	0.28 (7.1)	6600 (454)	3300 (227)
3/8	3/8	-TAD-FN6-RT6	1.50 (38.1)	0.87 (22.2)	0.59 (15.0)	0.56 (14.2)	0.38 (9.6)	5300 (365)	2600 (179)
1/2	1/2	-TAD-FN8-RT8	1.94 (49.3)	1.06 (27.0)	0.78 (19.8)	0.75 (19.1)	0.47 (11.9)	4900 (337)	2400 (165)
3/4	3/4	-TAD-FN12-RT12	2.02 (51.3)	1.31 (33.3)	0.81 (20.6)	0.75 (19.1)	0.62 (15.7)	4600 (316)	2300 (158)
1	1	-TAD-FN16-RT16	2.30(58.4)	1.63 (41.3)	1.00 (25.4)	0.94 (23.9)	0.88 (22.4)	4400 (303)	2200 (151)

Adapters

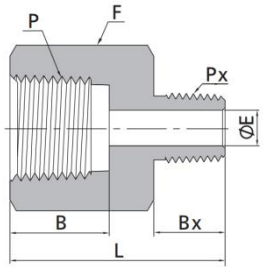

Female NPT Threads to Male ISO Tapered Threads									
P-NPT Size	Px-RX Size	Basic Ordering Number	Dimension,in(mm)					Working Pressure psig(bar)	
			L	F (Hex)	B	Bx	E	316SS, Steel	Brass
1/8	1/8	-TAD-FR2-MR2	1.09 (27.7)	0.56 (14.3)	0.41 (10.4)	0.38 (9.7)	0.19 (4.8)	6500 (447)	3200 (220)
1/4	1/8	-TAD-FR4-MR2	1.26(32.0)	0.75 (19.1)	0.59 (15.0)	0.38 (9.7)	0.19 (4.8)	6600 (454)	3300 (227)
1/4	1/4	-TAD-FR4-MR4	1.42 (36.1)	0.75 (19.1)	0.59 (15.0)	0.56 (14.2)	0.28 (7.1)	6600 (454)	3300 (227)
3/8	1/4	-TAD-FR6-MR4	1.50 (38.1)	0.87 (22.2)	0.59 (15.0)	0.56 (14.2)	0.28 (7.1)	5300 (365)	2600 (179)
3/8	3/8	-TAD-FR6-MR6	1.50 (38.1)	0.87 (22.2)	0.59 (15.0)	0.56 (14.2)	0.38 (9.7)	5300 (365)	2600 (179)
1/2	1/4	-TAD-FR8-MR4	1.76 (44.7)	1.06 (27.0)	0.78 (19.8)	0.56 (14.2)	0.28 (7.1)	4900 (337)	2400 (165)
1/2	3/8	-TAD-FR8-MR6	1.75 (44.4)	1.06 (27.0)	0.78 (19.8)	0.56 (14.2)	0.38 (9.7)	4900 (337)	2400 (165)
1/2	1/2	-TAD-FR8-MR8	1.95(49.5)	1.06 (27.0)	0.78 (19.8)	0.75 (19.1)	0.47 (11.9)	4900 (337)	2400 (165)
3/4	3/4	-TAD-FR12-MR12	2.02 (51.3)	1.31 (33.3)	0.81 (20.6)	0.75 (19.1)	0.62 (15.7)	4600 (316)	2300 (158)
1	1	-TAD-FR16-MR16	2.30(58.4)	1.63 (41.3)	1.00 (25.4)	0.94 (23.9)	0.88 (22.4)	4400 (303)	2200 (151)
Female ISO Tapered Threads to Male NPT Threads									
P-RT Size	Px-NPT Size	Basic Ordering Number	Dimension,in(mm)					Working Pressure psig(bar)	
			L	F (Hex)	B	Bx	E	316SS, Steel	Brass
1/8	1/8	-TAD-FR2-MN2	1.09 (27.7)	0.56 (14.3)	0.41 (10.4)	0.38 (9.7)	0.19 (4.8)	6500 (447)	3200 (220)
1/4	1/4	-TAD-FR4-MN4	1.43 (36.3)	0.75 (19.1)	0.59 (15.0)	0.56 (14.2)	0.28 (7.1)	6600 (454)	3300 (227)
3/8	3/8	-TAD-FR6-MN6	1.51 (38.4)	0.87 (22.2)	0.59 (15.0)	0.56 (14.2)	0.38 (9.6)	5300 (365)	2600 (179)
1/2	1/2	-TAD-FR8-MN8	1.96 (49.8)	1.06 (27.0)	0.78 (19.8)	0.75 (19.1)	0.47 (11.9)	4900 (337)	2400 (165)
3/4	3/4	-TAD-FR12-MN12	2.02 (51.3)	1.31 (33.3)	0.81 (20.6)	0.75 (19.1)	0.62 (15.7)	4600 (316)	2300 (158)
1	1	-TAD-FR16-MN16	2.30 (58.4)	1.63 (41.3)	1.00 (25.4)	0.94 (23.9)	0.88 (22.4)	4400 (303)	2200 (151)

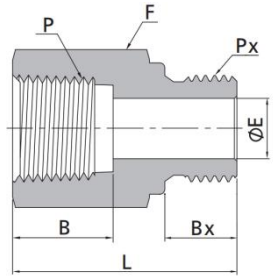

Size	Size	Number	Dimension,in(mm)					Working Pressure psig(bar)	
			L	F (Hex)	B	Bx	E	316SS, Steel	Brass
1/8	1/8	-TAD-FN2-RS2	0.99 (25.1)	0.56 (14.3)	0.39 (9.9)	0.28 (7.1)	0.16 (4.1)	6500 (447)	3200 (220)
1/4	1/4	-TAD-FN4-RS4	1.32 (33.5)	0.75 (19.1)	0.41 (10.4)	0.44 (11.2)	0.23 (5.8)	6600 (454)	3300 (227)
3/8	3/8	-TAD-FN6-RS6	1.41 (35.8)	0.87 (22.2)	0.59 (15.0)	0.44 (11.2)	0.31 (7.9)	5300 (365)	2600 (179)
1/2	1/2	-TAD-FN8-RS8	1.74 (44.2)	1.06 (27.0)	0.81 (20.6)	0.56 (14.2)	0.47 (11.9)	4900 (337)	2400 (165)
3/4	3/4	-TAD-FN12-RS12	1.89 (48.0)	1.31 (33.3)	0.81 (20.6)	0.62 (15.7)	0.62 (15.7)	4600 (316)	2300 (158)

Adapters

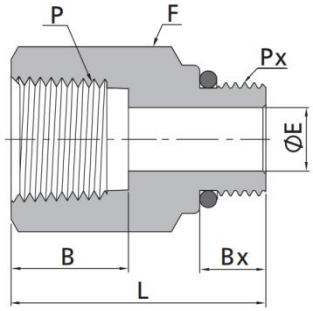

Female NPT Threads to Male SAE/MS Threads								
P-NPT Size	Px-RX Size	Basic Ordering Number	Dimension,in(mm)					Working Pressure psig(bar)
			L	F (Hex)	B	Bx	E	316SS, Steel
1/4	7/16-20	-TAD-FN4-S7	1.32 (33.5)	0.75 (19.1)	0.59 (15.0)	0.36 (9.1)	0.20 (5.1)	4500(310)
3/8	9/16-18	-TAD-FN6-S9	1.39 (35.3)	0.94 (23.8)	0.59 (15.0)	0.39 (9.9)	0.28 (7.1)	4500(310)
1/2	3/4-16	-TAD-FN8-S12	1.76 (44.7)	1.06 (27.0)	0.78 (19.8)	0.44 (11.2)	0.42 (10.7)	4500(310)
3/4	1 1/16-12	-TAD-FN12-S17	1.99 (50.5)	1.37 (34.9)	0.81 (20.6)	0.59 (15.0)	0.66 (16.8)	3600(248)
1	1 5/16-12	-TAD-FN16-S21	2.12 (53.8)	1.63 (41.3)	1.00 (25.4)	0.59 (15.0)	0.85 (21.5)	2900(199)

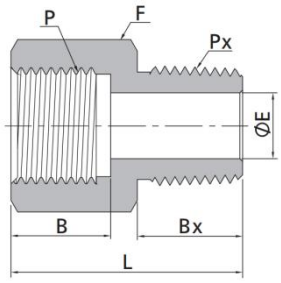

Female ISO Parallel Threads to Male NPT Threads								
P-RG Size	Px-NPT Size	Basic Ordering Number	Dimension,in(mm)					Working Pressure psig(bar)
			L	F (Hex)	B	Bx	E	316SS, Steel
1/8	1/8	-TAD-RG2-MN2	0.86 (21.8)	0.56 (14.3)	0.26 (6.5)	0.38 (9.7)	0.18 (4.5)	6100(420)
1/4	1/4	-TAD-RG4-MN4	1.19 (30.2)	0.75 (19.1)	0.51 (12.9)	0.56 (14.2)	0.22 (5.5)	5700(392)
3/8	3/8	-TAD-RG6-MN6	1.27 (32.2)	0.94 (23.8)	0.56 (14.2)	0.56 (14.2)	0.26 (6.5)	5700(392)
1/2	1/2	-TAD-RG8-MN8	1.68 (42.7)	1.06 (27.0)	0.74 (18.8)	0.75 (19.1)	0.28 (7.0)	3900(268)
3/4	3/4	-TAD-RG12-MN12	2.02 (51.3)	1.31 (33.3)	0.81 (20.6)	0.75 (19.1)	0.62 (15.7)	4600 (316)
1	1	-TAD-RG16M-N16	2.30(58.4)	1.63 (41.3)	1.00 (25.4)	0.94 (23.9)	0.88 (22.4)	4400 (303)

Reducing Bushings

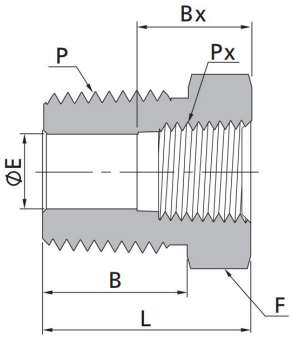

Male NPT to Female NPT Threads									
P-NPT Size	Px-NPT Size	Basic Ordering Number	Dimension,in(mm)					Working Pressure psig(bar)	
			L	F (Hex)	B	Bx	E	316SS, Steel	Brass
1/8	1/16	-TRB-MN2-FN1	1.03 (26.2)	0.44 (11.1)	0.38 (9.7)	0.39 (9.9)	0.19 (4.8)	6500 (447)	3200 (220)
1/4	1/16	-TRB-MN4-FN1	0.86 (21.8)	0.56 (14.3)	0.56 (14.2)	0.39 (9.9)	0.19 (4.8)	8000 (551)	4000 (275)
1/4	1/8	-TRB-MN4-FN2	1.06 (26.9)	0.56 (14.3)	0.56 (14.2)	0.41 (10.4)	0.28 (7.1)	6500 (447)	3300 (227)
3/8	1/16	-TRB-MN6-FN1	0.86 (21.8)	0.69 (17.5)	0.56 (14.2)	0.39 (9.9)	0.19 (4.8)	13300 (971)	6600 (454)
3/8	1/8	-TRB-MN6-FN2	0.86 (21.8)	0.69 (17.5)	0.56 (14.2)	0.41 (10.4)	0.34 (8.6)	9200 (633)	4700 (323)
3/8	1/4	-TRB-MN6-FN4	1.19 (30.2)	0.75 (19.1)	0.56 (14.2)	0.59 (15.0)	0.38 (9.6)	6600 (454)	3300 (227)
1/2	1/8	-TRB-MN8-FN2	1.08 (27.4)	0.87 (22.2)	0.75 (19.1)	0.41 (10.4)	0.34 (8.6)	12200 (840)	6200 (427)
1/2	1/4	-TRB-MN8-FN4	1.08 (27.4)	0.87 (22.2)	0.75 (19.1)	0.59 (15.0)	0.45 (11.4)	8300 (571)	4400 (303)
1/2	3/8	-TRB-MN8-FN6	1.41 (35.8)	0.87 (22.2)	0.75 (19.1)	0.59 (15.0)	0.47 (11.9)	5300 (365)	2600 (179)
3/4	1/8	-TRB-MN12-FN2	1.08 (27.4)	1.06 (27.0)	0.75 (19.1)	0.41 (10.4)	0.28 (7.1)	20000(1378)	10000(689)
3/4	1/4	-TRB-MN12-FN4	1.08 (27.4)	1.06 (27.0)	0.75 (19.1)	0.59 (15.0)	0.45 (11.4)	12000 (826)	6000 (410)
3/4	3/8	-TRB-MN12-FN6	1.08 (27.4)	1.06 (27.0)	0.75 (19.1)	0.59 (15.0)	0.59 (15.0)	8200 (564)	4300 (296)
3/4	1/2	-TRB-MN12-FN8	1.63 (41.4)	1.06 (27.0)	0.75 (19.1)	0.78 (19.8)	0.62 (15.7)	4900 (337)	2400 (165)
1	1/8	-TRB-MN16-FN2	1.36 (34.5)	1.37 (34.9)	0.94 (23.9)	0.41 (10.4)	0.28 (7.1)	20000(1378)	10000(689)
1	1/4	-TRB-MN16-FN4	1.37 (34.8)	1.37 (34.9)	0.94 (23.9)	0.59 (15.0)	0.45 (11.4)	14500 (999)	7400 (509)
1	3/8	-TRB-MN16-FN6	1.37 (34.8)	1.37 (34.9)	0.94 (23.9)	0.59 (15.0)	0.59 (15.0)	11600 (799)	5900 (406)
1	1/2	-TRB-MN16-FN8	1.37 (34.8)	1.37 (34.9)	0.94 (23.9)	0.78 (19.8)	0.73 (18.5)	8600 (592)	4300 (296)
1	3/4	-TRB-MN16-FN12	1.85 (47.0)	1.37 (34.9)	0.94 (23.9)	0.81 (20.6)	0.88 (22.4)	5300 (365)	2600 (179)
1 1/4	3/4	-TRB-MN20-FN12	1.47 (37.3)	1.75 (44.5)	0.94 (23.9)	0.81 (20.6)	0.88 (22.4)	7800 (537)	3900 (268)
1 1/4	1	-TRB-MN20-FN16	1.47 (37.3)	1.75 (44.5)	0.94 (23.9)	1.00 (25.4)	0.88 (22.4)	3500 (241)	1750 (120)
1 1/2	1	-TRB-MN24-FN16	1.58 (40.1)	2.00 (50.8)	1.03 (26.2)	1.00 (25.4)	0.88 (22.4)	6600 (454)	3300 (227)
1 1/2	1 1/4	-TRB-MN24-FN20	2.20 (56.0)	2.13 (54.0)	1.03 (26.2)	1.00 (25.4)	1.34 (34.0)	5000 (344)	2500 (172)

Male ISO Tapered Threads to Female ISO Tapered Threads									
P-RT Size	Px-RT Size	Basic Ordering Number	Dimension,in(mm)					Working Pressure psig(bar)	
			L	F (Hex)	B	Bx	E	316SS, Steel	Brass
1/4	1/8	-TRB-MR4-FR2	1.06 (26.9)	0.56 (14.3)	0.56 (14.2)	0.41 (10.4)	0.28 (7.1)	6500 (447)	3200(220)
3/8	1/4	-TRB-MR6-FR4	1.19 (30.2)	0.75 (19.1)	0.56 (14.2)	0.59 (15.0)	0.38 (9.6)	6600 (454)	3300(227)
1/2	1/4	-TRB-MR8-FR4	1.08 (27.4)	0.87 (22.2)	0.75 (19.1)	0.59 (15.0)	0.44 (11.2)	8300 (571)	4400(303)
1/2	3/8	-TRB-MR8-FR6	1.41 (35.8)	0.87 (22.2)	0.75 (19.1)	0.59 (15.0)	0.47 (11.9)	5300 (365)	2600(179)
3/4	1/2	-TRB-MR12-FR8	1.63 (41.4)	1.06 (27.0)	0.75 (19.1)	0.78 (19.8)	0.62 (15.7)	4900 (337)	2400 (165)
1	3/4	-TRB-MR16-FR12	1.85 (47.0)	1.37 (34.9)	0.94 (23.9)	0.81 (20.6)	0.88 (22.4)	5300 (365)	2600 (179)
1 1/4	1	-TRB-MR20-FR16	1.47 (37.3)	1.75 (44.5)	0.94 (23.9)	1.00 (25.4)	0.88 (22.4)	3500 (241)	1750 (120)
1 1/2	1	-TRB-MR24-FR16	1.58 (40.1)	2.00 (50.8)	1.03 (26.2)	1.00 (25.4)	0.88 (22.4)	6600 (454)	3300 (227)
1 1/2	1 1/4	-TRB-MR24-FR20	2.20 (56.0)	2.13 (54.0)	1.03 (26.2)	1.00 (25.4)	1.34 (34.0)	5000 (344)	2500 (172)

Hex Couplings

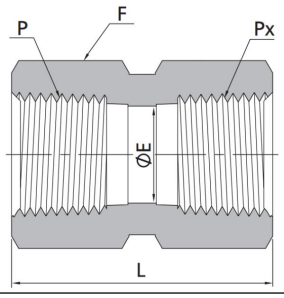

Female NPT Threads							
P-NPT Size	Px-NPT Size	Basic Ordering Number	Dimension,in(mm)			Working Pressure psig(bar)	
			L	F (Hex)	E	316SS, Steel	Brass
1/16	1/16	-THC-FN1	0.78(19.8)	0.44(11.1)	0.19(4.8)	6700 (460)	3300 (227)
1/8	1/8	-THC-FN2	0.81(20.6)	0.56 14.3)	0.34(8.6)	6500 (447)	3200 (220)
1/4	1/8	-THC-FN4-FN2	1.22(31.0)	0.75(19.1)	0.34(8.6)	6600 (454)	3300 (227)
1/4	1/4	-THC-FN4	1.19(30.2)	0.75(19.1)	0.45(11.4)	6600 (454)	3300 (227)
3/8	1/4	-THC-FN6-FN4	1.38(35.1)	0.87(22.2)	0.45 11.4)	5300 (365)	2600 (179)
3/8	3/8	-THC-FN6	1.31(33.3)	0.87(22.2)	0.59(15.0)	5300 (365)	2600 (179)
1/2	1/8	-THC-FN8-FN2	1.56(39.6)	1.06(27.0)	0.34 (8.6)	4900 (337)	2400 (165)
1/2	1/4	-THC-FN8-FN4	1.75(44.4)	1.06(27.0)	0.45(11.4)	4900 (337)	2400 (165)
1/2	3/8	-THC-FN8-FN6	1.78(45.2)	1.06(27.0)	0.59 15.0)	4900 (337)	2400 (165)
1/2	1/2	-THC-FN8	1.56(39.6)	1.06(27.0)	0.73(18.5)	4900 (337)	2400 (165)
3/4	1/4	-THC-FN12-FN4	1.81(46.0)	1.31(33.3)	0.45(11.4)	4600 (316)	2300 (158)
3/4	1/2	-THC-FN12-FN8	2.06(52.3)	1.31(33.3)	0.73(18.5)	4600 (316)	2300 (158)
3/4	3/4	-THC-FN12	1.62(41.1)	1.31(33.3)	0.94(23.9)	4600 (316)	2300 (158)
1	1/2	-THC-FN16-FN8	2.19(55.6)	1.63(41.3)	0.73(18.5)	4400 (303)	2200 (151)
1	3/4	-THC-FN16-FN12	2.25(57.2)	1.63(41.3)	0.94(23.9)	4400 (303)	2200 (151)
1	1	-THC-FN16	2.00(50.8)	1.63(41.3)	1.17(29.7)	4400 (303)	2200 (151)
1 1/4	1	-THC-FN20	2.25(57.2)	21.3(54.0)	1.17(29.7)	4400 (303)	2200 (151)
1 1/4	1 1/4	-THC-FN20	2.00(50.8)	21.3(54.0)	1.49(37.8)	4400 (303)	2200 (151)
Heavy-Wall Female NPT Threads							
1/16	1/16	-THC-FN1-10K	0.78(19.8)	0.56 14.3)	0.19(4.8)	10000(689)	-
1/8	1/8	-THC-FN2-10K	0.81(20.6)	0.56 14.3)	0.34(8.6)	10000(689)	-
1/4	1/4	-THC-N4-10K	1.19(30.2)	0.75(19.1)	0.45(11.4)	10000(689)	-
3/8	3/8	-THC-FN6-10K	1.31(33.3)	1.06(27.0)	0.59(15.0)	10000(689)	-
1/2	1/2	-THC-N8-10K	1.56(39.6)	1.50(38.1)	0.73(18.5)	10000(689)	-
3/4	3/4	-THC-FN12-10K	1.62(41.1)	1.63(41.3)	0.94(23.9)	10000(689)	-
1	1	-THC-FN16-10K	2.00(50.8)	2.00 (50.8)	1.17(29.7)	10000(689)	-

Hex Couplings

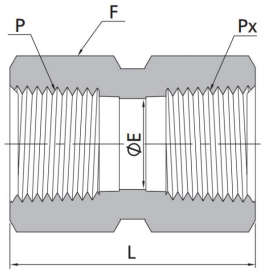

Female ISO Tapered Threads							
P-RT Size	Px-RT Size	Basic Ordering Number	Dimension,in(mm)			Working Pressure psig(bar)	
			L	F (Hex)	E	316SS, Steel	Brass
1/8	1/8	-THC-FR2	0.81(20.6)	0.56(14.3)	0.33 (8.4)	6500 (447)	3200 (220)
1/4	1/4	-THC-FR4	1.19(30.2)	0.75(19.1)	0.44(11.2)	6600 (454)	3300 (227)
3/8	3/8	-THC-FR6	1.31(33.3)	0.87(22.2)	0.58(14.7)	5300 (365)	2600 (179)
1/2	1/2	-THC-FR8	1.56(39.6)	1.06(27.0)	0.72(18.3)	4900 (337)	2400 (165)
3/4	3/4	-THC-FR12	1.62(41.1)	1.31(33.3)	0.94(23.9)	4600 (316)	2300 (158)
1	1	-THC-FR16	2.00(50.8)	1.63(41.3)	1.17(29.7)	4400 (303)	2200 (151)

Union Ball Joints

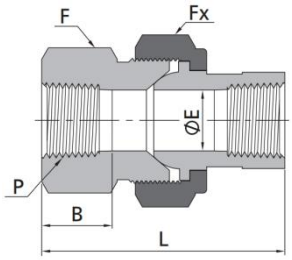

Female NPT Threads							
P-NPT Size	Basic Ordering Number	Dimension,in(mm)					Working Pressure psig(bar)
		L	F	Fx (Hex)	B	E	316SS, Steel
1/8	-TUJ-FN2	1.81(46.0)	0.94(23.8)	1.13(28.6)	0.41(10.4)	0.27(6.8)	8400(578)
1/4	-TUJ-FN4	2.34(59.4)	1.19(30.2)	1.37(34.9)	0.59(15.0)	0.36(9.1)	6600(454)
3/8	-TUJ-FN6	2.50(63.5)	1.31(33.3)	1.50(38.1)	0.59(15.0)	0.52(13.2)	5300(365)
1/2	-TUJ-FN8	2.69(68.3)	1.63(41.3)	1.75(44.5)	0.78 (19.8)	0.62(15.7)	6000(410)
3/4	-TUJ-FN12	3.12(79.2)	1.87(47.6)	2.13(54.0)	0.81(20.6)	0.88(22.4)	4600(316)
1	-TUJ-FN16	3.56(90.4)	2.37(60.3)	2.50(63.5)	1.00(25.4)	1.03(26.2)	6800(468)

Female NPT Threads							
P-NPT Size	Basic Ordering Number	Dimension,in(mm)					Working Pressure psig(bar)
		L	F	Fx (Hex)	B	E	316SS, Steel
1/8	-TUJ-FR2	1.81 (46.0)	0.94 (23.8)	1.13(28.6)	0.41(10.4)	0.27 (6.8)	8400 (578)
1/4	-TUJ-FR4	2.34 (59.4)	1.19 (30.2)	1.37(34.9)	0.59(15.0)	0.36 (9.1)	6600 (454)
3/8	-TUJ-FR6	2.50 (63.5)	1.31 (33.3)	1.50(38.1)	0.59(15.0)	0.52(13.2)	5300 (365)
1/2	-TUJ-FR8	2.69 (68.3)	1.63 (41.3)	1.75(44.5)	0.78 (19.8)	0.62(15.7)	6000 (410)
3/4	-TUJ-FR12	3.12 (79.2)	1.87 (47.6)	2.13(54.0)	0.81(20.6)	0.88(22.4)	4600 (316)
1	-TUJ-FR16	3.56 (90.4)	2.37 (60.3)	2.50(63.5)	1.00(25.4)	1.03(26.2)	6800 (468)

Male Elbows

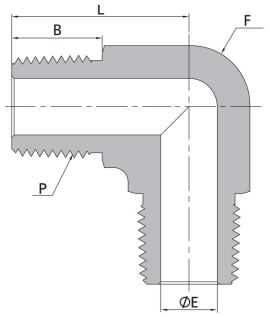

Male NPT Threads							
P-NPT Size	Basic Ordering Number	Dimension,in(mm)				Working Pressure psig(bar)	
		L	F	B	E	316SS, Steel	Brass
1/16	-TME-MN1	0.72 (18.3)	0.37 (9.5)	0.38 (9.7)	0.12(3.0)	11000(757)	5500(378)
1/8	-TME-MN2	0.88 (22.4)	0.44(11.1)	0.38 (9.7)	0.19(4.8)	10000(689)	5000(344)
1/4	-TME-MN4	1.05 (26.7)	0.50(12.7)	0.56(14.2)	0.28(7.1)	8000 (551)	4000(275)
3/8	-TME-MN6	1.17 (29.7)	0.69(17.5)	0.56(14.2)	0.38(9.6)	7800 (537)	3900(268)
1/2	-TME-MN8	1.45 (36.8)	0.81(20.6)	0.75(19.1)	0.47(11.9)	7700 (530)	3800(261)
3/4	-TME-MN12	1.59 (40.4)	1.06(27.0)	0.75(19.1)	0.62(15.7)	7300 (502)	3600(248)
1	-TME-MN16	1.97 (50.0)	1.37(34.9)	0.94(23.9)	0.88(22.4)	5300 (365)	2600(179)

Male ISO Tapered Threads							
P-RT Size	Basic Ordering Number	Dimension,in(mm)				Working Pressure psig(bar)	
		L	F	B	E	316SS, Steel	Brass
1/16	-TME-MR1	0.72(18.3)	0.37(9.5)	0.38 (9.7)	0.12(3.0)	11000(757)	5500(378)
1/8	-TME-MR2	0.88(22.4)	0.44(11.1)	0.38 (9.7)	0.19(4.8)	10000(689)	5000(344)
1/4	-TME-MR4	1.05(26.7)	0.50(12.7)	0.56(14.)	0.28(7.1)	8000 (551)	4000(275)
3/8	-TME-MR6	1.17(29.7)	0.69(17.5)	0.56(14.)	0.38(9.6)	7800 (537)	3900(268)
1/2	-TME-MR8	1.45(36.8)	0.81(20.6)	0.75(19.)	0.47(11.9)	7700 (530)	3800(261)
3/4	-TME-MR12	1.59(40.4)	1.06(27.0)	0.75(19.1)	0.62(15.7)	7300 (502)	3600(248)
1	-TME-MR16	1.97(50.0)	1.37(34.9)	0.94(23.9)	0.88(22.4)	5300 (365)	2600(179)

Female Elbows

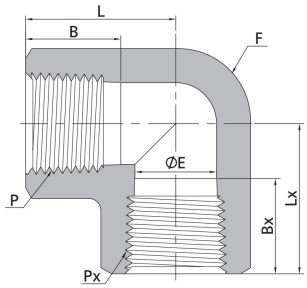

Female NPT Threads										
P-NPT Size	Px-NPT Size	Basic Ordering Number	Dimension,in(mm)						Working Pressure psig(bar)	
			L	F (Flat)	B	E	Lx	Bx	316SS,Steel	Brass
1/16	1/16	-TFE-FN1	0.86 (21.8)	0.44 (11.1)	0.39 (9.9)	0.19 (4.8)	0.86 (21.8)	0 . 3 9 (9.9)	6700 (460)	3300 (227)
1/8	1/8	-TFE-FN2	1.04 (26.4)	0.50 (12.7)	0.41 (10.4)	0.28 (7.1)	1.04 (26.4)	0.41 (10.4)	6200 (427)	3100 (213)
1/4	1/8	-TFE-FN4-FN2	1.17 (29.7)	0.69 (17.5)	0.59 (15.0)	0.28 (7.1)	1.17 (29.7)	0.41 (10.4)	7200 (496)	3600 (248)
1/4	1/4	-TFE-FN4	1.17 (29.7)	0.69 (17.5)	0.59 (15.0)	0.41 (10.4)	1.17 (29.7)	0.59 (15.0)	7200 (496)	3600 (248)
3/8	3/8	-TFE-FN6	1.42 (36.1)	0.81 (20.6)	0.59 (15.0)	0.50 (12.7)	1.42 (36.1)	0.59 (15.0)	5600 (385)	2800 (192)
1/2	1/2	-TFE-FN8	1.56 (39.6)	1.00 (25.4)	0.78 (19.8)	0.67 (17.1)	1.56 (39.6)	0.78 (19.8)	5600 (385)	2800 (192)
3/4	3/4	-TFE-FN12	1.92 (48.8)	1.25 (31.8)	0.81 (20.6)	0.88 (22.4)	1.92 (48.8)	0.81 (20.6)	5100 (351)	2500 (172)
1	1	-TFE-FN16	1.91 (48.5)	1.69 (42.9)	1.00 (25.4)	1.11 (28.1)	1.91 (48.5)	1.00 (25.4)	6400 (440)	3200 (220)
1 1/4	1 1/4	TFE-FN20	2.35 (59.8)	2.00 (50.8)	1.00 (25.4)	1.09 (27.7)	2.35 (59.8)	1.00 (25.4)	3100 (213)	1600 (110)

Female ISO Tapered Threads										
P-RT Size	Px-RT Size	Basic Ordering Number	Dimension,in(mm)						Working Pressure psig(bar)	
			L	F (Flat)	B	E	Lx	Bx	316SS,Steel	Brass
1/16	1/16	-TFE-FR1	0.86 (21.8)	0.44 (11.1)	0.39 (9.9)	0.19 (4.8)	0.86 (21.8)	0.39 (9.9)	6700 (460)	3300 (227)
1/8	1/16	-TFE-FR2-FR1	1.04 (26.4)	0.50 (12.7)	0.41 (10.4)	0.19 (4.8)	1.04 (26.4)	0.39 (9.9)	6200 (427)	3100 (213)
1/8	1/8	-TFE-FRT2	1.04 (26.4)	0.50 (12.7)	0.41 (10.4)	0.28 (7.1)	1.04 (26.4)	0.41 (10.4)	6200 (427)	3100 (213)
1/4	1/8	-TFE-FR4-FR2	1.17 (29.7)	0.69 (17.5)	0.59 (15.0)	0.28 (7.1)	1.17 (29.7)	0.41 (10.4)	7200 (496)	3600 (248)
1/4	1/4	-TFE-FR4	1.17 (29.7)	0.69 (17.5)	0.59 (15.0)	0.41 (10.4)	1.17 (29.7)	0.59 (15.0)	7200 (496)	3600 (248)
3/8	3/8	-TFE-FR6	1.42 (36.1)	0.81 (20.6)	0.59 (15.0)	0.50 (12.7)	1.42 (36.1)	0.59 (15.0)	5600 (385)	2800 (192)
1/2	1/2	-TFE-FR8	1.56 (39.6)	1.00 (25.4)	0.78 (19.8)	0.67 (17.1)	1.56 (39.6)	0.78 (19.8)	5600 (385)	2800 (192)
3/4	3/4	-TFE-FR12	1.92 (48.8)	1.25 (31.8)	0.81 (20.6)	0.88 (22.4)	1.92 (48.8)	0.81 (20.6)	5100 (351)	2500 (172)
1	1	-TFE-FR16	1.91 (48.5)	1.69 (42.9)	1.00 (25.4)	1.11 (28.1)	1.91 (48.5)	1.00 (25.4)	6400 (440)	3200 (220)

45° Female Elbows

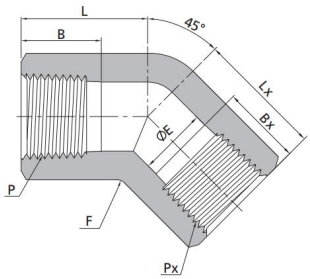

Female NPT Threads										
P-NPT Size	Px-NP T Size	Basic Ordering Number	Dimension,in(mm)						Working Pressure psig(bar)	
			L	F (Flat)	B	E	Lx	Bx	316SS,Steel	Brass
1/16	1/16	-TFV-FN1	0.66 (16.8)	0.44 (11.1)	0.39 (9.9)	0.19 (4.8)	0.66 (16.8)	0.39 (9.9)	6700 (460)	3300(227)
1/8	1/16	-TFV-FN2-FN1	0.80 (20.2)	0.50 (12.7)	0.41 (10.4)	0.19 (4.8)	0.80 (20.2)	0.39 (9.9)	6200 (427)	3100(213)
1/8	1/8	-TFV-FN2	0.80 (20.2)	0.50 (12.7)	0.41 (10.4)	0.28 (7.1)	0.80 (20.2)	0.41 (10.4)	6200 (427)	3100(213)
1/4	1/8	-TFV-FN4-FN2	1.00 (25.4)	0.69 (17.5)	0.59 (15.0)	0.28 (7.1)	1.00 (25.4)	0.41 (10.4)	7200 (496)	3600(248)
1/4	1/4	-TFV-FN4	1.00 (25.4)	0.69 (17.5)	0.59 (15.0)	0.41 (10.4)	1.00 (25.4)	0.59 (15.0)	7200 (496)	3600(248)
3/8	3/8	-TFV-FN6	1.06 (27.0)	0.81 (20.6)	0.59 (15.0)	0.50 (12.7)	1.06 (27.0)	0.59 (15.0)	5600 (385)	2800(192)
1/2	1/2	-TFV-FN8	1.26 (32.0)	1.00 (25.4)	0.78 (19.8)	0.67 (17.1)	1.26 (32.0)	0.78 (19.8)	5600 (385)	2800(192)
3/4	3/4	-TFV-FN12	1.36 (34.5)	1.25 (31.8)	0.81 (20.6)	0.88 (22.4)	1.36 (34.5)	0.81 (20.6)	5100 (351)	2500(172)
1	1	-TFV-FN16	1.81 (46.0)	1.69 (42.9)	1.00 (25.4)	1.11 (28.1)	1.81 (46.0)	1.00 (25.4)	6400 (440)	3200(220)
1 1/4	1 1/4	-TFV-FN20	1.70 (43.2)	2.00 (50.8)	1.00 (25.4)	1.09 (27.7)	1.70 (43.2)	1.00 (25.4)	3100 (213)	1600(110)
1 1/2	1 1/2	-TFV-FN24	1.81 (46.0)	2.50 (63.5)	1.09 (27.7)	1.34 (34.0)	1.81 (46.0)	1.09 (27.7)	5100 (351)	2500(172)

Female ISO Tapered Threads										
P-RT Size	Px-RT Size	Basic Ordering Number	Dimension,in(mm)						Working Pressure psig(bar)	
			L	F (Flat)	B	E	Lx	Bx	316SS,Steel	Brass
1/16	1/16	-TFV-FR1	0.66 (16.8)	0.44 (11.1)	0.39 (9.9)	0.19 (4.8)	0.66 (16.8)	0.39 (9.9)	6700 (460)	3300(227)
1/8	1/16	-TFV-FR2-FR1	0.80 (20.2)	0.50 (12.7)	0.41 (10.4)	0.19 (4.8)	0.80 (20.2)	0.39 (9.9)	6200 (427)	3100(213)
1/8	1/8	-TFV-FR2	0.80 (20.2)	0.50 (12.7)	0.41 (10.4)	0.28 (7.1)	0.80 (20.2)	0.41 (10.4)	6200 (427)	3100(213)
1/4	1/8	-TFV-RT4-FR2	1.00 (25.4)	0.69 (17.5)	0.59 (15.0)	0.28 (7.1)	1.00 (25.4)	0.41 (10.4)	7200 (496)	3600(248)
1/4	1/4	-TFV-FR4	1.00 (25.4)	0.69 (17.5)	0.59 (15.0)	0.41 (10.4)	1.00 (25.4)	0.59 (15.0)	7200 (496)	3600(248)
3/8	3/8	-TFV-FR6	1.06 (27.0)	0.81 (20.6)	0.59 (15.0)	0.50 (12.7)	1.06 (27.0)	0.59 (15.0)	5600 (385)	2800(192)
1/2	1/2	-TFV-FR8	1.26 (32.0)	1.00 (25.4)	0.78 (19.8)	0.67 (17.1)	1.26 (32.0)	0.78 (19.8)	5600 (385)	2800(192)
3/4	3/4	-TFV-FR12	1.36 (34.5)	1.25 (31.8)	0.81 (20.6)	0.88 (22.4)	1.36 (34.5)	0.81 (20.6)	5100 (351)	2500(172)
1	1	-TFV-FR16	1.81 (46.0)	1.69 (42.9)	1.00 (25.4)	1.11 (28.1)	1.81 (46.0)	1.00 (25.4)	6400 (440)	3200(220)
1 1/4	1 1/4	-TFV-FR20	1.70 (43.2)	2.00 (50.8)	1.00 (25.4)	1.09 (27.7)	1.70 (43.2)	1.00 (25.4)	3100 (213)	1600(110)
1 1/2	1 1/2	-TFV-FR24	1.81 (46.0)	2.50 (63.5)	1.09 (27.7)	1.34 (34.0)	1.81 (46.0)	1.09 (27.7)	5100 (351)	2500(172)

Street Elbows

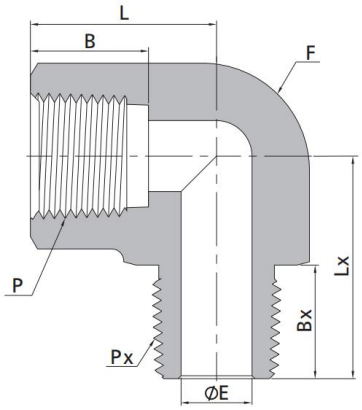

Female NPT Threads to Male NPT Thread										
P-NPT Size	Px-NP T Size	Basic Ordering Number	Dimension,in(mm)						Working Pressure psig(bar)	
			L	F (Flat)	B	E	Lx	Bx	316SS,Steel	Brass
1/16	1/16	-TSE-FN1-MN1	0.86 (21.8)	0.44 (11.1)	0.39 (9.9)	0.12 (3.0)	0.88 (22.4)	0.38 (9.7)	9200(633)	4600(316)
1/16	1/8	-TSE-FN1-MN2	0.86 (21.8)	0.44 (11.1)	0.39 (9.9)	0.19 (4.8)	0.88 (22.4)	0.38 (9.7)	9200 (633)	4600 (316)
1/16	1/4	-TSE-FN1-MN4	0.88 (22.4)	0.56 (14.3)	0.39 (9.9)	0.19 (4.8)	1.09 (27.7)	0.56 (14.2)	8000 (551)	4000 (275)
1/16	3/8	-TSE-FN1-MN6	0.88 (22.4)	0.69 (17.5)	0.39 (9.9)	0.19 (4.8)	1.17 (29.7)	0.56 (14.2)	7800 (537)	3900 (268)
1/8	1/16	-TSE-FN2-MN1	1.04 (26.4)	0.50 (12.7)	0.41 (10.4)	0.12 (3.0)	0.87 (22.1)	0.38 (9.7)	6200 (426)	3100 (213)
1/8	1/8	-TSE-FN2-MN2	1.04 (26.4)	0.50 (12.7)	0.41 (10.4)	0.19 (4.8)	0.87 (22.1)	0.38 (9.7)	6200 (426)	3100 (213)
1/8	1/4	-TSE-FN2-MN4	0.88 (22.4)	0.56 (14.3)	0.41 (10.4)	0.28 (7.1)	1.09 (27.7)	0.56 (14.2)	6500 (447)	3200 (220)
1/8	3/8	-TSE-FN2-MN6	0.88 (22.4)	0.69 (17.5)	0.41 (10.4)	0.28 (7.1)	1.17 (29.7)	0.56 (14.2)	7800 (537)	3900 (268)
1/8	1/2	-TSE-FN2-MN8	0.95 (24.1)	0.81 (20.6)	0.41 (10.4)	0.28 (7.1)	1.45 (36.8)	0.75 (19.1)	7700 (530)	3800 (261)
1/8	3/4	-TSE-FN2-MN12	1.00 (25.4)	1.06 (27.0)	0.41 (10.4)	0.28 (7.1)	1.59 (40.4)	0.75 (19.1)	7300 (502)	3600 (248)
1/8	1	-TSE-FN2-MN16	1.04 (26.4)	1.37 (34.9)	0.41 (10.4)	0.28 (7.1)	1.97 (50.0)	0.94 (23.9)	5300 (365)	2600 (179)
1/4	1/8	-TSE-FN4-MN2	1.17 (29.7)	0.69 (17.5)	0.59 (15.0)	0.19 (4.8)	1.00 (25.4)	0.38 (9.7)	7200 (496)	3600 (248)
1/4	1/4	-TSE-FN4-MN4	1.17 (29.7)	0.69 (17.5)	0.59 (15.0)	0.28 (7.1)	1.17 (29.7)	0.56 (14.2)	7200 (496)	3600 (248)
1/4	3/8	-TSE-FN4-MN6	1.17 (29.7)	0.69 (17.5)	0.59 (15.0)	0.34 (8.6)	1.17 (29.7)	0.56 (14.2)	7200 (496)	3600 (248)
1/4	1/2	-TSE-FN4-MN8	1.00 (25.4)	0.81 (20.6)	0.59 (15.0)	0.34 (8.6)	1.45 (36.8)	0.75 (19.1)	7200 (496)	3600 (248)
1/4	3/4	-TSE-FN4-MN12	1.00 (25.4)	1.06 (27.0)	0.59 (15.0)	0.34 (8.6)	1.59 (40.4)	0.75 (19.1)	7300 (502)	3600 (248)
1/4	1	-TSE-FN4-MN16	1.63 (41.4)	1.37 (34.9)	0.59 (15.0)	0.34 (8.6)	1.97 (50.0)	0.94 (23.9)	5300 (365)	2600 (179)
3/8	1/4	-TSE-FN6-MN4	1.42 (36.1)	0.81 (20.6)	0.59 (15.0)	0.28 (7.1)	1.26 (32.0)	0.56 (14.2)	5600 (385)	2800 (192)
3/8	3/8	-TSE-FN6-MN6	1.42 (36.1)	0.81 (20.6)	0.59 (15.0)	0.38 (9.6)	1.26 (32.0)	0.56 (14.2)	5600 (385)	2800 (192)
3/8	1/2	-TSE-FN6-MN8	1.42 (36.1)	0.81 (20.6)	0.59 (15.0)	0.47(11.9)	1.45 (36.8)	0.75 (19.1)	5600 (385)	2800 (192)
3/8	3/4	-TSE-FN6-MN12	1.23 (31.2)	1.06 (27.0)	0.59 (15.0)	0.47(11.9)	1.59 (40.4)	0.75 (19.1)	7300 (502)	3600 (248)
3/8	1	-TSE-FN6-MN16	1.63 (41.4)	1.37 (34.9)	0.59 (15.0)	0.47(11.9)	1.97 (50.0)	0.94 (23.9)	5300 (365)	2600 (179)
1/2	1/4	-TSE-FN8-MN4	1.56 (39.6)	1.00 (25.4)	0.78 (19.8)	0.28 (7.1)	1.38 (35.1)	0.56 (14.2)	5600 (385)	2800 (192)
1/2	3/8	-TSE-FN8-MN6	1.56 (39.6)	1.00 (25.4)	0.78 (19.8)	0.38 (9.6)	1.38 (35.1)	0.56 (14.2)	5600 (385)	2800 (192)
1/2	1/2	-TSE-FN8-MN8	1.56 (39.6)	1.00 (25.4)	0.78 (19.8)	0.47(11.9)	1.56 (39.6)	0.75 (19.1)	5600 (385)	2800 (192)
1/2	3/4	-TSE-FN8-MN12	1.23 (31.2)	1.06 (27.0)	0.78 (19.8)	0.62(15.7)	1.59 (40.4)	0.75 (19.1)	5600 (385)	2800 (192)
1/2	1	-TSE-FN8-MN16	1.63 (41.4)	1.37 (34.9)	0.78 (19.8)	0.62(15.7)	1.97 (50.0)	0.94 (23.9)	5300 (365)	2600 (179)
3/4	3/4	-TSE-FN12-MN12	1.92 (48.8)	1.25 (31.8)	0.81 (20.6)	0.62(15.7)	1.67 (42.4)	0.75 (19.1)	5100 (351)	2500 (172)
1	1	-TSE-FN16-MN16	1.91 (48.5)	1.69 (42.9)	1.00 (25.4)	0.88(22.4)	0.88 (22.4)	0.94 (23.9)	5300 (365)	2600 (179)
11/4	11/4	-TSE-FN20-MN20	2.38(60.5)	2.00(50.8)	1.00(25.4)	1.25(31.8)	2.38(60.5)	0.94(23.9)	3100(213)	1600(110)

Street Elbows

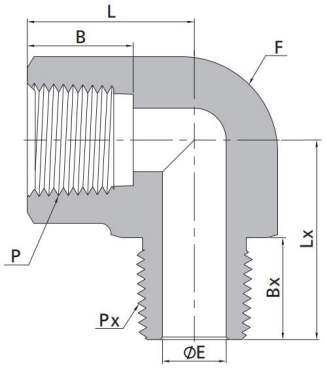

Female ISO Tapered Threads to Male ISO Tapered Thread										
P-RT Size	Px-RT Size	Basic Ordering Number	Dimension,in(mm)						Working Pressure psig(bar)	
			L	F (Flat)	B	E	Lx	Bx	316SS,Steel	Brass
1/16	1/16	-TSE-FR1-MR1	0.86 (21.8)	0.44 (11.1)	0.39 (9.9)	0.12 (3.0)	0.88 (22.4)	0.38 (9.7)	9200(633)	4600(316)
1/16	1/8	-TSE-FR1-MR2	0.86 (21.8)	0.44 (11.1)	0.39 (9.9)	0.19 (4.8)	0.88 (22.4)	0.38 (9.7)	9200 (633)	4600 (316)
1/16	1/4	-TSE-FR1-MR4	0.88 (22.4)	0.56 (14.3)	0.39 (9.9)	0.19 (4.8)	1.09 (27.7)	0.56 (14.2)	8000 (551)	4000 (275)
1/16	3/8	-TSE-FR1-MR6	0.88 (22.4)	0.69 (17.5)	0.39 (9.9)	0.19 (4.8)	1.17 (29.7)	0.56 (14.2)	7800 (537)	3900 (268)
1/8	1/16	-TSE-FR2-MR1	1.04 (26.4)	0.50 (12.7)	0.41 (10.4)	0.12 (3.0)	0.87 (22.1)	0.38 (9.7)	6200 (426)	3100 (213)
1/8	1/8	-TSE-FR2-MR2	1.04 (26.4)	0.50 (12.7)	0.41 (10.4)	0.19 (4.8)	0.87 (22.1)	0.38 (9.7)	6200 (426)	3100 (213)
1/8	1/4	-TSE-FR2-MR4	0.88 (22.4)	0.56 (14.3)	0.41 (10.4)	0.28 (7.1)	1.09 (27.7)	0.56 (14.2)	6500 (447)	3200 (220)
1/8	3/8	-TSE-FR2-MR6	0.88 (22.4)	0.69 (17.5)	0.41 (10.4)	0.28 (7.1)	1.17 (29.7)	0.56 (14.2)	7800 (537)	3900 (268)
1/8	1/2	-TSE-FR2-MR8	0.95 (24.1)	0.81 (20.6)	0.41 (10.4)	0.28 (7.1)	1.45 (36.8)	0.75 (19.1)	7700 (530)	3800 (261)
1/8	3/4	-TSE-FR2-MR12	1.00 (25.4)	1.06 (27.0)	0.41 (10.4)	0.28 (7.1)	1.59 (40.4)	0.75 (19.1)	7300 (502)	3600 (248)
1/8	1	-TSE-FRT2-MR16	1.04 (26.4)	1.37 (34.9)	0.41 (10.4)	0.28 (7.1)	1.97 (50.0)	0.94 (23.9)	5300 (365)	2600 (179)
1/4	1/8	-TSE-FR4-MR2	1.17 (29.7)	0.69 (17.5)	0.59 (15.0)	0.19 (4.8)	1.00 (25.4)	0.38 (9.7)	7200 (496)	3600 (248)
1/4	1/4	-TSE-FR4-MR4	1.17 (29.7)	0.69 (17.5)	0.59 (15.0)	0.28 (7.1)	1.17 (29.7)	0.56 (14.2)	7200 (496)	3600 (248)
1/4	3/8	-TSE-FR4-MR6	1.17 (29.7)	0.69 (17.5)	0.59 (15.0)	0.34 (8.6)	1.17 (29.7)	0.56 (14.2)	7200 (496)	3600 (248)
1/4	1/2	-TSE-FR4-MR8	1.00 (25.4)	0.81 (20.6)	0.59 (15.0)	0.34 (8.6)	1.45 (36.8)	0.75 (19.1)	7200 (496)	3600 (248)
1/4	3/4	-TSE-FR4-MR12	1.00 (25.4)	1.06 (27.0)	0.59 (15.0)	0.34 (8.6)	1.59 (40.4)	0.75 (19.1)	7300 (502)	3600 (248)
1/4	1	-TSE-FR4-MR16	1.63 (41.4)	1.37 (34.9)	0.59 (15.0)	0.34 (8.6)	1.97 (50.0)	0.94 (23.9)	5300 (365)	2600 (179)
3/8	1/4	-TSE-FR6-MR4	1.42 (36.1)	0.81 (20.6)	0.59 (15.0)	0.28 (7.1)	1.26 (32.0)	0.56 (14.2)	5600 (385)	2800 (192)
3/8	3/8	-TSE-FR6-MR6	1.42 (36.1)	0.81 (20.6)	0.59 (15.0)	0.38 (9.6)	1.26 (32.0)	0.56 (14.2)	5600 (385)	2800 (192)
3/8	1/2	-TSE-FR6-MR8	1.42 (36.1)	0.81 (20.6)	0.59 (15.0)	0.47 (11.9)	1.45 (36.8)	0.75 (19.1)	5600 (385)	2800 (192)
3/8	3/4	-TSE-FR6-MR12	1.23 (31.2)	1.06 (27.0)	0.59 (15.0)	0.47 (11.9)	1.59 (40.4)	0.75 (19.1)	7300 (502)	3600 (248)
3/8	1	-TSE-FR6-MR16	1.63 (41.4)	1.37 (34.9)	0.59 (15.0)	0.47 (11.9)	1.97 (50.0)	0.94 (23.9)	5300 (365)	2600 (179)
1/2	1/4	-TSE-FR8-MR4	1.56 (39.6)	1.00 (25.4)	0.78 (19.8)	0.28 (7.1)	1.38 (35.1)	0.56 (14.2)	5600 (385)	2800 (192)
1/2	3/8	-TSE-FR8-MR6	1.56 (39.6)	1.00 (25.4)	0.78 (19.8)	0.38 (9.6)	1.38 (35.1)	0.56 (14.2)	5600 (385)	2800 (192)
1/2	1/2	-TSE-FR8-MR8	1.56 (39.6)	1.00 (25.4)	0.78 (19.8)	0.47 (11.9)	1.56 (39.6)	0.75 (19.1)	5600 (385)	2800 (192)
1/2	3/4	-TSE-FR8-MR12	1.23 (31.2)	1.06 (27.0)	0.78 (19.8)	0.62 (15.7)	1.59 (40.4)	0.75 (19.1)	5600 (385)	2800 (192)
1/2	1	-TSE-FR8-MR16	1.63 (41.4)	1.37 (34.9)	0.78 (19.8)	0.62 (15.7)	1.97 (50.0)	0.94 (23.9)	5300 (365)	2600 (179)
3/4	3/4	-TSE-FR12-MR12	1.92 (48.8)	1.25 (31.8)	0.81 (20.6)	0.62 (15.7)	1.67 (42.4)	0.75 (19.1)	5100 (351)	2500 (172)
3/4	1	-TSE-FR12-MR16	1.63 (41.4)	1.37 (34.9)	0.81 (20.6)	0.88 (22.4)	1.97 (50.0)	0.94 (23.9)	5100 (351)	2500 (172)
1	1	-TSE-FR16-MR16	1.91 (48.5)	1.69 (42.9)	1.00 (25.4)	0.88 (22.4)	0.88 (22.4)	0.94 (23.9)	5300 (365)	2600 (179)
11/4	11/4	-TSE-FR20-MR20	2.38(60.5)	2.00(50.8)	1.00(25.4)	1.25(31.8)	2.38(60.5)	0.94(23.9)	3100(213)	1600(110)

45° Street Elbows

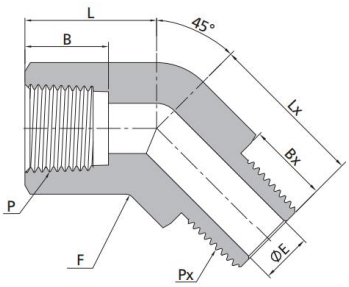

Female NPT Threads to Male NPT Thread

P-NPT Size	Px-NPT Size	Basic Ordering Number	Dimension,in(mm)						Working Pressure psig(bar)	
			L	F (Flat)	B	E	Lx	Bx	316SS, Steel	Brass
1/16	1/16	-TSV-FN1-MN1	0.66 (16.8)	0.44 (11.1)	0.39 (9.9)	0.12 (3 . 0)	0.66 (16.8)	0.38 (9.7)	9200(633)	4600(316)
1/16	1/8	-TSV-FN1-MN2	0.66 (16.8)	0.44 (11.1)	0.39 (9.9)	0.19 (4.8)	0.66 (16.8)	0.38(9.7)	9200(633)	4600(316)
1/8	1/16	-TSV-FN2-MN1	0.80 (20.2)	0.50 (12.7)	0.41 (10.4)	0.12 (3.0)	0.68 (17.2)	0.38 (9.7)	6200(426)	3100(213)
1/8	1/8	-TSV-FN2-MN2	0.80 (20.2)	0.50 (12.7)	0.41 (10.4)	0.19 (4.8)	0.68 (17.2)	0.38(9.7)	6200(426)	3100(213)
1/8	1/4	-TSV-FN2-MN4	0.66 (16.8)	0.56 (14.3)	0.41 (10.4)	0.28 (7.1)	0.86 (21.8)	0.56(14.2)	6500 (447)	3200 (220)
1/4	1/8	-TSV-FN4-MN2	1.00 (25.4)	0.69 (17.5)	0.59 (15.0)	0.19 (4.8)	0.76 (19.3)	0.38(9.7)	7200 (496)	3600 (248)
1/4	1/4	-TSV-FN4-MN4	1.00 (25.4)	0.69 (17.5)	0.59 (15.0)	0.28 (7.1)	0.76 (19.3)	0.56(14.2)	7200 (496)	3600 (248)
1/4	3/8	-TSV-FN4-MN6	1.00 (25.4)	0.69 (17.5)	0.59 (15.0)	0.34 (8.6)	0.94 (23.8)	0.56(14.2	7200 (496)	3600 (248)
3/8	1/4	-TSV-FN6-MN4	1.06 (27.0)	0.81 (20.6)	0.59 (15.0)	0.28 (7.1)	0.95 (24.2)	0.56(14.2	5600 (385)	2800 (192)
3/8	3/8	-TSV-FN6-MN6	1.06 (27.0)	0.81 (20.6)	0.59 (15.0)	0.38 (9.6)	0.95 (24.2)	0.56(14.2	5600 (385)	2800 (192)
3/8	1/2	-TSV-FN6-MN8	1.06 (27.0)	0.81 (20.6)	0.59 (15.0)	0.47(11.9)	1.14 (29.0)	0.75(19.1)	5600 (385)	2800 (192)
1/2	1/4	-TSV-FN8-MN4	1.26 (32.0)	1.00 (25.4)	0.78 (19.8)	0.28 (7.1)	0.99 (25.2)	0.56(14.2)	5600 (385)	2800 (192)
1/2	3/8	-TSV-FN8-MN6	1.26 (32.0)	1.00 (25.4)	0.78 (19.8)	0.38 (9.6)	0.99 (25.2)	0.56(14.2)	5600 (385)	2800 (192)
1/2	1/2	-TSV-FN8-MN8	1.26 (32.0)	1.00 (25.4)	0.78 (19.8)	0.47(11.9)	1.26(32.0)	0.75(19.1)	5600(385)	2800 (192)
3/4	3/4	-TSV-FN12-MN12	1.36 (34.5)	1.25 (31.8)	0.81 (20.6)	0.62(15.7)	1.36 (34.5)	0.75 (19.1)	5100 (351)	2500 (172)
1	1	-TSV-FN16-MN16	1.81 (46.0)	1.69 (42.9)	1.00 (25.4)	0.88(22.4)	1.81 (46.0)	0.94(23.9)	5300 (365)	2600 (179)
1 1/4	1 1/4	-TSV-FN20-MN20	2.00 (50.8)	2.00 (50.8)	1.00 (25.4)	1.25(31.8)	2.00 (50.8)	0.94(23.9)	3100 (213)	1600 (110)

Female ISO Tapered Threads to Male ISO Tapered Thread

P-RT Size	Px-RT Size	Basic Ordering Number	Dimension,in(mm)						Working Pressure psig(bar)	
			L	F (Flat)	B	E	Lx	Bx	316SS, Steel	Brass
1/16	1/16	-TSV-FR1-MR1	0.66 (16.8)	0.44 (11.1)	0.39 (9.9)	0.12 (3 . 0)	0.66 (16.8)	0.38 (9.7)	9200(633)	4600(316)
1/16	1/8	-TSV-FR1-MR2	0.66 (16.8)	0.44 (11.1)	0.39 (9.9)	0.19 (4.8)	0.66 (16.8)	0.38(9.7)	9200(633)	4600(316)
1/8	1/16	-TSV-FR2-MR1	0.80 (20.2)	0.50 (12.7)	0.41 (10.4)	0.12 (3.0)	0.68 (17.2)	0.38 (9.7)	6200(426)	3100(213)
1/8	1/8	-TSV-FR2-MR2	0.80 (20.2)	0.50 (12.7)	0.41 (10.4)	0.19 (4.8)	0.68 (17.2)	0.38(9.7)	6200(426)	3100(213)
1/8	1/4	-TSV-FR2-MR4	0.66 (16.8)	0.56 (14.3)	0.41 (10.4)	0.28 (7.1)	0.86 (21.8)	0.56(14.2)	6500 (447)	3200 (220)
1/4	1/8	-TSV-FR4-MR2	1.00 (25.4)	0.69 (17.5)	0.59 (15.0)	0.19 (4.8)	0.76 (19.3)	0.38(9.7)	7200 (496)	3600 (248)
1/4	1/4	-TSV-FR4-MR4	1.00 (25.4)	0.69 (17.5)	0.59 (15.0)	0.28 (7.1)	0.76 (19.3)	0.56(14.2)	7200 (496)	3600 (248)
1/4	3/8	-TSV-FR4-MR6	1.00 (25.4)	0.69 (17.5)	0.59 (15.0)	0.34 (8.6)	0.94 (23.8)	0.56(14.2	7200 (496)	3600 (248)
3/8	1/4	-TSV-FR6-MR4	1.06 (27.0)	0.81 (20.6)	0.59 (15.0)	0.28 (7.1)	0.95 (24.2)	0.56(14.2	5600 (385)	2800 (192)
3/8	3/8	-TSV-FR6-MR6	1.06 (27.0)	0.81 (20.6)	0.59 (15.0)	0.38 (9.6)	0.95 (24.2)	0.56(14.2	5600 (385)	2800 (192)
3/8	1/2	-TSV-FR6-MR8	1.06 (27.0)	0.81 (20.6)	0.59 (15.0)	0.47(11.9)	1.14 (29.0)	0.75(19.1)	5600 (385)	2800 (192)
1/2	1/4	-TSV-FR8-MR4	1.26 (32.0)	1.00 (25.4)	0.78 (19.8)	0.28 (7.1)	0.99 (25.2)	0.56(14.2)	5600 (385)	2800 (192)
1/2	3/8	-TSV-FR8-MR6	1.26 (32.0)	1.00 (25.4)	0.78 (19.8)	0.38 (9.6)	0.99 (25.2)	0.56(14.2)	5600 (385)	2800 (192)
1/2	1/2	-TSV-FR8-MR8	1.26 (32.0)	1.00 (25.4)	0.78 (19.8)	0.47(11.9)	1.26(32.0)	0.75(19.1)	5600(385)	2800 (192)
3/4	3/4	-TSV-FR12-MR12	1.36 (34.5)	1.25 (31.8)	0.81 (20.6)	0.62(15.7)	1.36 (34.5)	0.75 (19.1)	5100 (351)	2500 (172)
1	1	-TSV-FR16-MR16	1.81 (46.0)	1.69 (42.9)	1.00 (25.4)	0.88(22.4)	1.81 (46.0)	0.94(23.9)	5300 (365)	2600 (179)
1 1/4	1 1/4	-TSV-FR20-MR20	2.00 (50.8)	2.00 (50.8)	1.00 (25.4)	1.25(31.8)	2.00 (50.8)	0.94(23.9)	3100 (213)	1600 (110)

Male Tees

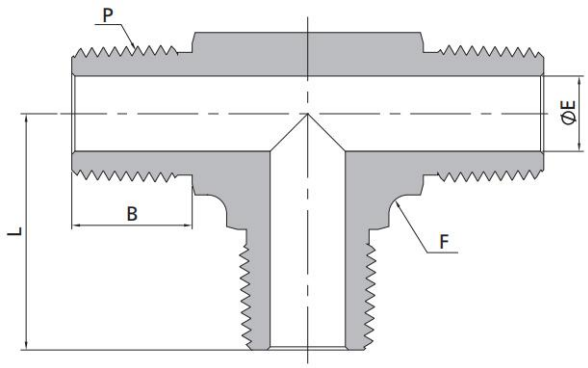

Male NPT Threads

P-NPT Size	Basic Ordering Number	Dimension,in(mm)				Working Pressure psig(bar)	
		L	F (Hex)	B	E	316SS,Steel	Brass
1/16	-TMT-MN1	0.72 (18.3)	0.37 (9.5)	0.38 (9.7)	0.12 (3.0)	11000 (757)	5500 (378)
1/8	-TMT-MN2	0.88 (22.4)	0.44 (11.1)	0.38 (9.7)	0.19 (4.8)	10000 (689)	5000 (344)
1/4	-TMT-MN4	1.05 (26.7)	0.50 (12.7)	0.56 (14.2)	0.28 (7.1)	8000 (551)	4000 (275)
3/8	-TMT-MN6	1.17 (29.7)	0.69 (17.5)	0.56 (14.2)	0.38 (9.6)	7800 (537)	3900 (268)
1/2	-TMT-MN8	1.45 (36.8)	0.81 (20.6)	0.75 (19.1)	0.47 (11.9)	7700 (530)	3800 (261)
3/4	-TMT-MN12	1.67 (42.4)	1.06 (27.0)	0.75 (19.1)	0.62 (15.7)	7300 (502)	3600 (248)
1	-TMT-MN16	1.94 (49.3)	1.37 (34.9)	0.94 (23.9)	0.88 (22.4)	5300(365)	2600 (179)
1 1/4	-TMT-MN20	2.22 (56.4)	1.69 (42.9)	0.94 (23.9)	1.09 (27.7)	6000 (410)	3000 (200)
1 1/2	-TMT-MN24	2.64 (67.1)	1.87 (47.6)	1.03 (26.2)	1.34 (34.0)	5000 (344)	2500 (172)

Male ISO Tapered Threads

P-RT Size	Basic Ordering Number	Dimension,in(mm)				Working Pressure psig(bar)	
		L	F (Hex)	B	E	316SS,Steel	Brass
1/16	-TMT-MR1	0.72 (18.3)	0.37 (9.5)	0.38 (9.7)	0.12 (3.0)	11000 (757)	5500 (378)
1/8	-TMT-MR2	0.88 (22.4)	0.44 (11.1)	0.38 (9.7)	0.19 (4.8)	10000 (689)	5000 (344)
1/4	-TMT-MR4	1.05 (26.7)	0.50 (12.7)	0.56 (14.2)	0.28 (7.1)	8000 (551)	4000 (275)
3/8	-TMT-MR6	1.17 (29.7)	0.69 (17.5)	0.56 (14.2)	0.38 (9.6)	7800 (537)	3900 (268)
1/2	-TMT-MR8	1.45 (36.8)	0.81 (20.6)	0.75 (19.1)	0.47 (11.9)	7700 (530)	3800 (261)
3/4	-TMT-MR12	1.67 (42.4)	1.06 (27.0)	0.75 (19.1)	0.62 (15.7)	7300 (502)	3600 (248)
1	-TMT-MR16	1.94 (49.3)	1.37 (34.9)	0.94 (23.9)	0.88 (22.4)	5300 (365)	2600 (179)
1 1/4	-TMT-MR20	2.22 (56.4)	1.69 (42.9)	0.94 (23.9)	1.09 (27.7)	6000 (410)	3000 (200)
1 1/2	-TMT-MR24	2.64 (67.1)	1.87 (47.6)	1.03 (26.2)	1.34 (34.0)	5000 (344)	2500 (172)

Male Crosses

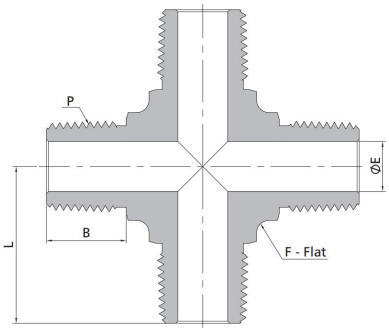

Male NPT Threads							
P-NPT Size	Basic Ordering Number	Dimension,in(mm)				Working Pressure psig(bar)	
		L	F (Hex)	B	E	316SS,Steel	Brass
1/16	-TMC-MN1	0.72 (18.3)	0.37 (9.5)	0.38 (9.7)	0.12 (3.0)	11000 (757)	5500 (378)
1/8	-TMC-MN2	0.88 (22.4)	0.44 (11.1)	0.38 (9.7)	0.19 (4.8)	10000 (689)	5000 (344)
1/4	-TMC-MN4	1.05 (26.7)	0.50 (12.7)	0.56 (14.2)	0.28 (7.1)	8000 (551)	4000 (275)
3/8	-TMC-MN6	1.17 (29.7)	0.69 (17.5)	0.56 (14.2)	0.38 (9.6)	7800 (537)	3900 (268)
1/2	-TMC-MN8	1.45 (36.8)	0.81 (20.6)	0.75 (19.1)	0.47 (11.9)	7700 (530)	3800 (261)
3/4	-TMC-MN12	1.67 (42.4)	1.06 (27.0)	0.75 (19.1)	0.62 (15.7)	7300 (502)	3600 (248)
1	-TMC-MN16	1.94 (49.3)	1.37 (34.9)	0.94 (23.9)	0.88 (22.4)	5300(365)	2600 (179)
1 1/4	-TMC-MN20	2.22 (56.4)	1.69 (42.9)	0.94 (23.9)	1.09 (27.7)	6000 (410)	3000 (200)
1 1/2	-TMC-MN24	2.64 (67.1)	1.87 (47.6)	1.03 (26.2)	1.34 (34.0)	5000 (344)	2500 (172)

Female Branch Tees

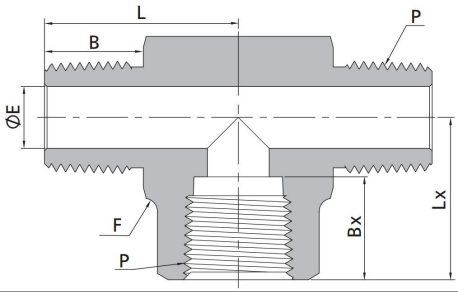

NPT Threads									
P-NPT Size	Basic Ordering Number	Dimension,in(mm)						Working Pressure psig(bar)	
		L	F (Flat)	B	E	Lx	Bx	316SS, Steel	Brass
1/16	-TFB-MN1-FN1	0.72 (18.3)	0.44 (11.1)	0.12 (3.0)	0.38 (9.7)	0.86 (21.8)	0.39 (9.9)	9200 (633)	4600 (316)
1/8	-TFB-MN2-FN2	0.87 (22.1)	0.50 (12.7)	0.19 (4.8)	0.38 (9.7)	1.04 (26.4)	0.41 (10.4)	6200 (427)	3100 (213)
1/4	-TFB-MN4-FN4	1.17 (29.7)	0.69 (17.5)	0.28 (7.1)	0.56 (14.2)	1.17 (29.7)	0.59 (15.0)	7200 (496)	3600 (248)
3/8	-TFB-MN6-FN6	1.26 (32.0)	0.81 (20.6)	0.38 (9.6)	0.56 (14.2)	1.42 (36.1)	0.59 (15.0)	5600 (385)	2800 (192)
1/2	-TFB-MN8-FN8	1.56 (39.6)	1.00 (25.4)	0.47 (11.9)	0.75 (19.1)	1.56 (39.6)	0.78 (19.8)	5600 (385)	2800 (192)
3/4	-TFB-MN12-FN12	1.67 (42.4)	1.25 (31.8)	0.62 (15.7)	0.75 (19.1)	1.92 (48.8)	0.81 (20.6)	5100 (351)	2500 (172)
1	-TFB-MN16-FN16	1.94 (49.3)	1.69 (42.9)	0.88 (22.4)	0.94 (23.9)	1.91 (48.5)	1.00 (25.4)	5300 (365)	2600 (179)

ISO Tapered Threads									
P-RT Size	Basic Ordering Number	Dimension,in(mm)						Working Pressure psig(bar)	
		L	F (Flat)	B	E	Lx	Bx	316SS, Steel	Brass
1/16	-TFB-MR1-FR1	0.72 (18.3)	0.44 (11.1)	0.12 (3.0)	0.38 (9.7)	0.86 (21.8)	0.39 (9.9)	9200 (633)	4600 (316)
1/8	-TFB-MR2-FR2	0.87 (22.1)	0.50 (12.7)	0.19 (4.8)	0.38 (9.7)	1.04 (26.4)	0.41 (10.4)	6200 (427)	3100 (213)
1/4	-TFB-MR4-FR4	1.17 (29.7)	0.69 (17.5)	0.28 (7.1)	0.56 (14.2)	1.17 (29.7)	0.59 (15.0)	7200 (496)	3600 (248)
3/8	-TFB-MR6-FR6	1.26 (32.0)	0.81 (20.6)	0.38 (9.6)	0.56 (14.2)	1.42 (36.1)	0.59 (15.0)	5600 (385)	2800 (192)
1/2	-TFB-MR8-FR8	1.56 (39.6)	1.00 (25.4)	0.47 (11.9)	0.75 (19.1)	1.56 (39.6)	0.78 (19.8)	5600 (385)	2800 (192)
3/4	-TFB-MR12-FR12	1.67 (42.4)	1.25 (31.8)	0.62 (15.7)	0.75 (19.1)	1.92 (48.8)	0.81 (20.6)	5100 (351)	2500 (172)
1	-TFB-MR16-FR16	1.94 (49.3)	1.69 (42.9)	0.88 (22.4)	0.94 (23.9)	1.91 (48.5)	1.00 (25.4)	5300 (365)	2600 (179)

Female Run Tees

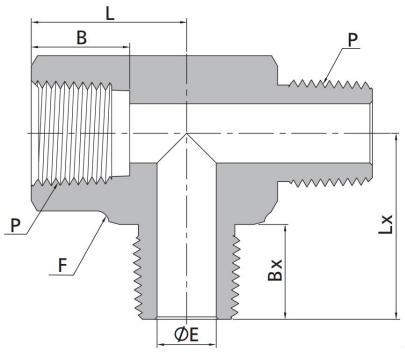

NPT Threads									
P-NPT Size	Basic Ordering Number	Dimension,in(mm)						Working Pressure psig(bar)	
		L	F (Flat)	B	E	Lx	Bx	316SS, Steel	Brass
1/16	-TFR-MN1-FN1	0.86(21.8)	0.44 (11.1)	0.12 (3.0)	0.38 (9.7)	0.86 (21.8)	0.39 (9.9)	9200 (633)	4600 (316)
1/8	-TFR-MN2-FN2	1.04 (26.4)	0.50 (12.7)	0.19 (4.8)	0.41 (10.4)	0.87 (22.1)	0.38 (9.7)	6200 (427)	3100 (213)
1/4	-TFR-MN4-FN4	1.17 (29.7)	0.69 (17.5)	0.28 (7.1)	0.59 (15.0)	1.17 (29.7)	0.56 (14.2)	7200 (496)	3600 (248)
3/8	-TFR-MN6-FN6	1.42 (36.1)	0.81 (20.6)	0.38 (9.6)	0.59 (15.0)	1.26 (32.0)	0.56 (14.2)	5600 (385)	2800 (192)
1/2	-TFR-MN8-FN8	1.56 (39.6)	1.00 (25.4)	0.47 (11.9)	0.78 (19.8)	1.56 (39.6)	0.75 (19.1)	5600 (385)	2800 (192)
3/4	-TFR-MN12-FN12	1.92 (48.8)	1.25 (31.8)	0.62 (15.7)	0.81 (20.6)	1.67 (42.4)	0.75 (19.1)	5100 (351)	2500 (172)
1	-TFR-MN16-FN16	1.91 (48.5)	1.69 (42.9)	0.88 (22.4)	1.00 (25.4)	1.94 (49.3)	0.94 (23.9)	5300 (365)	2600 (179)

ISO Tapered Threads									
P-RT Size	Basic Ordering Number	Dimension,in(mm)						Working Pressure psig(bar)	
		L	F (Flat)	B	E	Lx	Bx	316SS, Steel	Brass
1/16	-TFR-MR1-FR1	0.86(21.8)	0.44 (11.1)	0.12 (3.0)	0.38 (9.7)	0.86 (21.8)	0.39 (9.9)	9200 (633)	4600 (316)
1/8	-TFR-MR2-FR2	1.04 (26.4)	0.50 (12.7)	0.19 (4.8)	0.41 (10.4)	0.87 (22.1)	0.38 (9.7)	6200 (427)	3100 (213)
1/4	-TFR-MR4-FR4	1.17 (29.7)	0.69 (17.5)	0.28 (7.1)	0.59 (15.0)	1.17 (29.7)	0.56 (14.2)	7200 (496)	3600 (248)
3/8	-TFR-MR6-FR6	1.42 (36.1)	0.81 (20.6)	0.38 (9.6)	0.59 (15.0)	1.26 (32.0)	0.56 (14.2)	5600 (385)	2800 (192)
1/2	-TFR-MR8-FR8	1.56 (39.6)	1.00 (25.4)	0.47 (11.9)	0.78 (19.8)	1.56 (39.6)	0.75 (19.1)	5600 (385)	2800 (192)
3/4	-TFR-MR12-FR12	1.92 (48.8)	1.25 (31.8)	0.62 (15.7)	0.81 (20.6)	1.67 (42.4)	0.75 (19.1)	5100 (351)	2500 (172)
1	-TFR-MR16-FR16	1.91 (48.5)	1.69 (42.9)	0.88 (22.4)	1.00 (25.4)	1.94 (49.3)	0.94 (23.9)	5300 (365)	2600 (179)

Male Street Tees

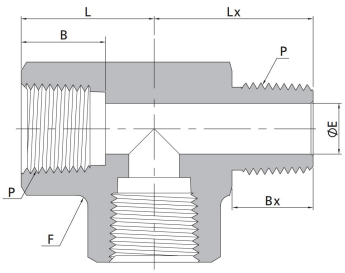

NPT Threads									
P-NPT Size	Basic Ordering Number	Dimension,in(mm)						Working Pressure psig(bar)	
		L	F (Flat)	B	E	Lx	Bx	316SS, Steel	Brass
1/16	-TMS-FN1-MN1	0.86(21.8)	0.44 (11.1)	0.12 (3.0)	0.38 (9.7)	0.86 (21.8)	0.39 (9.9)	9200 (633)	4600 (316)
1/8	-TMS-FN2-MN2	1.04 (26.4)	0.50 (12.7)	0.19 (4.8)	0.41 (10.4)	0.87 (22.1)	0.38 (9.7)	6200 (427)	3100 (213)
1/4	-TMS-FN4-MN4	1.17 (29.7)	0.69 (17.5)	0.28 (7.1)	0.59 (15.0)	1.17 (29.7)	0.56 (14.2)	7200 (496)	3600 (248)
3/8	-TMS-FN6-MN6	1.42 (36.1)	0.81 (20.6)	0.38 (9.6)	0.59 (15.0)	1.26 (32.0)	0.56 (14.2)	5600 (385)	2800 (192)
1/2	-TMS-FN8-MN8	1.56 (39.6)	1.00 (25.4)	0.47 (11.9)	0.78 (19.8)	1.56 (39.6)	0.75 (19.1)	5600 (385)	2800 (192)
3/4	-TMS-FN12-MN12	1.92 (48.8)	1.25 (31.8)	0.62 (15.7)	0.81 (20.6)	1.67 (42.4)	0.75 (19.1)	5100 (351)	2500 (172)
1	-TMS-FN16-MN16	1.91 (48.5)	1.69 (42.9)	0.88 (22.4)	1.00 (25.4)	1.94 (49.3)	0.94 (23.9)	5300 (365)	2600 (179)

ISO Tapered Threads									
P-RT Size	Basic Ordering Number	Dimension,in(mm)						Working Pressure psig(bar)	
		L	F (Flat)	B	E	Lx	Bx	316SS, Steel	Brass
1/16	-TMS-FR1-MR1	0.86(21.8)	0.44 (11.1)	0.12 (3.0)	0.38 (9.7)	0.86 (21.8)	0.39 (9.9)	9200 (633)	4600 (316)
1/8	-TMS-FR2-MR2	1.04 (26.4)	0.50 (12.7)	0.19 (4.8)	0.41 (10.4)	0.87 (22.1)	0.38 (9.7)	6200 (427)	3100 (213)
1/4	-TMS-FR4-MR4	1.17 (29.7)	0.69 (17.5)	0.28 (7.1)	0.59 (15.0)	1.17 (29.7)	0.56 (14.2)	7200 (496)	3600 (248)
3/8	-TMS-FR6-MR6	1.42 (36.1)	0.81 (20.6)	0.38 (9.6)	0.59 (15.0)	1.26 (32.0)	0.56 (14.2)	5600 (385)	2800 (192)
1/2	-TMS-FR8-MR8	1.56 (39.6)	1.00 (25.4)	0.47 (11.9)	0.78 (19.8)	1.56 (39.6)	0.75 (19.1)	5600 (385)	2800 (192)
3/4	-TMS-FR12-MR12	1.92 (48.8)	1.25 (31.8)	0.62 (15.7)	0.81 (20.6)	1.67 (42.4)	0.75 (19.1)	5100 (351)	2500 (172)
1	-TMS-FR16-MR16	1.91 (48.5)	1.69 (42.9)	0.88 (22.4)	1.00 (25.4)	1.94 (49.3)	0.94 (23.9)	5300 (365)	2600 (179)

Male Brunch Tees

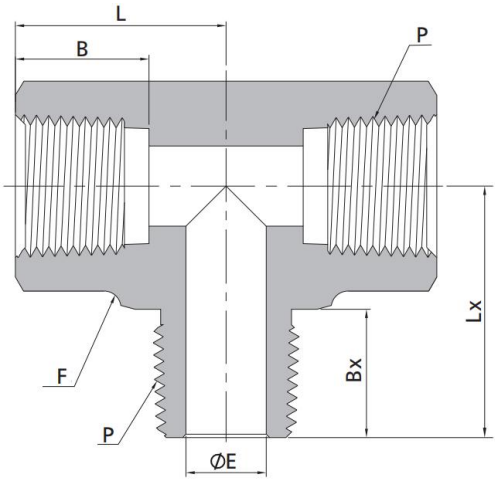

NPT Threads									
P-NPT Size	Basic Ordering Number	Dimension,in(mm)						Working Pressure psig(bar)	
		L	F (Flat)	B	E	Lx	Bx	316SS, Steel	Brass
1/16	-TMB-FN1-MN1	0.86(21.8)	0.44 (11.1)	0.12 (3.0)	0.38 (9.7)	0.86 (21.8)	0.39 (9.9)	9200 (633)	4600 (316)
1/8	-TMB-FN2-MN2	1.04 (26.4)	0.50 (12.7)	0.19 (4.8)	0.41 (10.4)	0.87 (22.1)	0.38 (9.7)	6200 (427)	3100 (213)
1/4	-TMB-FN4-MN4	1.17 (29.7)	0.69 (17.5)	0.28 (7.1)	0.59 (15.0)	1.17 (29.7)	0.56 (14.2)	7200 (496)	3600 (248)
3/8	-TMB-FN6-MN6	1.42 (36.1)	0.81 (20.6)	0.38 (9.6)	0.59 (15.0)	1.26 (32.0)	0.56 (14.2)	5600 (385)	2800 (192)
1/2	-TMB-FN8-MN8	1.56 (39.6)	1.00 (25.4)	0.47 (11.9)	0.78 (19.8)	1.56 (39.6)	0.75 (19.1)	5600 (385)	2800 (192)
3/4	-TMB-FN12-MN12	1.92 (48.8)	1.25 (31.8)	0.62 (15.7)	0.81 (20.6)	1.67 (42.4)	0.75 (19.1)	5100 (351)	2500 (172)
1	-TMB-FN16-MN16	1.91 (48.5)	1.69 (42.9)	0.88 (22.4)	1.00 (25.4)	1.94 (49.3)	0.94 (23.9)	5300 (365)	2600 (179)

ISO Tapered Threads									
P-RT Size	Basic Ordering Number	Dimension,in(mm)						Working Pressure psig(bar)	
		L	F (Flat)	B	E	Lx	Bx	316SS, Steel	Brass
1/16	-TMB-FR1-MR1	0.86(21.8)	0.44 (11.1)	0.12 (3.0)	0.38 (9.7)	0.86 (21.8)	0.39 (9.9)	9200 (633)	4600 (316)
1/8	-TMB-FR2-MR2	1.04 (26.4)	0.50 (12.7)	0.19 (4.8)	0.41 (10.4)	0.87 (22.1)	0.38 (9.7)	6200 (427)	3100 (213)
1/4	-TMB-FR4-MR4	1.17 (29.7)	0.69 (17.5)	0.28 (7.1)	0.59 (15.0)	1.17 (29.7)	0.56 (14.2)	7200 (496)	3600 (248)
3/8	-TMB-FR6-MR6	1.42 (36.1)	0.81 (20.6)	0.38 (9.6)	0.59 (15.0)	1.26 (32.0)	0.56 (14.2)	5600 (385)	2800 (192)
1/2	-TMB-FR8-MR8	1.56 (39.6)	1.00 (25.4)	0.47 (11.9)	0.78 (19.8)	1.56 (39.6)	0.75 (19.1)	5600 (385)	2800 (192)
3/4	-TMB-FR12-MR12	1.92 (48.8)	1.25 (31.8)	0.62 (15.7)	0.81 (20.6)	1.67 (42.4)	0.75 (19.1)	5100 (351)	2500 (172)
1	-TMB-FR16-MR16	1.91 (48.5)	1.69 (42.9)	0.88 (22.4)	1.00 (25.4)	1.94 (49.3)	0.94 (23.9)	5300 (365)	2600 (179)

Female Tees

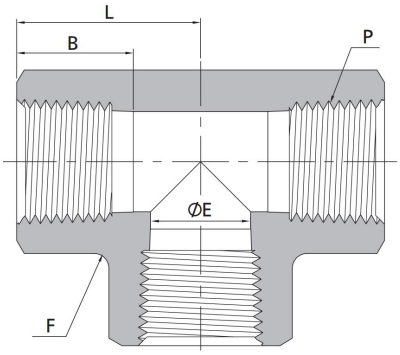

Female NPT Threads							
P-NPT Size	Basic Ordering Number	Dimension,in(mm)				Working Pressure psig(bar)	
		L	F (Flat)	B	E	316SS, Steel	Brass
1/16	-TFT-FN1	0.86 (21.8)	0.44(11.1)	0.39 (9.9)	0.19(4.8)	6700 (460)	3300 (227)
1/8	-TFT-FN2	1.04 (26.4)	0.50 (12.7)	0.41 (10.4)	0.34 (8.6)	6200 (427)	3100 (213)
1/4	-TFT-FN4	1.17(29.7)	0.69 (17.5)	0.59 (15.0)	0.45 (11.4)	7200 (496)	3600 (248)
3/8	-TFT-FN6	1.42 (36.1)	0.81 (20.6)	0.59(15.0)	0.59 (15.0)	5600 (385)	2800 (192)
1/2	-TFT-FN8	1.56 (39.6)	1.00 (25.4)	0.78 (19.8)	0.73 (18.5)	5600 (385)	2800 (192)
3/4	-TFT-FN12	1.92 (48.8)	1.25 (31.8)	0.81 (20.6)	0.94 (23.9)	5100 (351)	2500 (172)
1	-TFT-FN16	1.91 (48.5)	1.69(42.9)	1.00 (25.4)	1.17(29.7)	6400 (440)	3200 (220)
1 1/4	-TFT-FN20	2.35 (59.8)	2.00 (50.8)	1.00(25.4)	1.46 (37.2)	3100 (213)	1600 (110)
1 1/2	-TFT-FN24	2.56 (65.0)	2.50 (63.5)	1.09 (27.7)	1.70(43.3)	5100 (351)	2500 (172)
Heavy-Wall Female NPT Threads							
1/16	-TFT-FN1-10K	1.04 (26.4)	0.50 (12.7)	0.39 (9.9)	0.19(4.8)	10000 (689)	-
1/8	-TFT-FN2-10K	1.17(29.7)	0.69 (17.5)	0.41 (10.4)	0.34 (8.6)	10000 (689)	-
1/4	-TFT-FN4-10K	1.56 (39.6)	1.00 (25.4)	0.59(15.0)	0.45 (11.4)	10000 (689)	-
3/8	-TFT-FN6-10K	1.56 (39.6)	1.00 (25.4)	0.59(15.0)	0.59 (15.0)	10000 (689)	-
1/2	-TFT-FN8-10K	1.97 (50.0)	1.69(42.9)	0.78 (19.8)	0.73 (18.5)	10000 (689)	-
3/4	-TFT-FN12-10K	1.91 (48.5)	1.69(42.9)	0.81 (20.6)	0.94 (23.9)	10000 (689)	-
1	-TFT-FN16-10K	2.35 (59.8)	2.00 (50.8)	1.00 (25.4)	1.17(29.7)	10000 (689)	-
Female ISO Tapered Threads							
P-RT Size	Basic Ordering Number	Dimension,in(mm)				Working Pressure psig(bar)	
		L	F (Flat)	B	E	316SS, Steel	Brass
1/16	-TFT-FR1	0.86 (21.8)	0.44(11.1)	0.39 (9.9)	0.19(4.8)	6700 (460)	3300 (227)
1/8	-TFT-FR2	1.04 (26.4)	0.50 (12.7)	0.41 (10.4)	0.34 (8.6)	6200 (427)	3100 (213)
1/4	-TFT-FR4	1.17(29.7)	0.69 (17.5)	0.59 (15.0)	0.45 (11.4)	7200 (496)	3600 (248)
3/8	-TFT-FR6	1.42 (36.1)	0.81 (20.6)	0.59(15.0)	0.59 (15.0)	5600 (385)	2800 (192)
1/2	-TFT-FR8	1.56 (39.6)	1.00 (25.4)	0.78 (19.8)	0.73 (18.5)	5600 (385)	2800 (192)
3/4	-TFT-FR12	1.92 (48.8)	1.25 (31.8)	0.81 (20.6)	0.94 (23.9)	5100 (351)	2500 (172)
1	-TFT-FR16	1.91 (48.5)	1.69(42.9)	1.00 (25.4)	1.17(29.7)	6400 (440)	3200 (220)
1 1/4	-TFT-FR20	2.35 (59.8)	2.00 (50.8)	1.00(25.4)	1.46 (37.2)	3100 (213)	1600 (110)
1 1/2	-TFT-FR24	2.56 (65.0)	2.50 (63.5)	1.09 (27.7)	1.70(43.3)	5100 (351)	2500 (172)

Female Crosses

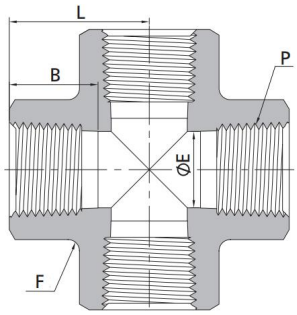

Female NPT Threads

P-NPT Size	Basic Ordering Number	Dimension,in(mm)				Working Pressure psig(bar)	
		L	F (Flat)	B	E	316SS, Steel	Brass
1/16	-TFC-FN1	0.86 (21.8)	0.44(11.1)	0.39 (9.9)	0.19(4.8)	6700 (460)	3300 (227)
1/8	-TFC-FN2	1.04 (26.4)	0.50 (12.7)	0.41 (10.4)	0.34 (8.6)	6200 (427)	3100 (213)
1/4	-TFC-FN4	1.17(29.7)	0.69 (17.5)	0.59 (15.0)	0.45 (11.4)	7200 (496)	3600 (248)
3/8	-TFC-FN6	1.42 (36.1)	0.81 (20.6)	0.59(15.0)	0.59 (15.0)	5600 (385)	2800 (192)
1/2	-TFC-FN8	1.56 (39.6)	1.00 (25.4)	0.78 (19.8)	0.73 (18.5)	5600 (385)	2800 (192)
3/4	-TFC-FN12	1.92 (48.8)	1.25 (31.8)	0.81 (20.6)	0.94 (23.9)	5100 (351)	2500 (172)
1	-TFC-FN16	1.91 (48.5)	1.69(42.9)	1.00 (25.4)	1.17(29.7)	6400 (440)	3200 (220)
1 1/4	-TFC-FN20	2.35 (59.8)	2.00 (50.8)	1.00(25.4)	1.46 (37.2)	3100 (213)	1600 (110)
1 1/2	-TFC-FN24	2.56 (65.0)	2.50 (63.5)	1.09 (27.7)	1.70(43.3)	5100 (351)	2500 (172)

Female ISO Tapered Threads

P-RT Size	Basic Ordering Number	Dimension,in(mm)				Working Pressure psig(bar)	
		L	F (Flat)	B	E	316SS, Steel	Brass
1/16	-TFC-FR1	0.86 (21.8)	0.44(11.1)	0.39 (9.9)	0.19(4.8)	6700 (460)	3300 (227)
1/8	-TFC-FR2	1.04 (26.4)	0.50 (12.7)	0.41 (10.4)	0.34 (8.6)	6200 (427)	3100 (213)
1/4	-TFC-FR4	1.17(29.7)	0.69 (17.5)	0.59 (15.0)	0.45 (11.4)	7200 (496)	3600 (248)
3/8	-TFC-FR6	1.42 (36.1)	0.81 (20.6)	0.59(15.0)	0.59 (15.0)	5600 (385)	2800 (192)
1/2	-TFC-FR8	1.56 (39.6)	1.00 (25.4)	0.78 (19.8)	0.73 (18.5)	5600 (385)	2800 (192)
3/4	-TFC-FR12	1.92 (48.8)	1.25 (31.8)	0.81 (20.6)	0.94 (23.9)	5100 (351)	2500 (172)
1	-TFC-FR16	1.91 (48.5)	1.69(42.9)	1.00 (25.4)	1.17(29.7)	6400 (440)	3200 (220)
1 1/4	-TFC-FR20	2.35 (59.8)	2.00 (50.8)	1.00(25.4)	1.46 (37.2)	3100 (213)	1600 (110)
1 1/2	-TFC-FR24	2.56 (65.0)	2.50 (63.5)	1.09 (27.7)	1.70(43.3)	5100 (351)	2500 (172)

Pipe Caps

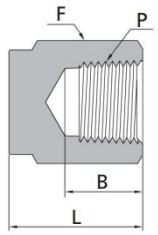

Male NPT Threads

P-NPT Size	Basic Ordering Number	Dimension,in(mm)		
		L	F (Hex)	B
1/16	-TPC-FN1	0.50 (12.7)	0.44 (11.1)	0.39 (9.9)
1/8	-TPC-FN2	0.75 (19.1)	0.56 (14.3)	0.41 (10.4)
1/4	-TPC-FN4	0.91 (23.1)	0.75 (19.1)	0.59 (15.0)
3/8	-TPC-FN6	1.03 (26.2)	0.87 (22.2)	0.59 (15.0)
1/2	-TPC-FN8	1.34 (34.0)	1.06 (27.0)	0.78 (19.8)
3/4	-TPC-FN12	1.44 (36.6)	1.31 (33.3)	0.81 (20.6)
1	-TPC-FN16	1.62 (41.1)	1.63 (41.3)	1.00 (25.4)

Male ISO Parallel Threads

P-RT Size	Basic Ordering Number	Dimension,in(mm)		
		L	F (Hex)	B
1/16	-TPC-FR1	0.50 (12.7)	0.44 (11.1)	0.39 (9.9)
1/8	-TPC-FR2	0.75 (19.1)	0.56 (14.3)	0.41 (10.4)
1/4	-TPC-FR4	0.91 (23.1)	0.75 (19.1)	0.59 (15.0)
3/8	-TPC-FR6	1.03 (26.2)	0.87 (22.2)	0.59 (15.0)
1/2	-TPC-FR8	1.34 (34.0)	1.06 (27.0)	0.78 (19.8)
3/4	-TPC-FR12	1.44 (36.6)	1.31 (33.3)	0.81 (20.6)
1	-TPC-FR16	1.62 (41.1)	1.63 (41.3)	1.00 (25.4)

Pipe Plugs

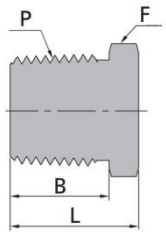

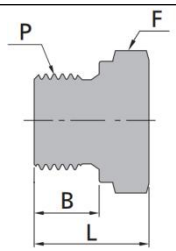

Male NPT Threads

P-NPT Size	Basic Ordering Number	Dimension,in(mm)		
		L	F (Hex)	B
1/16	-TPP-MN1	0.56 (14.2)	0.31 (7.9)	038 (9.7)
1/8	-TPP-MN2	0.56 (14.2)	0.44 (11.1)	038 (9.7)
1/4	-TPP-MN4	0.75 (19.1)	0.56 (14.3)	0.56 (14.2)
3/8	-TPP-MN6	0.78 (19.8)	0.69 (17.5)	0.56 (14.2)
1/2	-TPP-MN8	0.97 (24.6)	0.87 (22.2)	0.75 (19.1)
3/4	-TPP-MN12	1.21 (30.7)	1.06 (27.0)	0.75 (19,1)
1	-TPP-MN16	1.50 (38.1)	1.37 (34.9)	0.94 (23.9)
1 1/4	-TPP-MN20	1-51(38.4)	1.75 (44.5)	0.94 (23.9)
1 1/2	-TPP-MN24	1.72 (43.7)	2.00 (50.8)	1.03 (26.2)

Male ISO Parallel Threads

P-RS Size	Basic Ordering Number	Dimension,in(mm)		
		L	F (Hex)	B
1/8	-TPP-RS2	0.55 (14.0)	0.56 (143)	0.28 (7.1)
1/4	-TPP-RS4	0.78 (19.8)	0.75 (19.1)	0.44 (11.2)
3/8	-TPP-RS6	0.78 (19.8)	0.87 (22.2)	0.44 (11.2)
1/2	-TPP-RS8	0.99 (25.1)	1.06 (27.0)	0.55 (14.0)
3/4	-TPP-RS12	1.13 (28.7)	1.31 (333)	0.62 (15.7)
1	-TPP-RS16	1.21 (30.7)	1.63 (41.3)	0.71 (18.0)

Male ISO Tapered Threads

P-RT Size	Basic Ordering Number	Dimension,in(mm)		
		L	F (Hex)	B
1/16	-TPP-MR1	0.56 (14.2)	0.31 (7.9)	038 (9.7)
1/8	-TPP-MR2	0.56 (14.2)	0.44 (11.1)	038 (9.7)
1/4	-TPP-MR4	0.75 (19.1)	0.56 (14.3)	0.56 (14.2)
3/8	-TPP-MR6	0.78 (19.8)	0.69 (17.5)	0.56 (14.2)
1/2	-TPP-MR8	0.97 (24.6)	0.87 (22.2)	0.75 (19.1)
3/4	-TPP-MR12	1.21 (30.7)	1.06 (27.0)	0.75 (19,1)
1	-TPP-MR16	1.50 (38.1)	1.37 (34.9)	0.94 (23.9)
1 1/4	-TPP-MR20	1-51(38.4)	1.75 (44.5)	0.94 (23.9)
1 1/2	-TPP-MR24	1.72 (43.7)	2.00 (50.8)	1.03 (26.2)
2	-TPP-MR32	2.00 (50.8)	2.75 (69.9)	1.03 (26.2)

Male Metric Threads

P-Metric Size	Basic Ordering Number	Dimension,in(mm)		
		L	F (Hex)	B
M14x 1.5	-TPP-M14	21.0 (0.83)	20.6 (0.81)	12.0 (0.47)
M16 x 1.5	-TPP-M16	23.0 (0.91)	22.2 (0.87)	12.0 (0.47)
M18 x 1.5	-TPP-M18	25.0 (0.98)	23.8 (0.94)	12.0 (0.47)
M20 x 1.5	-TPP-M20	26.5 (1.04)	25.4 (1.00)	14.0 (0.55)
M22 x 1.5	-TPP-M22	28.8 (1.13)	28.6 (1.13)	14.0 (0.55)
M24x 1.5	-TPP-M24	29.0 (1.14)	35.0 (1.38)	14.0 (0.55)
M27 x2	-TPP-M27	30.0 (1.18)	36.5 (1.44)	16.0 (0.63)

Hollow Hex Plugs

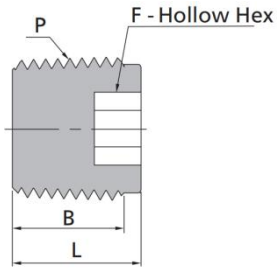

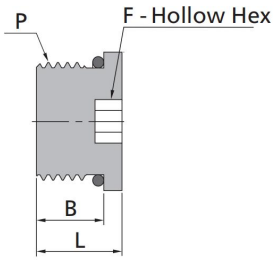

Male NPT Threads

P-NPT Size	Basic Ordering Number	Dimension,in(mm)		
		L	F	B
1/16	-THP-MN1	0.30 (7.6)	0.16 (4.0)	0.29 (7.4)
1/8	-THP-MN2	0.41 (10.4)	0.19 (4.8)	0.29 (7.4)
1/4	-THP-MN4	0.61 (15.5)	0.25 (6.4)	0.49 (12.4)
3/8	-THP-MN6	0.59(15.0)	0.31 (7.9)	0.47 (11.9)
1/2	-THP-MN8	0.76(19.3)	0.37 (9.5)	0.64 (16.2)
3/4	-THP-MN12	0.78(19.8)	0.56 (14.3)	0.66 (16.7)
1	-THP-MN16	0.82 (20.8)	0.63 (15.9)	0.70 (17.7)

Male ISO Parallel Threads

P-SAE/MS Size	Basic Ordering Number	Dimension,in(mm)		
		L	F	B
7/16-20	-THP-S7	0.45 (11.4)	0.19 (4.8)	0.36 (9.1)
9/16-18	-THP-S9	0.48(12.2)	0.25 (6.4)	0.39 (9.9)
3/4-16	-THP-S12	0.56(14.2)	0.31 (7.9)	0.44(11.2)
1 1/16-12	-THP-S17	0.75(19.1)	0.56 (14.3)	0.59 (15.0)
1 5/16-12	-THP-S21	0.75(19.1)	0.63 (15.9)	0.59 (15.0)

Ball Valves

Contents

Part NO. Discription

For Example: SS-OIB-MN4-FN4-5-A

Material	Series	Inlet or Outlet	Size	Orifice	Type
SS: Stainles Steel 316	OIB Series	FN: Female Npt	2: 1/8″	2: 2.4mm	A: ANgle
S9: Stainles Steel 904L	HBB Series	MN: Male Npt	3: 3/16″ or 3mm	3: 3.2mm	3W: 3-way
S4: Stainles Steel 304	HPB Series	FR: Female BSPT	4: 1/4″	4: 4.2mm	
S2: Stainles Steel 321	TB Series	MR: Male BSPT	5: 5/16″	5: 4.8mm	
M4: Monle 400	TBH Series	FT: Franctional Tube	6: 3/8″ or 6mm	7: 7.1mm	
I6: Inconle 625		MT: Metric Tube	8: 1/2″ 0r 8mm	9: 8.9mm	
HC: Hastelly C 276		BW: Butt Weld	10: 5/8″ or 10mm	9h: 9.5mm	
B: Brass		SW: Socket Weld	12: 3/4″ or 12mm	10: 10.3mm	
			16: 1″ or 16mm	16: 16mm	

One-piece Instrumentation Ball Valves

OIB Series

Features

- One-piece body and one-piece ball stem
- No dead zone, such as area between the ball and valve chamber
- Full operating pressure at any port
- Leak-tight performance testing for every valve at the maximum working pressure with nitrogen
- In-line inspection and repair after system relieved by top entry design
- Maximum working pressure: 3000 psig (207 bar)
- Working temperature: -65°F to 300°F (-54°C to 148°C)

Standard Materials of Construction

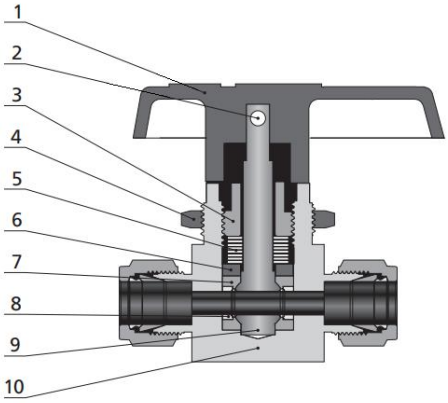

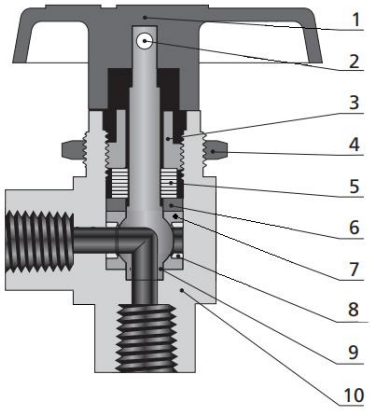

Item	Component	Valve Body Material		
		Stainless Steel	Brass	Alloy 400
		Material Grade/ASTM Specification		
1	Handle	Nylon or Aluminium		
2	Set Screw	S17400 SS/A564		
3	Packing Bolt	Powdered metal 300 series SS or 316 SS/A276, A479	Brass CDA 36000/B16	Alloy R-405/B164
4	Panel Nut	Powdered metal 300 series SS /B783 or 316 SS/A276, A479	Brass CDA 36000/B16	Powdered metal 300 series SS /B783 or 316 SS/A276, A479
5	Dishing Spring	S17700/A693		
6	Gland	Powdered metal 300 series SS/B783 or 316 SS/A276	Brass CDA 36000/B16	Alloy 400/B164
7	Packing Seat	PTFE/D1710 or UHMWPE/D4020		
8	Support Ring	316 SS/A276	Brass CDA 36000/B16	Alloy 400/B164
9	Ball Stem	316 SS/A276	Brass CDA 36000/B16	Alloy 400/B164
10	Body	316 SS/A182	Brass CDA 37700/B16	Alloy 400/B164

Dimensions OIB Series

Straight

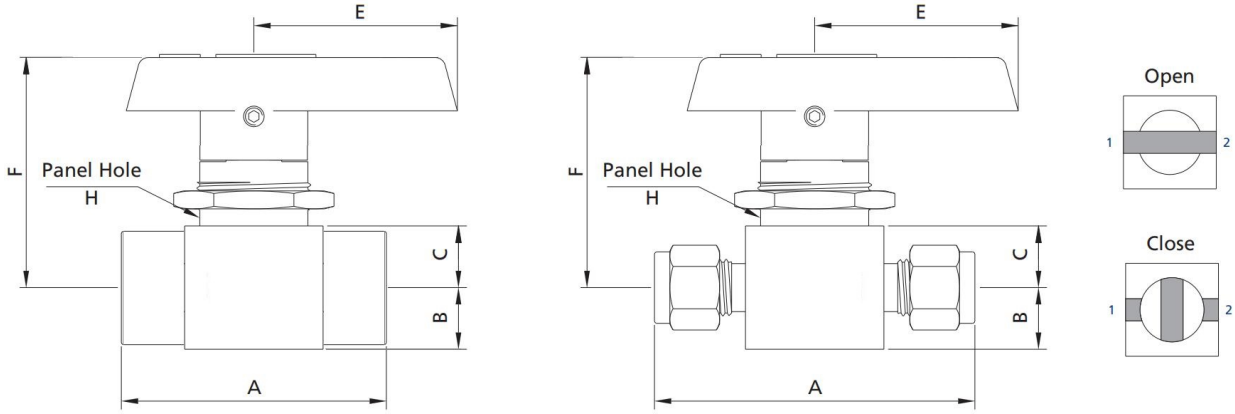

Basic Ordering Number	Connection Type and Size	Orifice in.(mm)	Cv		Dimension, in.(mm)					
			Straight	Angle	A	B	C	E	F	H
-OIB-FN2-3	1/8 Female NPT	0.13 (3.2)	0.50	0.30	1.63 (41.4)	0.28 (7.1)	0.34 (8.6)	1.10 (28.0)	1.43 (36.2)	0.59 (15.0)
-OIB-FN2-5		0.19 (4.8)	0.90	0.70	2.00 (50.8)	0.38 (9.7)	0.44 (11.2)	1.57 (39.9)	1.64 (41.7)	0.78 (19.8)
-OIB-FN4-5	1/4 Female NPT	0.19 (4.8)	0.90	0.75	2.06 (52.3)	0.38 (9.7)	0.44 (11.2)	1.57 (39.9)	1.64 (41.7)	0.78 (19.8)
-OIB-FN4-7		0.28 (7.1)	2.60	1.70	2.50 (63.5)	0.56 (14.2)	0.56 (14.2)	2.05 (52)	2.19 (55.5)	1.13 (28.6)
-OIB-FN6-5	3/8 Female NPT	0.28 (7.1)	2.60	1.50	2.50 (63.5)	0.56 (14.2)	0.56 (14.2)	2.05 (52)	2.19 (55.5)	1.13 (28.6)
-OIB-FN8-10	1/2 Female NPT	0.41 (10.3)	6.30	3.50	3.12 (79.2)	0.69 (17.5)	0.69 (17.5)	3.13 (79.6)	2.67 (67.7)	1.50 (38.1)
-OIB-MN2-3	1/8 Male NPT	0.13 (3.2)	0.50	0.30	1.63 (41.4)	0.28 (7.1)	0.34 (8.6)	1.10 (28.0)	1.43 (36.2)	0.59 (15.0)
-OIB-MN4-5	1/4 Male NPT	0.19 (4.8)	0.90	0.75	2.00 (50.8)	0.38 (9.7)	0.44 (11.2)	1.57 (39.9)	1.64 (41.7)	0.78 (19.8)
-OIB-MN6-5	3/8 Male NPT	0.28 (7.1)	2.60	1.50	2.50 (63.5)	0.56 (14.2)	0.56 (14.2)	2.05 (52)	2.19 (55.5)	1.13 (28.6)
-OIB-MN8-10	1/2 Male NPT	0.41 (10.3)	6.30	3.50	3.12 (79.2)	0.69 (17.5)	0.69 (17.5)	3.13 (79.6)	2.67 (67.7)	1.50 (38.1)
-OIB-FT2-2	1/8″ Tube	0.09 (2.4)	0.20	0.15	2.01 (51.0)	0.28 (7.1)	0.34 (8.6)	1.10 (28.0)	1.43 (36.2)	0.59 (15.0)
-OIB-FT4-5	1/4″ Tube	0.19 (4.8)	1.40	0.90	2.39 (60.7)	0.38 (9.7)	0.44 (11.2)	1.57 (39.9)	1.64 (41.7)	0.78 (19.8)
-OIB-FT6-7	3/8″ Tube	0.28 (7.1)	6.00	2.0	3.05 (77.5)	0.56 (14.2)	0.56 (14.2)	2.05 (52)	2.19 (55.5)	1.13 (28.6)
-OIB-FT8-10	1/2″ Tube	0.41 (10.3)	6.40	3.80	3.92 (99.6)	0.69 (17.5)	0.69 (17.5)	3.13 (79.6)	2.67 (67.7)	1.50 (38.1)
-OIB-FT12-10	3/4″ Tube	0.41 (10.3)	12.0	4.60	3.92 (99.6)	0.69 (17.5)	0.69 (17.5)	3.13 (79.6)	2.67 (67.7)	1.50 (38.1)
-OIB-MT3-2	3mm Tube	0.09 (2.4)	0.20	0.15	2.01 (51.0)	0.28 (7.1)	0.34 (8.6)	1.10 (28.0)	1.43 (36.2)	0.59 (15.0)
-OIB-MT6-5	6mm Tube	0.19 (4.8)	1.40	0.90	2.39 (60.7)	0.38 (9.7)	0.44 (11.2)	1.57 (39.9)	1.64 (41.7)	0.78 (19.8)
-OIB-MT8-5	8mm Tube	0.19 (4.8)	1.40	0.90	2.46 (62.5)	0.38 (9.7)	0.44 (11.2)	1.64 (41.7)	1.64 (41.7)	0.78 (19.8)
-OIB-MT10-7	10mm Tube	0.28 (7.1)	6.00	2.0	3.05 (77.5)	0.56 (14.2)	0.56 (14.2)	2.05 (52)	2.19 (55.5)	1.13 (28.6)
-OIB-MT12-10	12mm Tube	0.41 (10.3)	6.40	3.80	3.92 (99.6)	0.69 (17.5)	0.69 (17.5)	3.13 (79.6)	2.67 (67.7)	1.50 (38.1)
-OIB-MT14-10	14mm Tube	0.41 (10.3)	6.40	3.80	3.92 (99.6)	0.69 (17.5)	0.69 (17.5)	3.13 (79.6)	2.67 (67.7)	1.50 (38.1)
-OIB-MT18-10	18mm Tube	0.41 (10.3)	12.0	4.60	3.92 (99.6)	0.69 (17.5)	0.69 (17.5)	3.13 (79.6)	2.67 (67.7)	1.50 (38.1)

Angle

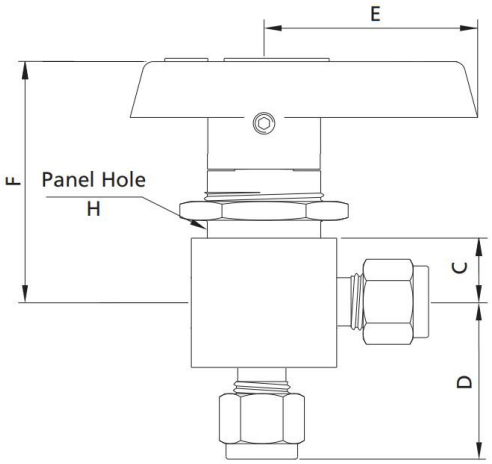

3-way

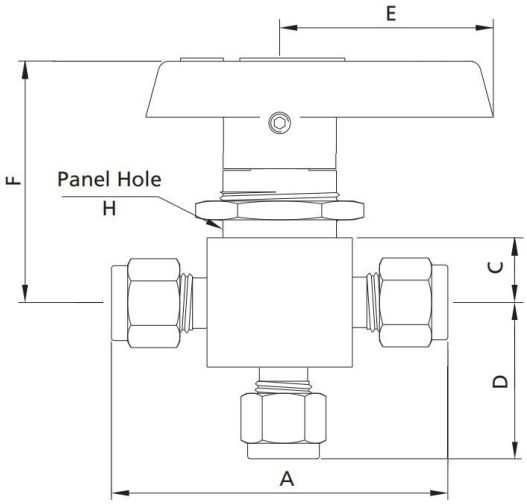

Open

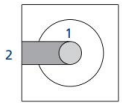

Close

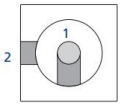

3L Flow Pattern

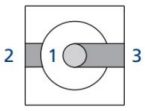

Basic Ordering Number	Connection Type and Size	Orifice in.(mm)	Cv		Dimension, in.(mm)					
			Straight	Angle	A	C	D	E	F	H
-OIB-FN2-3-A	1/8 Female NPT	0.13 (3.2)	0.50	0.30	1.63 (41.4)	0.34 (8.6)	0.81 (20.6)	1.10 (28.0)	1.43 (36.2)	0.59 (15.0)
-OIB-FN2-3-3W										
-OIB-FN2-5-A		0.19 (4.8)	0.90	0.70	2.00 (50.8)	0.44 (11.2)	1.03 (26.2)	1.57 (39.9)	1.64 (41.7)	0.78 (19.8)
-OIB-FN2-5-3W										
-OIB-FN4-5-A	1/4 Female NPT	0.19 (4.8)	0.90	0.75	2.06 (52.3)	0.44 (11.2)	1.03 (26.2)	1.57 (39.9)	1.64 (41.7)	0.78 (19.8)
-OIB-FN5-5-3W										
-OIB-FN4-7-A		0.28 (7.1)	2.60	1.70	2.50 (63.5)	0.56 (14.2)	1.25 (31.8)	2.05 (52)	2.19 (55.5)	1.13 (28.6)
-OIB-FN4-7-3W										
-OIB-FN6-5-A	3/8 Female NPT	0.28 (7.1)	2.60	1.50	2.50 (63.5)	0.56 (14.2)	1.25 (31.8)	2.05 (52)	2.19 (55.5)	1.13 (28.6)
-OIB-FN6-7-3W										
-OIB-FN8-10-A	1/2 Female NPT	0.41 (10.3)	6.30	3.50	3.12 (79.2)	0.69 (17.5)	1.56 (39.6)	3.13 (79.6)	2.67 (67.7)	1.50 (38.1)
-OIB-FN8-10-3W										
-OIB-MN2-3-A	1/8 Male NPT	0.13 (3.2)	0.50	0.30	1.63 (41.4)	0.28 (7.1)	0.34 (8.6)	1.10 (28.0)	1.43 (36.2)	0.59 (15.0)
-OIB-MN2-3-3W										
-OIB-MN4-5-A	1/4 Male NPT	0.19 (4.8)	0.90	0.75	2.00 (50.8)	0.38 (9.7)	0.44 (11.2)	1.57 (39.9)	1.64 (41.7)	0.78 (19.8)
-OIB-MN5-5-3W										
-OIB-MN6-5-A	3/8 Male NPT	0.28 (7.1)	2.60	1.50	2.50 (63.5)	0.56 (14.2)	0.56 (14.2)	2.05 (52)	2.19 (55.5)	1.13 (28.6)
-OIB-MN6-7-3W										
-OIB-MN8-10-A	1/2 Male NPT	0.41 (10.3)	6.30	3.50	3.12 (79.2)	0.69 (17.5)	0.69 (17.5)	3.13 (79.6)	2.67 (67.7)	1.50 (38.1)
-OIB-MN8-10-3W										
-OIB-FT2-2-A	1/8″ Tube	0.09 (2.4)	0.20	0.15	2.01 (51.0)	0.34 (8.6)	0.97 (24.6)	1.10 (28.0)	1.43 (36.2)	0.59 (15.0)
-OIB-FT2-2-3W										
-OIB-FT4-5-A	1/4″ Tube	0.19 (4.8)	1.40	0.90	2.39 (60.7)	0.44 (11.2)	1.29 (32.8)	1.57 (39.9)	1.64 (41.7)	0.78 (19.8)
-OIB-FT4-5-3W										
-OIB-FT6-7-A	3/8″ Tube	0.28 (7.1)	6.00	2.0	3.05 (77.5)	0.56 (14.2)	1.43 (36.3)	2.05 (52)	2.19 (55.5)	1.13 (28.6)
-OIB-FT6-7-3W										
-OIB-FT8-10-A	1/2″ Tube	0.41 (10.3)	6.40	3.80	3.92 (99.6)	0.69 (17.5)	1.74 (44.2)	3.13 (79.6)	2.67 (67.7)	1.50 (38.1)
-OIB-FT8-10-3W										
-OIB-FT12-10-A	3/4″ Tube	0.41 (10.3)	12.0	4.60	3.92 (99.6)	0.69 (17.5)	1.74 (44.2)	3.13 (79.6)	2.67 (67.7)	1.50 (38.1)
-OIB-FT12-10-3W										

Basic Ordering Number	Connection Type and Size	Orifice in.(mm)	Cv		Dimension, in.(mm)					
			Straight	Angle	A	C	D	E	F	H
-OIB-MT3-2	3mm Tube	0.09 (2.4)	0.20	0.15	2.01 (51.0)	0.34 (8.6)	0.97 (24.6)	1.10 (28.0)	1.43 (36.2)	0.59 (15.0)
-OIB-MT3-2-3W										
-OIB-MT6-5	6mm Tube	0.19 (4.8)	1.40	0.90	2.39 (60.7)	0.44 (11.2)	1.29 (32.8)	1.57 (39.9)	1.64 (41.7)	0.78 (19.8)
-OIB-MT6-5-3W										
-OIB-MT8-5	8mm Tube	0.19 (4.8)	1.40	0.90	2.46 (62.5)	0.44 (11.2)	1.29 (32.8)	1.64 (41.7)	1.64 (41.7)	0.78 (19.8)
-OIB-MT8-5-3W										
-OIB-MT10-7	10mm Tube	0.28 (7.1)	6.00	2.0	3.05 (77.5)	0.56 (14.2)	1.43 (36.3)	2.05 (52)	2.19 (55.5)	1.13 (28.6)
-OIB-MT10-7-3W										
-OIB-MT12-10	12mm Tube	0.41 (10.3)	6.40	3.80	3.92 (99.6)	0.69 (17.5)	1.74 (44.2)	3.13 (79.6)	2.67 (67.7)	1.50 (38.1)
-OIB-MT12-10-3W										
-OIB-MT14-10	14mm Tube	0.41 (10.3)	6.40	3.80	3.92 (99.6)	0.69 (17.5)	1.74 (44.2)	3.13 (79.6)	2.67 (67.7)	1.50 (38.1)
-OIB-MT14-10-3W										
-OIB-MT18-10	18mm Tube	0.41 (10.3)	12.0	4.60	3.92 (99.6)	0.69 (17.5)	1.74 (44.2)	3.13 (79.6)	2.67 (67.7)	1.50 (38.1)
-OIB-MT18-10-3W										

1. Sizes and types listed are standard. Other sizes and types are available upon request, refer to the ordering information.
2. Dimensions are shown with nuts finger-tightened. All dimensions are for reference only and are subject to change.
3. For dimensions not shown above, please contact the authorized representative or the company employees.

Pressure vs. Temperature

2-, 3-way, Angle Valves

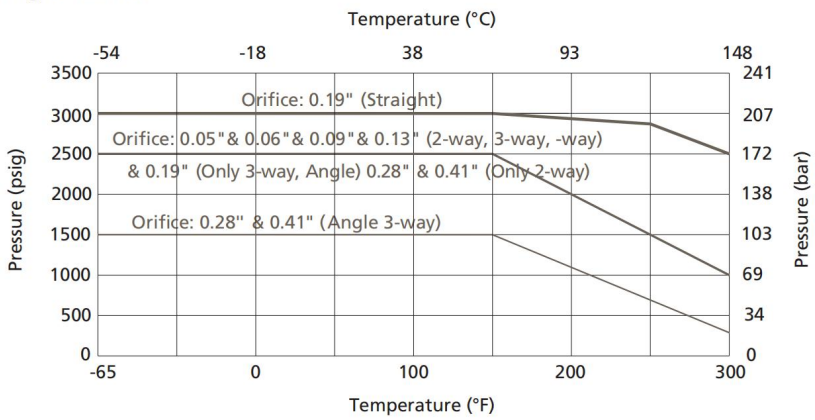

Switching Valves (4, 5, 6 and 7-way)

4, 5-way Valve

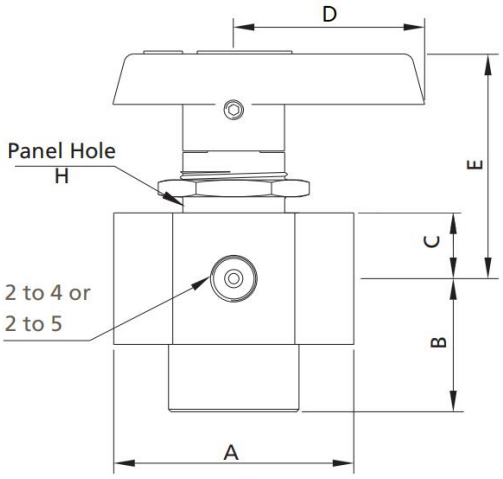

6, 7-way Valve

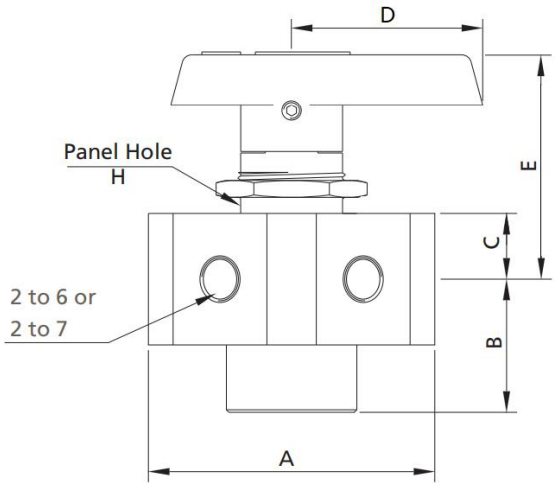

4L Flow Pattern

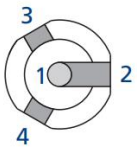

6L Flow Pattern

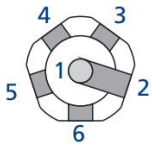

5L Flow Pattern

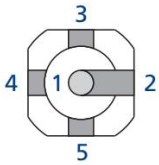

7L Flow Pattern

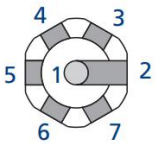

Basic Ordering Number	Connection Type and Size	Orifice in.(mm)	Cv	Dimension, in.(mm)					
				A	B	C	D	E	H
-OIB-FN2-2-4L	1/8 Female NPT	0.06 (1.6)	0.07	1.85 (47.0)	0.88 (22.4)	0.44 (11.2)	1.57 (39.9)	1.76 (44.6)	0.91 (23.1)
-OIB-FN2-2-5L									
-OIB-FN8-10-4L	1/2 Female NPT	0.41 (10.3)	3.50	3.13 (79.5)	1.56 (39.6)	0.69 (17.5)	3.13 (79.6)	2.63 (66.7)	1.50 (38.1)
-OIB-FN8-10-5L									
-OIB-FT2-2-4L	1/8 Tube	0.06 (1.6)	0.07	2.64 (67.0)	1.32 (33.5)	0.44 (11.2)	1.57 (39.9)	1.76 (44.6)	0.91 (23.1)
-OIB-FT2-2-5L									
-OIB-FT2-1-6L	1/16 Tube	0.05 (1.3)	0.05	2.64 (67.0)	1.32 (33.5)	0.44 (11.2)	1.57 (39.9)	1.76 (44.6)	0.91 (23.1)
-OIB-FT2-1-7L									
-OIB-FT2-2-6L	1/8 Tube	0.06 (1.6)	0.07	2.64 (67.0)	1.32 (33.5)	0.44 (11.2)	1.57 (39.9)	1.76 (44.6)	0.91 (23.1)
-OIB-FT2-2-7L									

Pressure vs. Temperature

4-, 5-, 6-, 7-way Valves

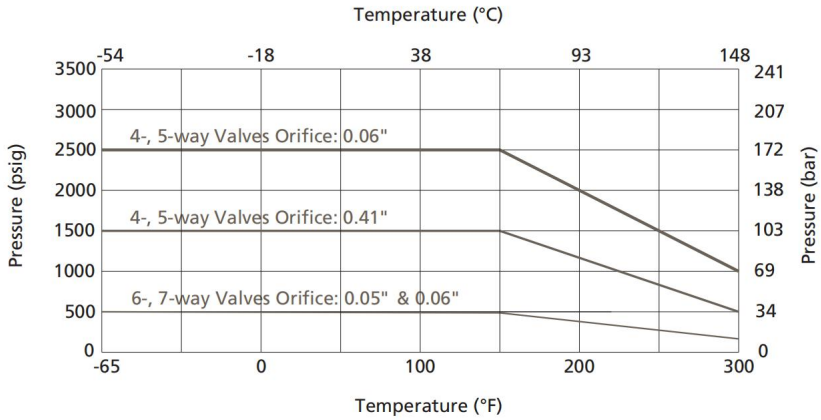

Crossover Valves (4, 6-way)

4-way Valve

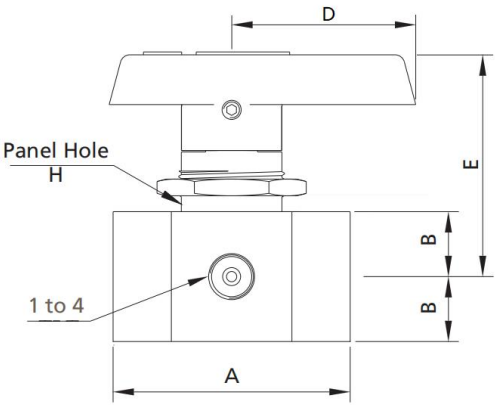

6-way Valve

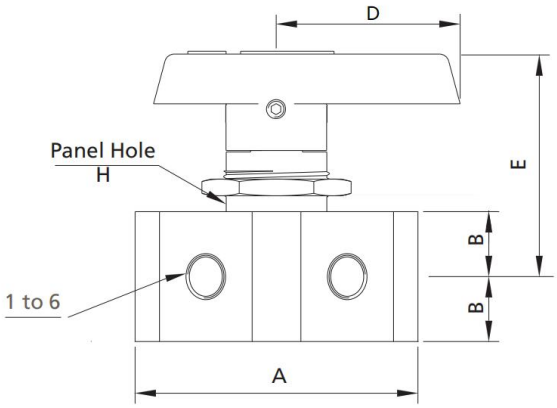

4C Flow Pattern

6C Flow Pattern

Basic Ordering Number	Connection Type and Size	Orifice in.(mm)	Cv	Dimension, in.(mm)				
				A	B	D	E	H
-OIB-FN2-2-4C	1/8 Female NPT	0.06 (1.6)	0.08	1.55 (39.4)	0.44 (11.2)	1.57 (39.9)	1.64 (41.7)	0.78 (19.8)
-OIB-FN8-7-4C	1/2 Female NPT	0.28 (7.1)	1.60	3.13 (79.5)	0.69 (17.5)	3.13 (79.6)	2.67 (67.7)	1.50 (38.1)
-OIB-FT1-1-4C	1/16 Tube	0.05 (1.3)	0.06	1.95 (49.6)	0.44 (11.2)	1.57 (39.9)	1.64 (41.7)	0.78 (19.8)
-OIB-FT2-2-4C	1/8 Tube	0.06 (1.6)	0.08	2.61 (66.3)	0.44 (11.2)	1.57 (39.9)	1.64 (41.7)	0.78 (19.8)
-OIB-FT1-1-6C	1/16 Tube	0.05 (1.3)	0.06	1.95 (49.6)	0.44 (11.2)	1.57 (39.9)	1.64 (41.7)	0.78 (19.8)
-OIB-FT2-2-6C	1/8 Tube	0.06 (1.6)	0.08	1.95 (49.6)	0.44 (11.2)	1.57 (39.9)	1.64 (41.7)	0.78 (19.8)

Pressure vs. Temperature

Crossover (4-, 6-way) Valves

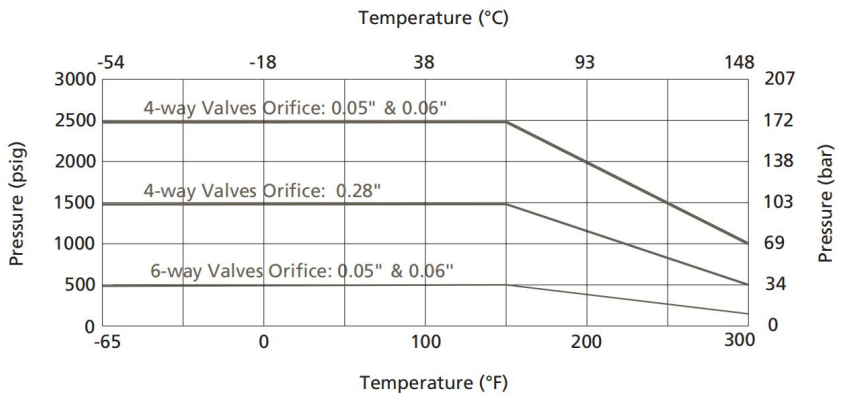

Hex Bar Stock Ball Valves

HBB Series

Features

- Compact and economical design
- Free floating ball design for seat wear compensation
- Bi-directional flow
- Low operating torque
- Any reasonable connections available
- Options for handle color
- Leak-tight performance testing for every valve at the maximum working pressure with nitrogen
- In-line inspection and repair after system relieved by top entry design
- Maximum working pressure: 2000 psig (138 bar)
- Working temperature: -65°F to 300°F (-54°C to 148°C)

Standard Materials of Construction

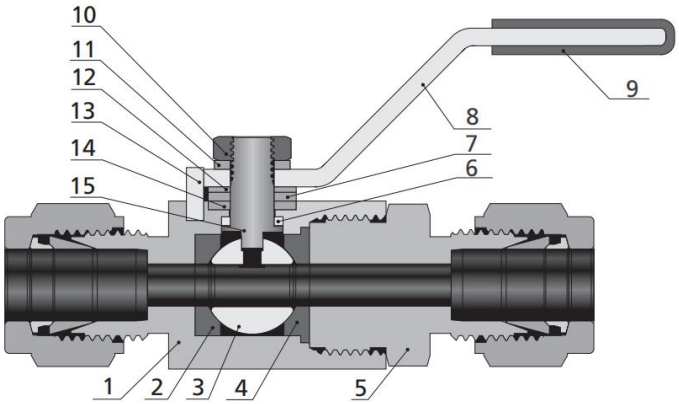

Item	Component	Valve Body Material			
		316 SS	304 SS	316L SS	Brass
1	Body	316 SS/A276	304 SS/A276	316L SS/A276	Brass
2	Front Seat	PTFE/D1710			
3	Ball	316 SS/A276			
4	Back Seat	PTFE/D1710			
5	End Connector	316 SS/A276	304 SS/A276	316L SS/A276	Brass
6	Bottom Packing	PTFE/D1710			
7	Washer	316 SS/A276			
8	Handle	304 SS/A240 or Aluminium			
9	Sleeve	Vinyl			
10	Stem Nut	Stainless steel			
11	Gasket	Stainless steel			
12	Coned-disk Spring	S17700/A693			
13	Pin	Stainless steel			
14	Top Packing	PTFE/D1710			
15	Stem	316 SS/A276			

Dimensions

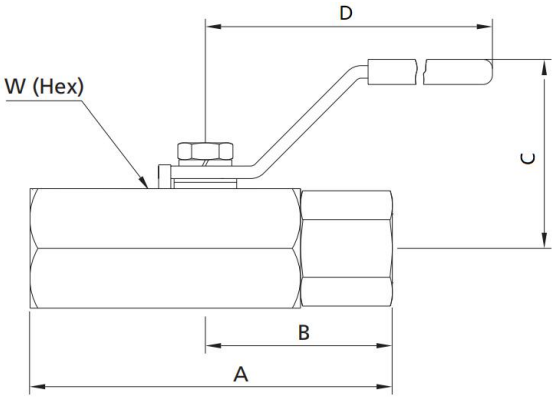

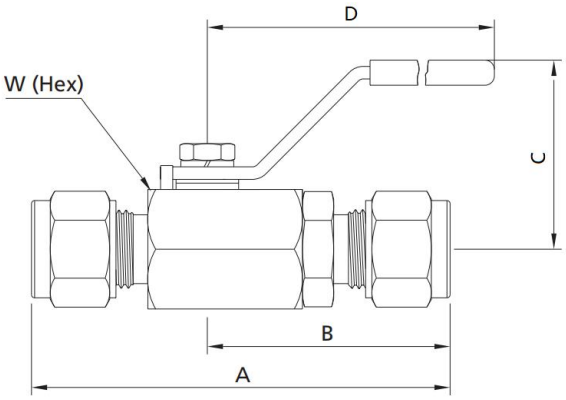

Basic Ordering Number	Connection Type and Size	Orifice in.(mm)	Cv	Dimension, in.(mm)				
				A	B	C	D	W
-HBB-FN2-5	1/8 Female NPT	0.19 (4.8)	1.25	1.85 (47.0)	1.08 (27.4)	2.36 (60.0)	1.18 (30.0)	0.75 (19.1)
-HBB-FN4-5	1/4 Female NPT	0.19 (4.8)	1.25	1.85 (47.0)	1.08 (27.4)	2.36 (60.0)	1.18 (30.0)	0.75 (19.1)
-HBB-FN6-7	3/8 Female NPT	0.28 (7.1)	2.50	2.03 (51.6)	1.18 (30.0)	2.36 (60.0)	1.18 (30.0)	0.87 (22.2)
-HBB-FN8-9	1/2 Female NPT	0.35 (8.9)	6.25	2.08 (53.0)	1.18 (30.0)	3.15 (80.0)	1.54 (39.0)	0.87 (22.2)
-HBB-FN12-12	3/4 Female NPT	0.47 (12.0)	12.65	2.39 (60.7)	1.20 (30.5)	3.94 (100.0)	2.03 (50.7)	1.26 (32.0)
-HBB-FN16-16	1 Female NPT	0.63 (16.0)	17.35	3.00 (76.5)	1.50 (38.1)	3.94 (100.0)	2.15 (54.8)	1.50 (38.1)
-HBB-MN4-5	1/4 Male NPT	0.19 (4.8)	1.25	1.85 (47.0)	1.08 (27.4)	2.36 (60.0)	1.18 (30.0)	0.75 (19.1)
-HBB-MN6-7	3/8 Male NPT	0.28 (7.1)	2.50	2.03 (51.6)	1.18 (30.0)	2.36 (60.0)	1.18 (30.0)	0.87 (22.2)
-HBB-MN8-9	1/2 Male NPT	0.35 (8.9)	6.25	2.08 (53.0)	1.18 (30.0)	3.15 (80.0)	1.54 (39.0)	0.87 (22.2)
-HBB-MN12-12	3/4 Male NPT	0.47 (12.0)	12.65	2.39 (60.7)	1.20 (30.5)	3.94 (100.0)	2.03 (50.7)	1.26 (32.0)
-HBB-MN16-16	1 Male NPT	0.63 (16.0)	17.35	3.00 (76.5)	1.50 (38.1)	3.94 (100.0)	2.15 (54.8)	1.50 (38.1)
-HBB-FT4-5	1/4 Tube	0.19 (4.8)	1.25	2.57 (65.2)	1.50 (38.1)	2.36 (60.0)	1.18 (30.0)	0.75 (19.1)
-HBB-FT6-7	3/8 Tube	0.28 (7.1)	2.50	2.87 (72.9)	1.68 (42.7)	2.36 (60.0)	1.18 (30.0)	0.87 (22.2)
-HBB-FT8-9	1/2 Tube	0.35 (8.9)	6.25	3.15 (80.0)	1.83 (46.5)	3.15 (80.0)	1.54 (39.0)	0.87 (22.2)
-HBB-FT12-12	3/4 Tube	0.47 (12.0)	12.65	3.50 (88.9)	2.00 (50.8)	3.94 (100.0)	2.03 (50.7)	1.26 (32.0)
-HBB-FT16-16	1 Tube	0.63 (16.0)	17.35	4.31 (109.5)	2.42 (61.5)	3.94 (100.0)	2.15 (54.8)	1.50 (38.1)

Basic Ordering Number	Connection Type and Size	Orifice in.(mm)	Cv	Dimension, in.(mm)				
				A	B	C	D	W
-HBB-MT6-5	6mm Tube	0.19 (4.8)	1.25	2.57 (65.2)	1.50 (38.1)	2.36 (60.0)	1.18 (30.0)	0.75 (19.1)
-HBB-MT8-5	8mm Tube	0.19 (4.8)	1.25	2.63 (66.8)	1.53 (38.8)	2.36 (60.0)	1.18 (30.0)	0.75 (19.1)
-HBB-MT10-7	10mm Tube	0.28 (7.1)	2.50	2.87 (72.9)	1.68 (42.7)	2.36 (60.0)	1.18 (30.0)	0.87 (22.2)
-HBB-MT12-9	12mm Tube	0.35 (8.9)	6.25	3.15 (80.0)	1.83 (46.5)	3.15 (80.0)	1.54 (39.0)	0.87 (22.2)
-HBB-MT14-9	14mm Tube	0.35 (8.9)	6.25	3.24 (82.2)	1.87 (47.5)	3.15 (80.0)	1.54 (39.0)	0.87 (22.2)
-HBB-MT16-12	16mm Tube	0.47 (12.0)	12.65	3.50 (88.9)	2.00 (50.8)	3.94 (100.0)	2.03 (50.7)	1.26 (32.0)
-HBB-MT18-12	18mm Tube	0.47 (12.0)	12.65	3.50 (88.9)	2.00 (50.8)	3.94 (100.0)	2.03 (50.7)	1.26 (32.0)
-HBB-MT22-16	22mm Tube	0.63 (16.0)	17.35	3.96 (100.6)	2.24 (57.1)	3.94 (100.0)	2.15 (54.8)	1.50 (38.1)
-HBB-MT25-16	25mm Tube	0.63 (16.0)	17.35	4.31 (109.5)	2.42 (61.5)	3.94 (100.0)	2.15 (54.8)	1.50 (38.1)

1. Sizes and types listed are standard. Other sizes and types are available upon request, refer to the ordering information.
2. Dimensions are shown with nuts finger-tightened. All dimensions are for reference only and are subject to change.
3. For dimensions not shown above, please contact the authorized representative or the company employees.

Pressure vs. Temperature

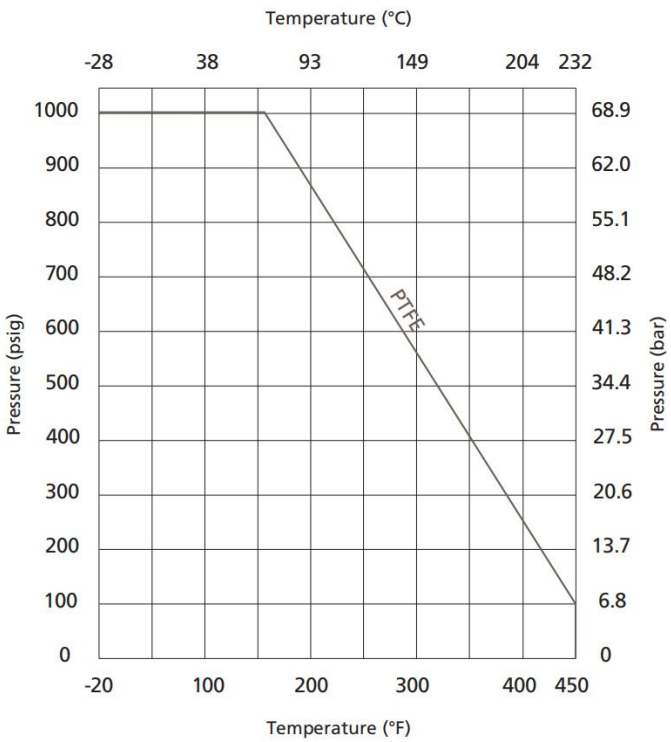

High Performance Ball Valves

HBB Series

Features

- ◎ Bi-directional flow for straight valves
- ◎ Low operating torque
- ◎ Leak-tight performance testing for every valve at the maximum working pressure with nitrogen
- ◎ Positive handle stop
- ◎ Handle as flow direction indicator
- ◎ Options for handle color
- ◎ The inlet of 3-way valvles and angle pattern valves should be only from the bottom.
- ◎ Maximum working pressure: 6000 psig (414 bar)
- ◎ Working temperature: -65 F to 450 F (-54 C to 232 C)

Straight

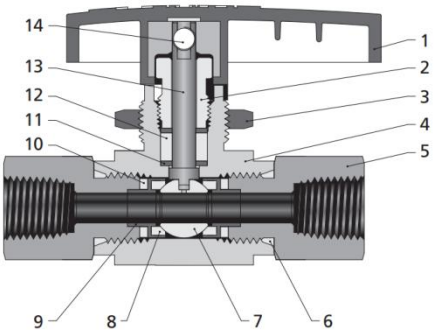

Item	Component	Valve Body Material	
		Stainless steel	Brass
1	Handle	Nylon or Aluminium	
2	Packing Nut	316 SS/A276	C34000/B453
3	Panel Nut	316 SS/A276	C36000/B16
4	Body	CF8M/A351	C37700/B283
5	End Connector	316 SS/A479	C36000/B16
6	Connector O-ring	PTFE	
7	Ball	316 SS/A479	
8	Seat	PTFE or PCTFE or PEEK	
9	Seat Retainer	316 SS/A276	C36000/B16
10	Seat Packing	PTFE	
11	Stem Washer	316/A276	
12	Stem Packing	PTFE or Fluorocarbon FKM or Neoprene or Buna N	
13	Stem	316 SS/A276	
14	Set Screw	Stainless steel	

Angle

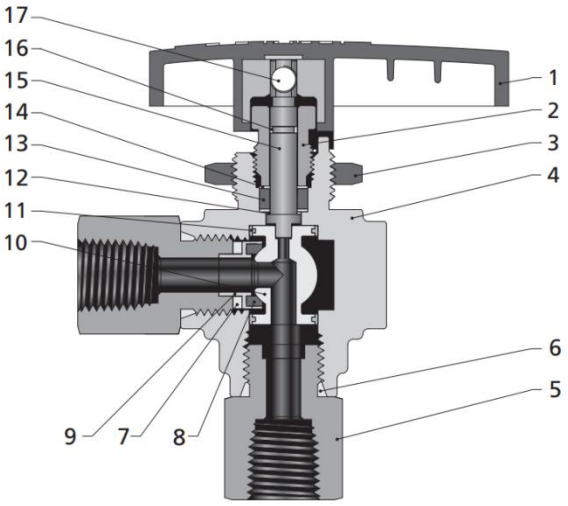

3-way

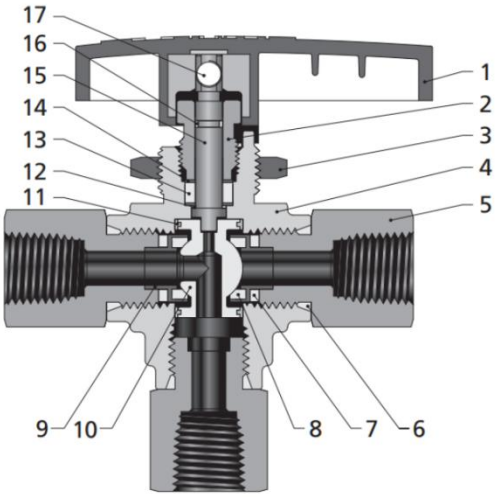

Item	Component	Valve Body Material	
		Stainless Steel	Brass
1	Handle	Nylon or Aluminium	
2	Packing Nut	316 SS/A276	C34000/B453
3	Panel Nut	316 SS/A276	C36000/B16
4	Body	CF8M/A351	C37700/B283
5	End Connector	316 SS/A479	C36000/B16
6	Connector O-ring	PTFE	
7	Seat Packing	PTFE	
8	Seat	PTFE or PCTFE or PEEK	
9	Seat Retainer	316 SS/A276	C36000/B16
10	Ball	316 SS/A479	
11	Trunnion Bearing	PEEK	
12	Stem Back-up Ring	PEEK	
13	Stem Packing	PTFE or Fluorocarbon FKM or Neoprene or Buna N	
14	Stem Washer	316 SS/A276	
15	Stem	316 SS/A276	
16	Stem Bearing	PTFE	
17	Set Screw	Stainless steel	

Straight

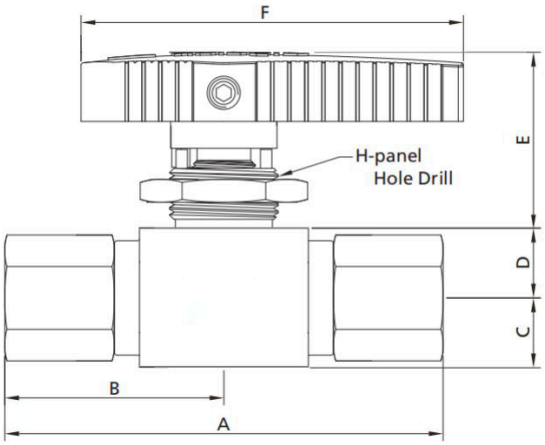

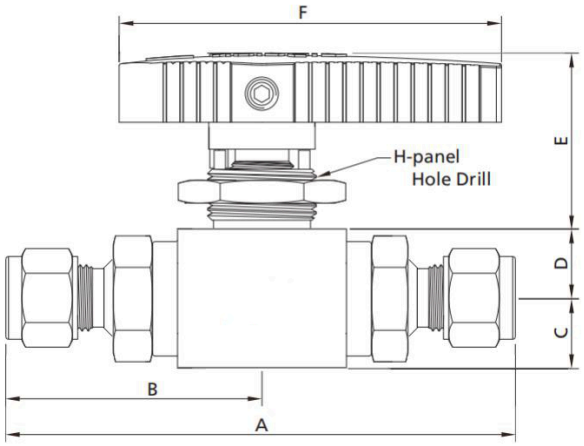

Basic Ordering Number	Connection Type and Size	Orifice in.(mm)	Cv	Dimension, in.(mm)						
				A	B	C	D	E	F	H
-HPB-FN2-4	1/8 Female NPT	0.17 (4.2)	0.93	2.14 (54.4)	1.07 (27.2)	0.36 (9.2)	0.33 (8.5)	0.79 (20.0)	1.97 (50.0)	0.58 (14.7)
-HPB-FN4-6	1/4 Female NPT	0.25 (6.4)	2.34	3.02 (76.8)	1.51 (38.4)	0.48 (12.2)	0.48 (12.2)	1.24 (31.5)	2.64 (67.0)	0.77 (19.6)
-HPB-FN6-10	3/8 Female NPT	0.41 (10.3)	6.42	3.90 (99.0)	1.95 (49.5)	0.75 (19.1)	0.71 (18.0)	1.54 (39.0)	3.78 (96.0)	0.90 (22.9)
-HPB-FN8-10	1/2 Female NPT	0.41 (10.3)	6.42	4.30 (109.2)	2.15 (54.6)	0.75 (19.1)	0.71 (18.0)	1.54 (39.0)	3.78 (96.0)	0.90 (22.9)
-HPB-FN12-10	3/4 Female NPT	0.41 (10.3)	6.42	4.44 (112.8)	2.22 (56.4)	0.75 (19.1)	0.71 (18.0)	1.54 (39.0)	3.78 (96.0)	0.90 (22.9)

Basic Ordering Number	Connection Type and Size	Orifice in.(mm)	Cv	Dimension, in.(mm)						
				A	B	C	D	E	F	H
-HPB-MN2-4	1/8 Male NPT	0.17 (4.2)	0.93	2.36 (60.0)	1.18 (30.0)	0.36 (9.2)	0.33 (8.5)	0.79 (20.0)	1.97 (50.0)	0.58 (14.7)
-HPB-MN4-6	1/4 Male NPT	0.25 (6.4)	2.34	3.24 (82.2)	1.62 (41.1)	0.48 (12.2)	0.48 (12.2)	1.24 (31.5)	2.64 (67.0)	0.77 (19.6)
-HPB-MN6-6	3/8 Male NPT	0.25 (6.4)	2.34	3.24 (82.2)	1.62 (41.1)	0.48 (12.2)	0.48 (12.2)	1.24 (31.5)	2.64 (67.0)	0.77 (19.6)
-HPB-MN8-10	1/2 Male NPT	0.41 (10.3)	6.42	4.44 (112.8)	2.22 (56.4)	0.75 (19.1)	0.71 (18.0)	1.54 (39.0)	3.78 (96.0)	0.90 (22.9)
-HPB-MN12-10	3/4 Male NPT	0.41 (10.3)	6.42	4.44 (112.8)	2.22 (56.4)	0.75 (19.1)	0.71 (18.0)	1.54 (39.0)	3.78 (96.0)	0.90 (22.9)
-HPB-FT2-2	1/8 Tube	0.09 (2.4)	0.21	2.72 (69.0)	1.36 (34.5)	0.36 (9.2)	0.33 (8.5)	0.79 (20.0)	1.97 (50.0)	0.58 (14.7)
-HPB-FT4-4	1/4 Tube	0.17 (4.2)	0.93	3.48 (88.4)	1.74 (44.2)	0.36 (9.2)	0.33 (8.5)	0.79 (20.0)	1.97 (50.0)	0.58 (14.7)
-HPB-FT6-6	3/8 Tube	0.25 (6.4)	2.34	3.60 (91.4)	1.80 (45.7)	0.48 (12.2)	0.48 (12.2)	1.24 (31.5)	2.64 (67.0)	0.77 (19.6)
-HPB-FT8-10	1/2 Tube	0.41 (10.3)	6.42	4.68 (118.8)	2.34 (59.4)	0.75 (19.1)	0.71 (18.0)	1.54 (39.0)	3.78 (96.0)	0.90 (22.9)
-HPB-FT12-10	3/4 Tube	0.41 (10.3)	6.42	4.68 (118.8)	2.34 (59.4)	0.75 (19.1)	0.71 (18.0)	1.54 (39.0)	3.78 (96.0)	0.90 (22.9)
-HPB-MT2-2	3mm Tube	0.09 (2.4)	0.21	2.72 (69.0)	1.36 (34.5)	0.36 (9.2)	0.33 (8.5)	0.79 (20.0)	1.97 (50.0)	0.58 (14.7)
-HPB-MT6-4	6mm Tube	0.17 (4.2)	0.93	3.48 (88.4)	1.74 (44.2)	0.36 (9.2)	0.33 (8.5)	0.79 (20.0)	1.97 (50.0)	0.58 (14.7)
-HPB-MT8-4	8mm Tube	0.25 (6.4)	2.34	3.56 (90.4)	1.78 (45.2)	0.48 (12.2)	0.48 (12.2)	1.24 (31.5)	2.64 (67.0)	0.77 (19.6)
-HPB-MT10-6	10mm Tube	0.25 (6.4)	2.34	3.60 (91.4)	1.80 (45.7)	0.48 (12.2)	0.48 (12.2)	1.24 (31.5)	2.64 (67.0)	0.77 (19.6)
-HPB-MT12-9h	12mm Tube	0.37 (9.5)	5.57	4.68 (118.8)	2.34 (59.4)	0.75 (19.1)	0.71 (18.0)	1.54 (39.0)	3.78 (96.0)	0.90 (22.9)
-HPB-MT14-10	14mm Tube	0.41 (10.3)	6.42	4.68 (118.8)	2.34 (59.4)	0.75 (19.1)	0.71 (18.0)	1.54 (39.0)	3.78 (96.0)	0.90 (22.9)
-HPB-MT18-10	18mm Tube	0.41 (10.3)	6.42	4.68 (118.8)	2.34 (59.4)	0.75 (19.1)	0.71 (18.0)	1.54 (39.0)	3.78 (96.0)	0.90 (22.9)

1. Sizes and types listed are standard. Other sizes and types are available upon request, refer to the ordering information.
2. Dimensions are shown with nuts finger-tightened. All dimensions are for reference only and are subject to change.
3. For dimensions not shown above, please contact the authorized representative or the company employees.

Angle

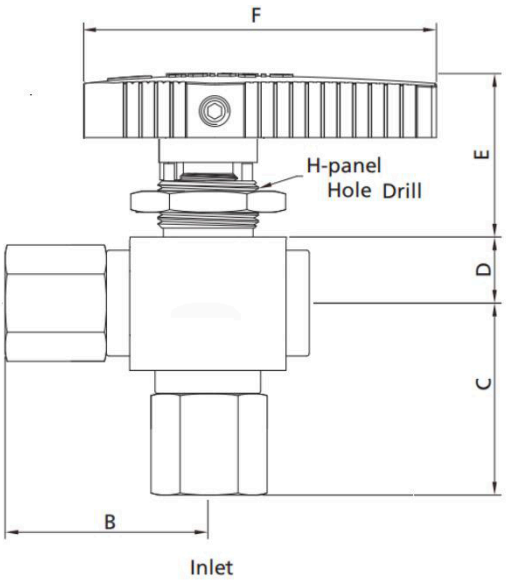

3-way

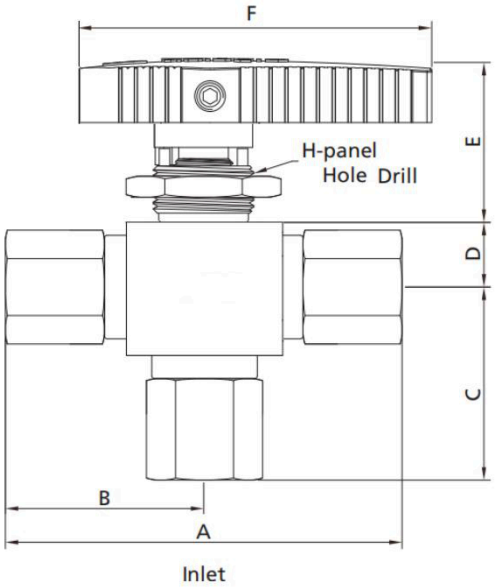

Basic Ordering Number	Connection Type and Size	Orifice in.(mm)	Cv	Dimension, in.(mm)						
				A	B	C	D	E	F	H
-HPB-FN2-3-A	1/8 Female NPT	0.12	0.28	2.14	1.07	1.12	0.33	0.94	1.97	0.58
-HPB-FN2-3-3W		(3.0)		(54.4)	(27.2)	(28.5)	(8.5)	(23.9)	(50.0)	(14.7)
-HPB-FN4-5-A	1/4 Female NPT	0.19	0.70	3.02	1.51	1.65	0.48	1.24	2.64	0.77
-HPB-FN4-5-3W		(4.7)		(76.8)	(38.4)	(41.9)	(12.2)	(31.5)	(67.0)	(19.6)
-HPB-FN6-9h-A	3/8 Female NPT	0.39	3.48	3.90	1.95	2.29	0.71	1.54	3.78	0.90
-HPB-FN6-9h-3W		(9.5)		(99.0)	(49.5)	(58.2)	(18.0)	(39.0)	(96.0)	(22.9)
-HPB-FN8-9h-A	1/2 Female NPT	0.39	3.48	4.30	2.15	0.75	0.71	1.54	3.78	0.90
-HPB-FN8-9h-3W		(9.5)		(109.2)	(54.6)	(19.1)	(18.0)	(39.0)	(96.0)	(22.9)
-HPB-FN12-9h-A	3/4 Female NPT	0.39	3.48	4.44	2.22	0.75	0.71	1.54	3.78	0.90
-HPB-FN12-9h-3W		(9.5)		(112.8)	(56.4)	(19.1)	(18.0)	(39.0)	(96.0)	(22.9)
-HPB-MN2-4-A	1/8 Male NPT	0.12	0.28	2.14	1.07	1.12	0.33	0.94	1.97	0.58
-HPB-MN2-4-3W		(3.0)		(54.4)	(27.2)	(28.5)	(8.5)	(23.9)	(50.0)	(14.7)
-HPB-MN4-6-A	1/4 Male NPT	0.19	0.70	3.24	1.62	1.12	0.33	0.94	1.97	0.58
-HPB-MN4-6-3W		(4.7)		(82.2)	(41.1)	(28.5)	(8.5)	(23.9)	(50.0)	(14.7)
-HPB-MN6-10-A	3/8 Male NPT	0.25	2.34	3.24	1.62	0.48	0.48	1.24	2.64	0.77
-HPB-MN6-10-3W		(6.4)		(82.2)	(41.1)	(12.2)	(12.2)	(25.0)	(67.0)	(19.6)
-HPB-MN8-10-A	1/2 Male NPT	0.41	6.42	4.44	2.22	0.75	0.71	1.54	3.78	0.90
-HPB-MN8-10-3W		(10.3)		(112.8)	(56.4)	(19.1)	(18.0)	(39.0)	(96.0)	(22.9)
-HPB-MN12-10-A	3/4 Male NPT	0.41	6.42	4.44	2.22	0.75	0.71	1.54	3.78	0.90
-HPB-MN12-10-SW		(10.3)		(112.8)	(56.4)	(19.1)	(18.0)	(39.0)	(96.0)	(22.9)
-HPB-FT2-2-A	1/8 Tube	0.09	0.21	2.72	1.36	0.36	0.33	0.79	1.97	0.58
-HPB-FT2-2-3W		(2.4)		(69.0)	(34.5)	(9.2)	(8.5)	(20.0)	(50.0)	(14.7)
-HPB-FT4-4-A	1/4 Tube	0.17	0.93	3.48	1.74	0.36	0.33	0.79	1.97	0.58
-HPB-FT4-4-3W		(4.2)		(88.4)	(44.2)	(9.2)	(8.5)	(20.0)	(50.0)	(14.7)
-HPB-FT6-6-A	3/8 Tube	0.25	2.34	3.60	1.80	0.48	0.48	1.24	2.64	0.77
-HPB-FT6-6--3W		(6.4)		(91.4)	(45.7)	(12.2)	(12.2)	(31.5)	(67.0)	(19.6)
-HPB-FT8-10-A	1/2 Tube	0.41	6.42	4.68	2.34	0.75	0.71	1.54	3.78	0.90
-HPB-FT8-10-3W		(10.3)		(118.8)	(59.4)	(19.1)	(18.0)	(39.0)	(96.0)	(22.9)
-HPB-FT12-10-A	3/4 Tube	0.41	6.42	4.68	2.34	0.75	0.71	1.54	3.78	0.90
-HPB-FT12-10-3W		(10.3)		(118.8)	(59.4)	(19.1)	(18.0)	(39.0)	(96.0)	(22.9)

Basic Ordering Number	Connection Type and Size	Orifice in.(mm)	Cv	Dimension, in.(mm)						
				A	B	C	D	E	F	H
-HPB-MT3-2-A	3mm Tube	0.09 (2.4)	0.21	2.72 (69.0)	1.36 (34.5)	0.36 (9.2)	0.33 (8.5)	0.79 (20.0)	1.97 (50.0)	0.58 (14.7)
-HPB-MT3-2-3W										
-HPB-MT6-4-A	6mm Tube	0.17 (4.2)	0.93	3.48 (88.4)	1.74 (44.2)	0.36 (9.2)	0.33 (8.5)	0.79 (20.0)	1.97 (50.0)	0.58 (14.7)
-HPB-MT6-4-3W										
-HPB-MT8-4-A	8mm Tube	0.25 (6.4)	2.34	3.56 (90.4)	1.78 (45.2)	0.48 (12.2)	0.48 (12.2)	1.24 (31.5)	2.64 (67.0)	0.77 (19.6)
-HPB-MT8-4-3W										
-HPB-MT10-6-A	10mm Tube	0.25 (6.4)	2.34	3.60 (91.4)	1.80 (45.7)	0.48 (12.2)	0.48 (12.2)	1.24 (31.5)	2.64 (67.0)	0.77 (19.6)
-HPB-MT10-6-3W										
-HPB-MT12-9h-A	12mm Tube	0.37 (9.5)	5.57	4.68 (118.8)	2.34 (59.4)	0.75 (19.1)	0.71 (18.0)	1.54 (39.0)	3.78 (96.0)	0.90 (22.9)
-HPB-MT12-9h-3W										
-HPB-MT14-10-A	14mm Tube	0.41 (10.3)	6.42	4.68 (118.8)	2.34 (59.4)	0.75 (19.1)	0.71 (18.0)	1.54 (39.0)	3.78 (96.0)	0.90 (22.9)
-HPB-MT14-10-3W										
-HPB-MT18-10-A	18mm Tube	0.41 (10.3)	6.42	4.68 (118.8)	2.34 (59.4)	0.75 (19.1)	0.71 (18.0)	1.54 (39.0)	3.78 (96.0)	0.90 (22.9)
-HPB-MT18-10-3W										

1. Sizes and types listed are standard. Other sizes and types are available upon request, refer to the ordering information.
2. Dimensions are shown with nuts finger-tightened. All dimensions are for reference only and are subject to change.
3. For dimensions not shown above, please contact the authorized representative or the company employees.

Pressure vs. Temperature

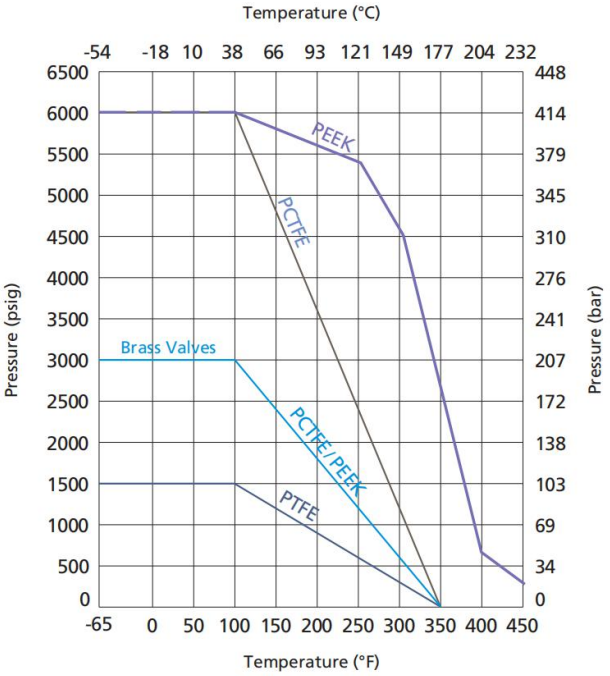

Temperature Ranges

Packing Materials	Temperature Range °F (°C)
PTFE	-65 to 450 (-54 to 232)
Buna-N	-40 to 250 (-40 to 121)
Fluorocarbon FKM	-15 to 450 (-26 to 232)
Neoprene	-40 to 250 (-40 to 121)

Trunnion Ball Valves

TBV and TBVH Series

Features

- Fixed ball with double sealing
- Automatic compensation of seat sealing
- Low operating torque
- Handle as indicator of flow direction
- Positive handle stop
- Handle color options are available
- Compact maximum-flow design
- Trunnion-style ball: Prevents ball blowout.
- 2-or 3-way flow patterns
- Spring-load seats: Provide leak tight integrity in both low and high-pressure systerms, reduce seat wear from pressure surges.
- Leak-tight performance testing for every valve at the maximum working pressure with nitrogen
- TBV Maximum working pressure: 6000 psig (413 bar)
  TBVH Maximum working pressure: 10000 psig (689 bar)
- Working temperature: 0°F to 450°F (-18°C to 232°C)

Standard Materials of Construction

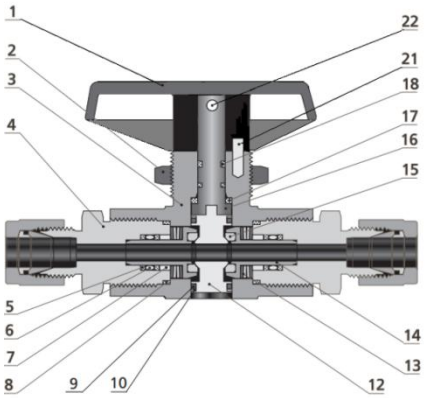

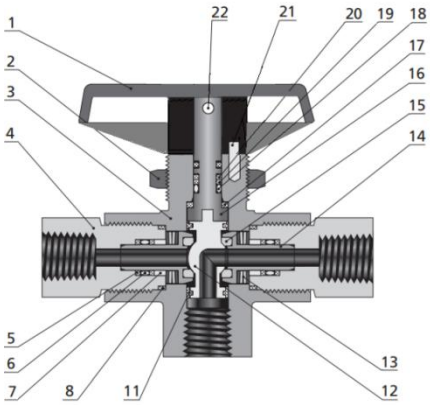

Item	Component	Valve Body Material	
		316 Stainless Steel	
		2-way	3-way
		Material Grade/ASTM Specification	
1	Handle	Nylon or Aluminium	
2	Panel Nut	316 SS/B783	
3	Body	316 SS/A479	316 SS/A182
4	End Connector	316 SS/A479	
5	Seat Retainer Backup Ring	Reinforced PTFE	
6	Seat Retainer O-ring	Fluorocarbon FKM	
7	Seat Retainer Guide	316 SS/A276	
8	End Connector Seal	PTFE/D1710	
9	Trunnion O-ring	Fluorocarbon FKM	——
10	Trunnion Backup Ring	Reinforced PTFE	——
11	Trunnion Bearing	——	PEEK
12	Ball	316 SS/A276	S21800/A276
13	Seat Spring	Alloy X-750/AMS 5542	
14	Seat Retainer	316 SS/A276	
15	Seat	PTFE or PEEK or PCTFE	
16	Stem	316 SS/A276	
17	Stem Washer	Reinforced PTFE	PEEK
18	Stem O-ring	Fluorocarbon FKM	
19	Secondary Stem Backup Ring	——	PTFE/D710
20	Primary Stem Backup Ring	——	PEEK
21	Pin	Stainless Steel	
22	Set Screw	Stainless Steel	

2-way Valves

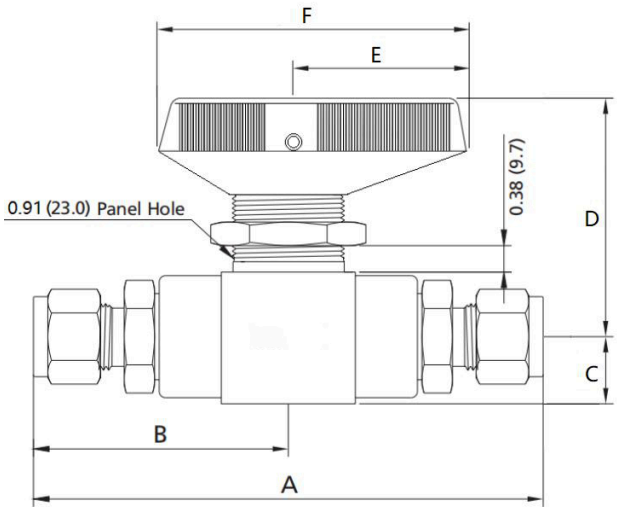

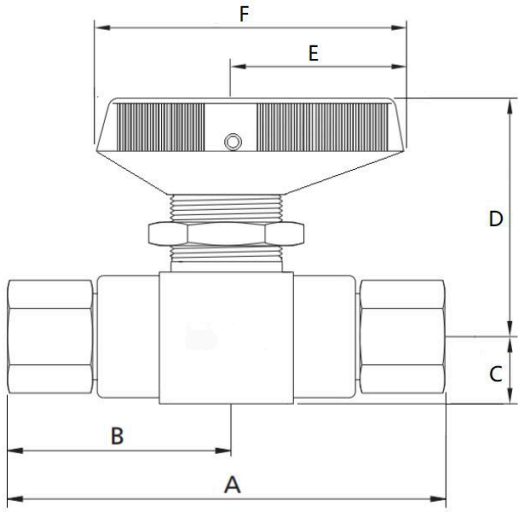

TB Series-6000PSI

Basic Ordering Number	Connection Type and Size	Orifice in.(mm)	Cv	Dimension, in.(mm)					
				A	B	C	D	E	F
-TB-FN2-5	1/8 Female NPT	0.19 (4.8)	1.2	2.94 (74.7)	1.47 (37.3)	0.50 (12.7)	1.88 (47.7)	1.57 (40.0)	2.56 (65.0)
-TB-FN4-5	1/4 Female NPT	0.19 (4.8)	1.2	2.94 (74.7)	1.47 (37.3)	0.50 (12.7)	1.88 (47.7)	1.57 (40.0)	2.56 (65.0)
-TB-FN6-7	3/8 Female NPT	0.19 (4.8)	1.2	3.93 (99.8)	1.97 (49.9)	0.50 (12.7)	1.88 (47.7)	1.57 (40.0)	2.56 (65.0)
-TB-FN8-9	1/2 Female NPT	0.19 (4.8)	1.2	4.25 (108)	2.13 (54.0)	0.50 (12.7)	1.88 (47.7)	1.57 (40.0)	2.56 (65.0)
-TB-FT4-5	1/4 Tube	0.19 (4.8)	1.2	4.09 (103.8)	2.04 (51.9)	0.50 (12.7)	1.88 (47.7)	1.57 (40.0)	2.56 (65.0)
-TB-FT6-5	3/8 Tube	0.19 (4.8)	1.2	4.25 (108)	2.13 (54.0)	0.50 (12.7)	1.88 (47.7)	1.57 (40.0)	2.56 (65.0)
-TB-FT8-5	1/2 Tube	0.19 (4.8)	1.2	4.60 (116.8)	2.30 (58.4)	0.50 (12.7)	1.88 (47.7)	1.57 (40.0)	2.56 (65.0)
-TB-MT4-5	6mm Tube	0.19 (4.8)	1.2	4.09 (103.8)	2.04 (51.9)	0.50 (12.7)	1.88 (47.7)	1.57 (40.0)	2.56 (65.0)
-TB-MT8-5	8mm Tube	0.19 (4.8)	1.2	4.14 (105.2)	2.07 (52.6)	0.50 (12.7)	1.88 (47.7)	1.57 (40.0)	2.56 (65.0)
-TB-MT10-5	10mm Tube	0.19 (4.8)	1.2	4.25 (108)	2.13 (54.0)	0.50 (12.7)	1.88 (47.7)	1.57 (40.0)	2.56 (65.0)
-TB-MT12-5	12mm Tube	0.19 (4.8)	1.2	4.60 (116.8)	2.30 (58.4)	0.50 (12.7)	1.88 (47.7)	1.57 (40.0)	2.56 (65.0)

TBVH Series-10000PSI

Basic Ordering Number	Connection Type and Size	Orifice in.(mm)	Cv	Dimension, in.(mm)					
				A	B	C	D	E	F
-TBH-FN2-5	1/8 Female NPT	0.19 (4.8)	1.2	2.94 (74.7)	1.47 (37.3)	0.50 (12.7)	1.88 (47.7)	1.57 (40.0)	2.56 (65.0)
-TBH-FN4-5	1/4 Female NPT	0.19 (4.8)	1.2	3.93 (99.8)	1.96 (44.9)	0.50 (12.7)	1.88 (47.7)	1.57 (40.0)	2.56 (65.0)
-TBH-FN8-9	1/2 Female NPT	0.19 (4.8)	1.2	4.25 (108)	2.13 (54.0)	0.50 (12.7)	1.88 (47.7)	1.57 (40.0)	2.56 (65.0)

Basic Ordering Number	Connection Type and Size	Orifice in.(mm)	Cv	Dimension, in.(mm)					
				A	B	C	D	E	F
-TBH-FT4-5	1/4 Tube	0.19 (4.8)	1.2	4.09 (103.8)	2.04 (51.9)	0.50 (12.7)	1.88 (47.7)	1.57 (40.0)	2.56 (65.0)
-TBH-FT6-5	3/8 Tube	0.19 (4.8)	1.2	4.25 (108)	2.13 (54.0)	0.50 (12.7)	1.88 (47.7)	1.57 (40.0)	2.56 (65.0)
-TBH-FT8-5	1/2 Tube	0.19 (4.8)	1.2	4.60 (116.8)	2.30 (58.4)	0.50 (12.7)	1.88 (47.7)	1.57 (40.0)	2.56 (65.0)
-TBH-MT4-5	6mm Tube	0.19 (4.8)	1.2	4.09 (103.8)	2.04 (51.9)	0.50 (12.7)	1.88 (47.7)	1.57 (40.0)	2.56 (65.0)
-TBH-MT8-5	8mm Tube	0.19 (4.8)	1.2	4.14 (105.2)	2.07 (52.6)	0.50 (12.7)	1.88 (47.7)	1.57 (40.0)	2.56 (65.0)
-TBH-MT10-5	10mm Tube	0.19 (4.8)	1.2	4.25 (108)	2.13 (54.0)	0.50 (12.7)	1.88 (47.7)	1.57 (40.0)	2.56 (65.0)
-TBH-MT12-5	12mm Tube	0.19 (4.8)	1.2	4.60 (116.8)	2.30 (58.4)	0.50 (12.7)	1.88 (47.7)	1.57 (40.0)	2.56 (65.0)

3-way Valves

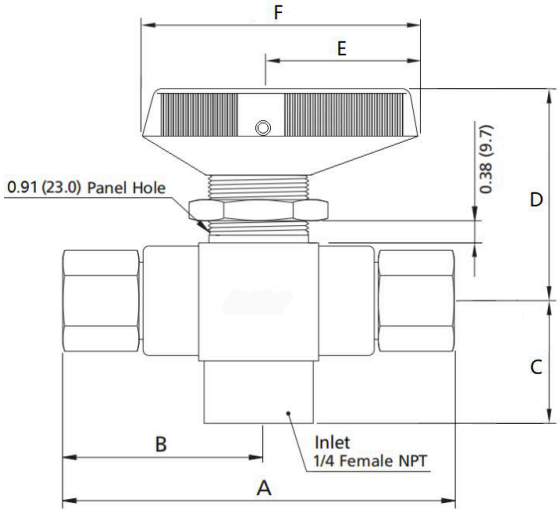

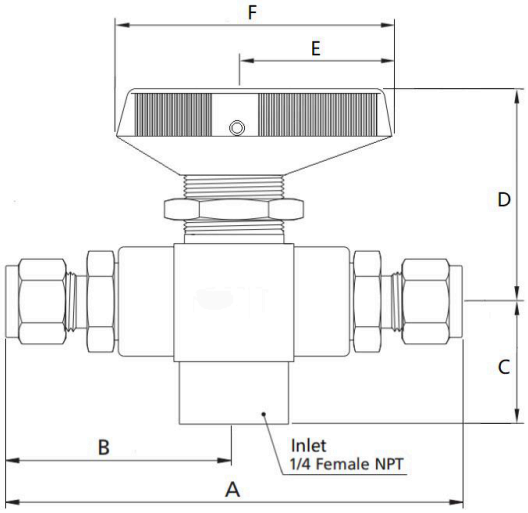

TVB Series-6000PSI

Basic Ordering Number	Connection Type and Size	Orifice in.(mm)	Cv	Dimension, in.(mm)					
				A	B	C	D	E	F
-TB-FN2-5-3W	1/8 Female NPT	0.19 (4.8)	0.75	2.94 (74.7)	1.47 (37.3)	1.06 (26.9)	1.88 (47.7)	1.57 (40.0)	2.56 (65.0)
-TB-FN4-5-3W	1/4 Female NPT	0.19 (4.8)	0.75	2.94 (74.7)	1.47 (37.3)	1.06 (26.9)	1.88 (47.7)	1.57 (40.0)	2.56 (65.0)
-TB-FN6-7-3W	3/8 Female NPT	0.19 (4.8)	0.75	3.93 (99.8)	1.97 (49.9)	1.06 (26.9)	1.88 (47.7)	1.57 (40.0)	2.56 (65.0)
-TB-FN8-9-3W	1/2 Female NPT	0.19 (4.8)	0.75	4.25 (108)	2.13 (54.0)	1.06 (26.9)	1.88 (47.7)	1.57 (40.0)	2.56 (65.0)
-TB-FT4-5-3W	1/4 Tube	0.19 (4.8)	0.75	4.09 (103.8)	2.04 (51.9)	1.06 (26.9)	1.88 (47.7)	1.57 (40.0)	2.56 (65.0)
-TB-FT6-5-3W	3/8 Tube	0.19 (4.8)	0.75	4.25 (108)	2.13 (54.0)	1.06 (26.9)	1.88 (47.7)	1.57 (40.0)	2.56 (65.0)
-TB-FT8-5-3W	1/2 Tube	0.19 (4.8)	0.75	4.60 (116.8)	2.30 (58.4)	1.06 (26.9)	1.88 (47.7)	1.57 (40.0)	2.56 (65.0)
-TB-MT4-5-3W	6mm Tube	0.19 (4.8)	0.75	4.09 (103.8)	2.04 (51.9)	1.06 (26.9)	1.88 (47.7)	1.57 (40.0)	2.56 (65.0)
-TB-MT8-5	8mm Tube	0.19 (4.8)	0.75	4.14 (105.2)	2.07 (52.6)	1.06 (26.9)	1.88 (47.7)	1.57 (40.0)	2.56 (65.0)
-TB-MT10-5	10mm Tube	0.19 (4.8)	0.75	4.25 (108)	2.13 (54.0)	1.06 (26.9)	1.88 (47.7)	1.57 (40.0)	2.56 (65.0)
-TB-MT12-5	12mm Tube	0.19 (4.8)	0.75	4.60 (116.8)	2.30 (58.4)	1.06 (26.9)	1.88 (47.7)	1.57 (40.0)	2.56 (65.0)

TBH Series-10000PSI

Basic Ordering Number	Connection Type and Size	Orifice in.(mm)	Cv	Dimension, in.(mm)					
				A	B	C	D	E	F
-TBH-FN2-5-3W	1/8 Female NPT	0.19 (4.8)	0.75	2.94 (74.7)	1.47 (37.3)	1.06 (26.9)	1.88 (47.7)	1.57 (40.0)	2.56 (65.0)
-TBH-FN4-5-3W	1/4 Female NPT	0.19 (4.8)	0.75	2.94 (74.7)	1.47 (37.3)	1.06 (26.9)	1.88 (47.7)	1.57 (40.0)	2.56 (65.0)
-TBH-FN8-9-3W	1/2 Female NPT	0.19 (4.8)	0.75	4.25 (108)	2.13 (54.0)	1.06 (26.9)	1.88 (47.7)	1.57 (40.0)	2.56 (65.0)
-TBH-FT4-5-3W	1/4 Tube	0.19 (4.8)	0.75	4.09 (103.8)	2.04 (51.9)	1.06 (26.9)	1.88 (47.7)	1.57 (40.0)	2.56 (65.0)
-TBH-FT6-5-3W	3/8 Tube	0.19 (4.8)	0.75	4.25 (108)	2.13 (54.0)	1.06 (26.9)	1.88 (47.7)	1.57 (40.0)	2.56 (65.0)
-TBH-FT8-5-3W	1/2 Tube	0.19 (4.8)	0.75	4.60 (116.8)	2.30 (58.4)	1.06 (26.9)	1.88 (47.7)	1.57 (40.0)	2.56 (65.0)
-TBH-MT4-5-3W	6mm Tube	0.19 (4.8)	0.75	4.09 (103.8)	2.04 (51.9)	1.06 (26.9)	1.88 (47.7)	1.57 (40.0)	2.56 (65.0)
-TBH-MT8-5-3W	8mm Tube	0.19 (4.8)	0.75	4.14 (105.2)	2.07 (52.6)	1.06 (26.9)	1.88 (47.7)	1.57 (40.0)	2.56 (65.0)
-TBH-MT10-5-3W	10mm Tube	0.19 (4.8)	0.75	4.25 (108)	2.13 (54.0)	1.06 (26.9)	1.88 (47.7)	1.57 (40.0)	2.56 (65.0)
-TBH-MT12-5-3W	12mm Tube	0.19 (4.8)	0.75	4.60 (116.8)	2.30 (58.4)	1.06 (26.9)	1.88 (47.7)	1.57 (40.0)	2.56 (65.0)

1. Sizes and types listed are standard. Other sizes and types are available upon request, refer to the ordering information.
2. Dimensions are shown with nuts finger-tightened. All dimensions are for reference only and are subject to change.
3. For dimensions not shown above, please contact the authorized representative or the company employees.

Pressure vs. Temperature

TBV Series

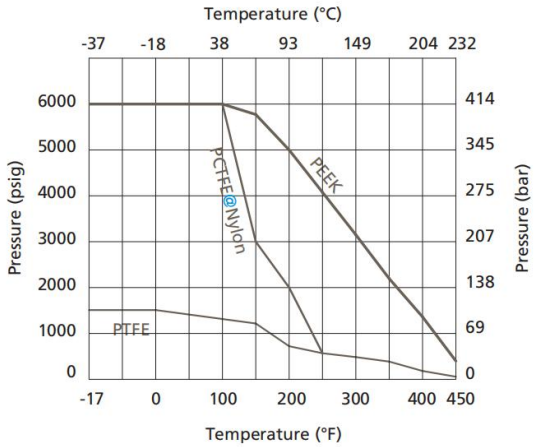

TBVH Series

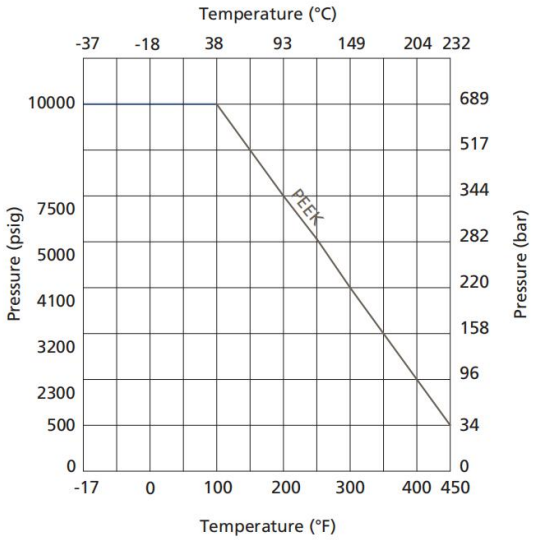

TB & TBH Series Seal Kits

1. Seal kits contain components of the same material as original valve. See standard material of construction.
2. To complete the ordering number, please add SK for seal kits. Example: TBSS-FN4-5-3W-SK

3-piece Ball Valves

PB Series

Features

- Casting valve bady
- Full orifice design
- Leak-tight performance testing for every valve at the maximum working pressure with nitrogen
- Maximum working pressure: 1000 psig (68.9 bar)
- Working temperature: -20°F to 450°F (-28°C to 232°C)

Standard Materials of Construction

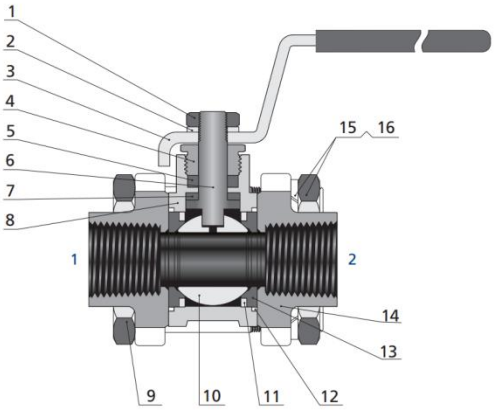

Item	Component	Valve Body Material
1	Stem Nut	Gr. 8M/A194
2	Gasket	304 SS
3	Handle	304 SS/A240 (with vinyl sleeve)
4	Gland	316 SS/A276 or 304 SS/A276
5	Stem Packing	PTFE/D1710
6	Stem	316 SS/A276 or 304 SS/A276
7	Stem Bearing	PTFE/D1710
8	Body	316 SS/A276 or 304 SS/A276
9	Body Bolt	Gr. 8M/A193
10	Ball	316 SS/A276 or 304 SS/A276
11	Support Ring	316 SS/A240 or 304 SS/A240
12	Flange Seal	PTFE/D1710
13	Seat	PTFE/D1710
14	Flange	316 SS/A276 or 304 SS/A276
15	Gasket	304 SS
16	Nut	Gr. 8M/A194

Dimensions

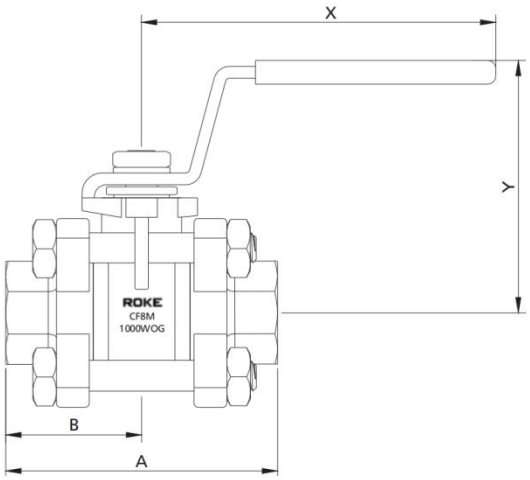

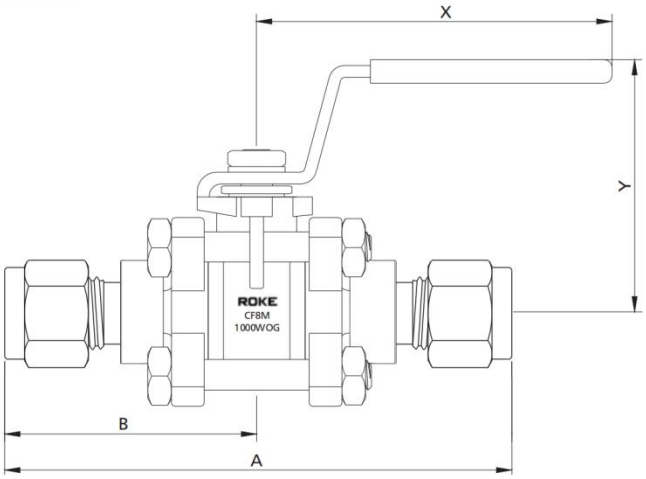

Basic Ordering Number	Connection Type and Size	Orifice in.(mm)	Cv	Dimension, in.(mm)			
				A	B	X	Y
-PB-FN2-5	1/8 Female NPT	0.19 (4.8)	1.20	2.05 (52.0)	1.03 (26.0)	2.69 (68.3)	1.46 (37.0)
-PB-FN4-7	1/4 Female NPT	0.28 (7.1)	3.80	2.63 (66.8)	1.31 (33.4)	2.69 (68.3)	1.46 (37.0)
-PB-FN6-13	3/8 Female NPT	0.50 (12.7)	11.3	2.57 (65.2)	1.28 (32.6)	3.94 (100.0)	2.19 (55.7)
-PB-FN8-15	1/2 Female NPT	0.59 (15.0)	13.0	2.74 (69.6)	1.37 (34.8)	3.94 (100.0)	2.19 (55.7)
-PB-FN12-202	3/4 Female NPT	0.79 (20.0)	50.0	3.15 (80.0)	1.57 (40.0)	5.18 (131.5)	2.66 (67.5)
-PB-FN16-25	1 Female NPT	0.98 (25.0)	93.0	3.00 (76.5)	1.50 (38.1)	5.95 (151.2)	3.08 (78.2)
-PB-FN20-20	1 1/4 Female NPT	1.26 (32.0)	110	4.33 (110.0)	2.17 (55.0)	6.14 (156.0)	3.19 (81.0)
-PB-FN24-24	1 1/2 Female NPT	1.50 (38.1)	130	4.72 (120.0)	2.36 (60.0)	7.19 (182.5)	3.70 (94.0)
-PB-FN32-32	2 Female NPT	1.97 (50.0)	270	5.51 (140.0)	2.75 (70.0)	7.19 (182.5)	4.11 (104.5)
-PB-FN40-63	2 1/2 Female NPT	2.50 (63.5)	350	7.28 (185.0)	3.64 (92.5)	9.92 (252.0)	5.16 (131.0)
-PB-FN50-76	3 Female NPT	2.99 (76.0)	500	8.07 (205.0)	4.04 (102.5)	9.92 (252.0)	5.47 (139.0)
-PB-FT4-5	1/4 Tube	0.19 (4.8)	1.25	2.63 (66.8)	1.31 (33.4)	2.69 (68.3)	1.46 (37.0)
-PB-FT6-7	3/8 Tube	0.28 (7.1)	2.50	2.63 (66.8)	1.31 (33.4)	2.69 (68.3)	1.46 (37.0)
-PB-FT8-10	1/2 Tube	0.41 (10.5)	7.40	4.04 (103)	2.02 (51.3)	3.94 (100.0)	2.19 (55.7)
-PB-FT12-15	3/4 Tube	0.59 (15.0)	13.0	4.33 (110)	2.17 (55.0)	3.94 (100.0)	2.19 (55.7)
-PB-FT16-20	1 Tube	0.79 (20.0)	50.0	5.12 (130.0)	2.56 (65.0)	5.18 (131.5)	2.66 (67.5)
-PB-MT6-5	6mm Tube	0.19 (4.8)	1.25	2.63 (66.8)	1.31 (33.4)	2.69 (68.3)	1.46 (37.0)
-PB-MT8-5	8mm Tube	0.19 (4.8)	1.25	2.63 (66.8)	1.31 (33.4)	2.69 (68.3)	1.46 (37.0)
-PB-MT10-7	10mm Tube	0.28 (7.1)	2.50	2.63 (66.8)	1.31 (33.4)	2.69 (68.3)	1.46 (37.0)
-PB-MT12-10	12mm Tube	0.41 (10.5)	7.40	4.04 (103)	2.02 (51.3)	3.94 (100.0)	2.19 (55.7)
-PB-MT14-10	14mm Tube	0.41 (10.5)	7.40	4.04 (103)	2.02 (51.3)	3.94 (100.0)	2.19 (55.7)
-PB-MT16-10	16mm Tube	0.41 (10.5)	7.40	4.04 (106)	2.02 (51.3)	3.94 (100.0)	2.19 (55.7)
-PB-MT18-15	18mm Tube	0.59 (15.0)	13.0	4.33 (110)	2.17 (55.0)	3.94 (100.0)	2.19 (55.7)
-PB-MT20-15	20mm Tube	0.59 (15.0)	13.0	4.56 (116)	2.28 (58.0)	3.94 (100.0)	2.19 (55.7)
-PB-MT25-20	25mm Tube	0.79 (20.0)	50.0	5.12 (130.0)	2.56 (65.0)	5.18 (131.5)	2.66 (67.5)

1. Sizes and types listed are standard. Other sizes and types are available upon request, refer to the ordering information.
2. Dimensions are shown with nuts finger-tightened. All dimensions are for reference only and are subject to change.
3. For dimensions not shown above, please contact the authorized representative or the company employees.

Hydraulic Ball Valves

Contents

Part NO. Description

SS - KHB - FN 8 - DN13 - PN500 - K

Material	Series	Inlet or Outlet	Size	Orifice	Pressure	Packing
SS: SS 316	KHB Series	FN: Female Npt	2: 1/8″	DN 4	PN 500	M: POM
S9: SS 904L	KHM Series	MN: Male Npt	4: 1/4″	DN 6	PN 400	K: PEEK
S4: SS 304	KHR Series	FR: Female BSPT	6: 3/8″	DN 8	PN 315	
S2: SS 321	KHB-3W Series	MR: Male BSPT	8: 1/2″	DN 10		
M4: Monle 400		FG: Female BSPP	10: 5/8″	DN 13		
I6: Inconle 625		SW: Socket Weld	12: 3/4″	DN 16		
HC: Hastelly C 276			16: 1″	DN 20		
CS: Cabon Steel			20: 1.1/4"	DN 25		
			24: 1.1/2"	DN 32		

Construction

1. 2-way Ball Valves (DIN-ISO1219)

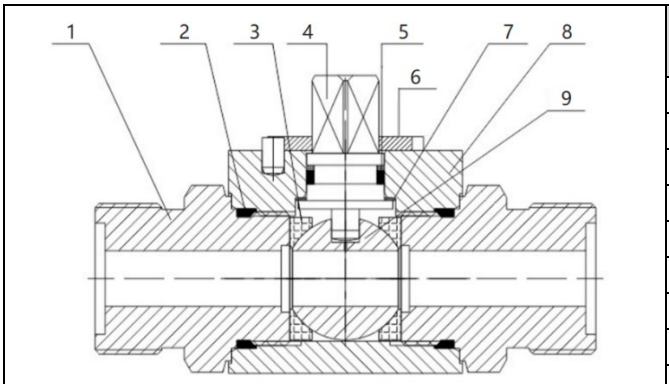

Item	Name	Material	
		Stainless Steel	Carbon Steel
1	Fittings	SS 316 / SS 304	A105 / 45#
2	O-ring	FKM	NBR
3	Packing	POM / PEEK	POM
4	Stem	SS 316 / SS 304	A105 / 45#
5	O-ring	POM / PEEK	POM
6	stop Pin	SS 316 / SS 304	A105 / 45#
7	Washer	SS 316 / SS 304	A105 / 45#
8	Body	SS 316 / SS 304	A105 / 45#
9	Ball	SS 316 / SS 304	A105 / 45#

2. 3-way Ball Valves (DIN2429)

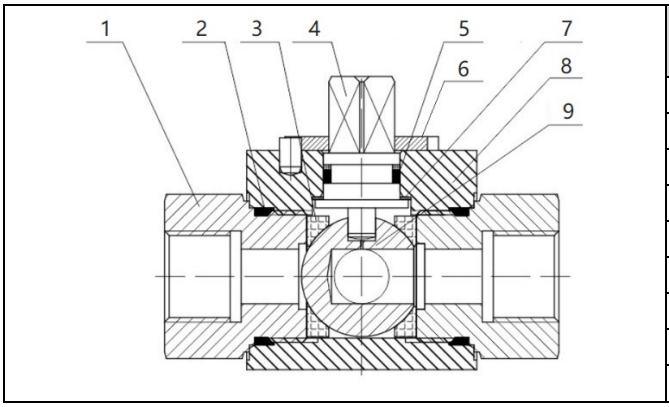

Item	Name	Material	
		Stainless Steel	Carbon Steel
1	Fittings	SS 316 / SS 304	A105 / 45#
2	O-ring	FKM	NBR
3	Packing	POM / PEEK	POM
4	Stem	SS 316 / SS 304	A105 / 45#
5	O-ring	POM / PEEK	POM
6	stop Pin	SS 316 / SS 304	A105 / 45#
7	Washer	SS 316 / SS 304	A105 / 45#
8	Body	SS 316 / SS 304	A105 / 45#
9	Ball	SS 316 / SS 304	A105 / 45#

3. Multi way ball valve (DIN2429)

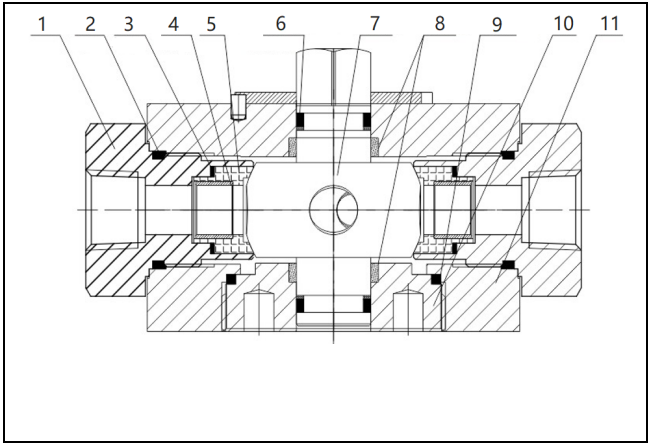

Item	Name	Material	
		Stainless Steel	Carbon Steel
1	Fittings	SS316 / SS304	A105 / 45#
2	O-ring	FKM	NBR
3	O-ring	FKM	NBR
4	Support Ring	SS316 / SS304	A105 / 45#
5	Packing	POM / PEEK	POM
6	O-ring	FKM	NBR
7	Ball	SS316 / SS304	A105 / 45#
8	Guide bearing	SS316 / SS304	A105 / 45#
9	O-ring	FKM	NBR
10	Cover Plate	SS316 / SS304	A105 / 45#
11	Body	SS316 / SS304	A105 / 45#

4. Flange Ball Valve (DIN-ISO1219)

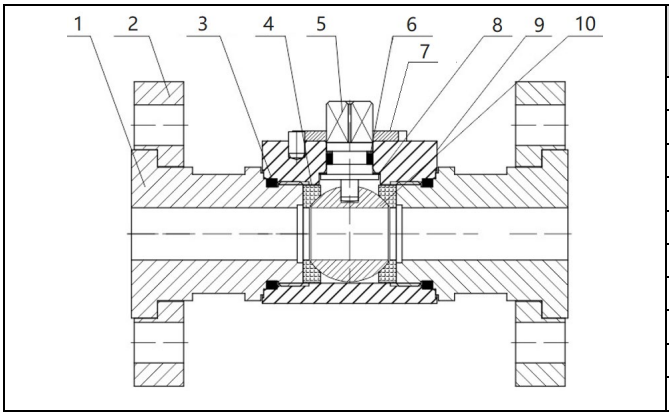

Item	Name	Material	
		Stainless Steel	Carbon Steel
1	Fittings	SS 316 / SS 304	A105 / 45#
2	Flange	SS 316 / SS 304	A105 / 45#
3	O-ring	FKM	NBR
4	Packing	POM / PEEK	POM
5	Stem	SS 316 / SS 304	A105 / 45#
6	O-ring	FKM	NBR
7	stop Pin	SS 316 / SS 304	A105 / 45#
8	Washer	SS 316 / SS 304	A105 / 45#
9	Body	SS 316 / SS 304	A105 / 45#
10	Ball	SS 316 / SS 304	A105 / 45#

KHB/KHM Series

KHB

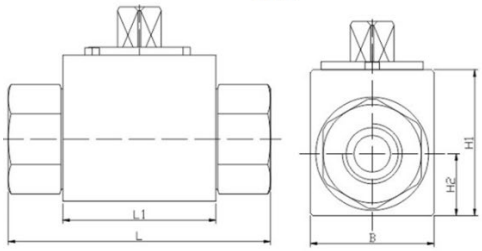

KHM

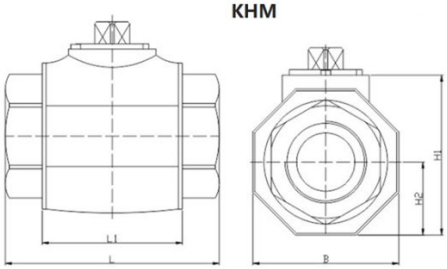

Dimensions

	Part NO.	PN	DN	Dimension(mm)									
				D1	D2	DM	L	L1	L2	L3	H1	H2	B
M 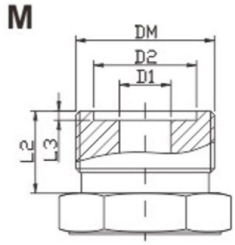	KHB-M16	500	06	6	11	M16*1.5	69	40	11	1.4	32	13	26
	KHB-M22	500	08	8	16	M22*1.5	76	42	12	1.8	40	17	34
	KHB-M27	500	10	10	20	M27*1.5	76	42	12	1.8	40	17	34
	KHB-M30	400	16	15	24	M30*1.5	84	48	13	1.8	45	19	38
	KHB-M36	315	20	19	30	M36*2	103	60	15	2.4	56	24	48
	KHB-M42	315	25	24	35	M42*2	116	64	18	2.4	63	29	58
	KHB-M52	315	32	30	40	M52*2	149	72	20	2.4	75	34	69
	KHB-M60	315	40	36	45	M60*2	174	80	22	2.4	86	40	80
G 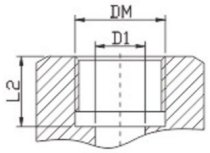	KHB-FG2	500	04	4	-	G1/8	69	40	10	-	32	13	26
	KHB-FG4	500	06	6	-	G1/4	69	40	14	-	32	13	26
	KHB-FG6	500	10	10	-	G3/8	72	42	14	-	40	17	34
	KHB-FG8	500	13	13	-	G1/2	83	48	16	-	40	17	34
	KHB-FG8	400	16	15	-	G1/2	83	48	16	-	45	19	38
	KHB-FG12	315	20	19	-	G3/4	95	60	18	-	56	24	48
	KHB-FG16	315	25	24	-	G1	113	64	20	-	63	29	58
	KHB-FG20	315	32	30	-	G11/4	110	72	22	-	75	34	68
	KHB-FG24	315	40	38	-	G11/2	130	80	24	-	86	40	80
	KHB-FG32	315	50	48	-	G2	140	96	26	-	104	48	99
NPT 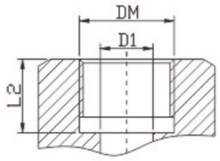	KHB-FN2	500	04	4	-	NPT1/8	69	40	10	-	32	13	26
	KHB-FN4	500	06	6	-	NPT1/4	69	40	14	-	32	13	26
	KHB-FN6	500	10	10	-	NPT3/8	72	42	14	-	40	17	34
	KHB-FN8	500	13	13	-	NPT1/2	83	48	16	-	40	17	34
	KHB-FN8	400	16	15	-	NPT1/2	83	48	16	-	45	19	38
	KHB-FN12	315	20	19	-	NPT3/4	95	60	18	-	56	24	48
	KHB-FN16	315	25	24	-	NPT1	113	64	20	-	63	29	58
	KHB-FN20	315	32	30	-	NPT11/4	110	72	22	-	75	34	68
	KHB-FN24	315	40	38	-	NPT11/2	130	80	24	-	86	40	80
	KHB-FN32	315	50	48	-	NPT2	140	96	26	-	104	48	99
LR 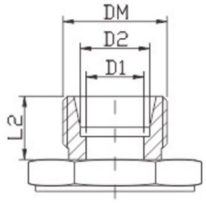	KHB-06LR	500	04	4	6	M12*1.5	67	40	10	-	32	13	26
	KHB-08LR	500	06	6	8	M14*1.5	67	40	10	-	32	13	26
	KHB-10LR	500	08	8	10	M16*1.5	74	42	11	-	40	17	34
	KHB-12LR	500	10	10	12	M18*1.5	74	42	11	-	40	17	34
	KHB-15LR	500	13	12	15	M22*1.5	82	48	12	-	40	17	34
	KHB-18LR	400	16	15	18	M26*1.5	82	48	12	-	40	17	34
	KHB-22LR	315	20	19	22	M30*2	101	60	14	-	56	24	48
	KHB-28LR	315	25	24	28	M36*2	108	64	14	-	63	29	58
	KHB-35LR	315	32	30	35	M45*2	141	72	16	-	75	34	68
	KHB-42LR	315	40	36	42	M52*2	162	80	16	-	86	40	80
SR 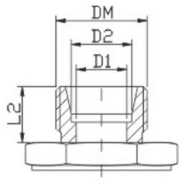	KHB-08SR	500	04	4	8	M16*1.5	73	40	12	-	32	13	26
	KHB-10SR	500	06	6	10	M18*1.5	73	40	12	-	32	13	26
	KHB-12SR	500	08	8	12	M20*1.5	76	42	12	-	40	17	34
	KHB-14SR	500	10	10	14	M22*1.5	80	42	14	-	40	17	34
	KHB-16SR	500	13	12	16	M24*1.5	86	48	14	-	40	17	34
	KHB-20SR	500	13	12	20	M30*2	90	48	16	-	40	17	34
	KHB-20SR	400	16	15	20	M30*2	90	48	16	-	45	19	38
	KHB-25SR	315	20	19	25	M36*2	109	60	18	-	56	24	48
	KHB-30SR	315	25	24	30	M42*2	120	64	20	-	63	29	58
	KHB-38SR	315	32	30	38	M52*2	153	72	22	-	75	34	68

KHR Series

KHR

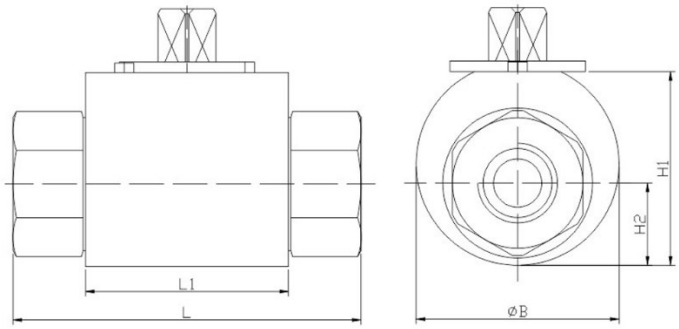

Dimensions

	Part NO.	PN	DN	Dimension(mm)									
				D1	D2	DM	L	L1	L2	L3	H1	H2	ØB
M 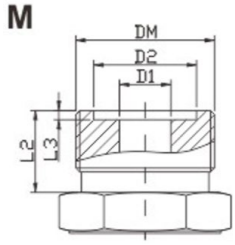	KHR-M16	500	06	6	11	M16*1.5	69	40	11	1.4	32	13	35
	KHR-M22	500	08	8	16	M22*1.5	76	42	12	1.8	40	17	42
	KHR-M27	500	10	10	20	M27*1.5	76	42	12	1.8	40	17	42
	KHR-M30	400	16	15	24	M30*1.5	84	48	13	1.8	45	19	50
	KHR-M36	315	20	19	30	M36*2	103	60	15	2.4	56	24	60
	KHR-M42	315	25	24	35	M42*2	116	64	18	2.4	63	29	68
	KHR-M52	315	32	30	40	M52*2	149	72	20	2.4	75	34	87
	KHR-M60	315	40	36	45	M60*2	174	80	22	2.4	86	40	95
G 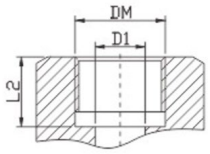	KHR-FG2	500	04	4	-	G1/8	69	40	10	-	32	13	35
	KHR-FG4	500	06	6	-	G1/4	69	40	14	-	32	13	35
	KHR-FG6	500	10	10	-	G3/8	72	42	14	-	40	17	42
	KHR-FG8	500	13	13	-	G1/2	83	48	16	-	40	17	45
	KHR-FG8	400	16	15	-	G1/2	83	48	16	-	45	19	50
	KHR-FG12	315	20	19	-	G3/4	95	60	18	-	56	24	60
	KHR-FG16	315	25	24	-	G1	113	64	20	-	63	29	68
	KHR-FG20	315	32	30	-	G11/4	110	72	22	-	75	34	87
	KHR-FG24	315	40	38	-	G11/2	130	80	24	-	86	40	95
	KHR-FG32	315	50	48	-	G2	140	96	26	-	104	48	112
NPT 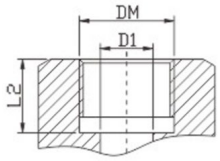	KHR-FN2	500	04	4	-	NPT1/8	69	40	10	-	32	13	35
	KHR-FN4	500	06	6	-	NPT1/4	69	40	14	-	32	13	35
	KHR-FN6	500	10	10	-	NPT3/8	72	42	14	-	40	17	42
	KHR-FN8	500	13	13	-	NPT1/2	83	48	16	-	40	17	45
	KHR-FN8	400	16	15	-	NPT1/2	83	48	16	-	45	19	50
	KHR-FN12	315	20	19	-	NPT3/4	95	60	18	-	56	24	60
	KHR-FN16	315	25	24	-	NPT1	113	64	20	-	63	29	68
	KHR-FN20	315	32	30	-	NPT11/4	110	72	22	-	75	34	87
	KHR-FN24	315	40	38	-	NPT11/2	130	80	24	-	86	40	95
	KHR-FN32	315	50	48	-	NPT2	140	96	26	-	104	48	112
LR 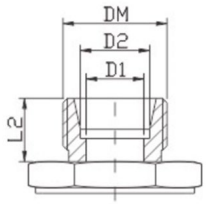	KHR-06LR	500	04	4	6	M12*1.5	67	40	10	-	32	13	35
	KHR-08LR	500	06	6	8	M14*1.5	67	40	10	-	32	13	35
	KHR-10LR	500	08	8	10	M16*1.5	74	42	11	-	40	17	42
	KHR-12LR	500	10	10	12	M18*1.5	74	42	11	-	40	17	42
	KHR-15LR	500	13	12	15	M22*1.5	82	48	12	-	40	17	45
	KHR-18LR	400	16	15	18	M26*1.5	82	48	12	-	40	17	50
	KHR-22LR	315	20	19	22	M30*2	101	60	14	-	56	24	60
	KHR-28LR	315	25	24	28	M36*2	108	64	14	-	63	29	68
	KHR-35LR	315	32	30	35	M42*2	141	72	16	-	75	34	87
	KHR-42LR	315	40	36	42	M52*2	162	80	16	-	86	40	95
SR 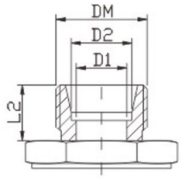	KHR-08SR	500	04	4	8	M14*1.5	73	40	12	-	32	13	35
	KHR-10SR	500	06	6	10	M16*1.5	73	40	12	-	32	13	35
	KHR-12SR	500	08	8	12	M18*1.5	76	42	12	-	40	17	42
	KHR-14SR	500	10	10	14	M22*1.5	80	42	14	-	40	17	42
	KHR-16SR	500	13	12	16	M24*1.5	86	48	14	-	40	17	45
	KHR-20SR	500	13	12	20	M30*2	90	48	16	-	40	17	45
	KHR-20SR	400	16	15	20	M30*2	90	48	16	-	45	19	50
	KHR-25SR	315	20	19	25	M36*2	109	60	18	-	56	24	60
	KHR-30SR	315	25	24	30	M42*2	120	64	20	-	63	29	68
	KHR-38SR	315	32	30	38	M52*2	153	72	22	-	75	34	87

KHB-3W Series (3-way Ball Valve)

KHB-3W

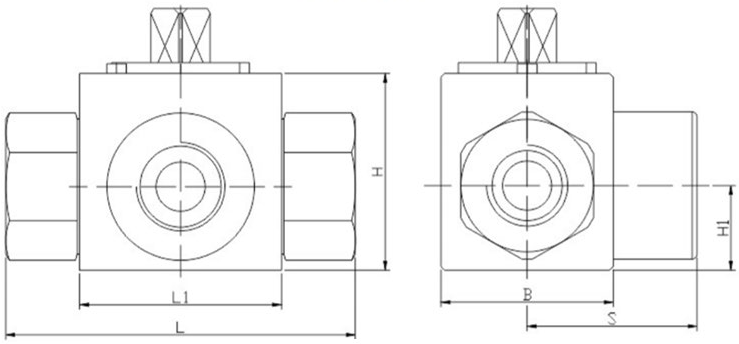

L Type

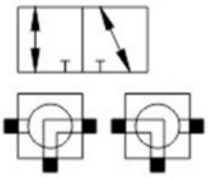

P Type

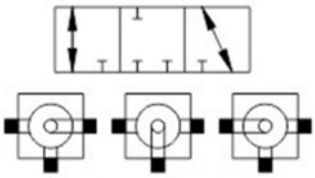

T-90° Type

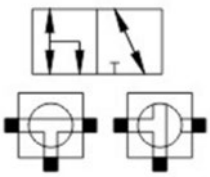

T-180° Type

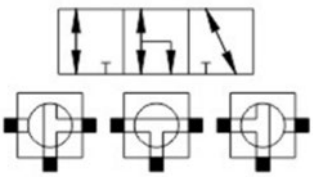

Dimensions

	Part NO.	PN	DN	Dimension(mm)										
				D1	D2	DM	L	L1	L2	L3	H1	H2	B	S
M 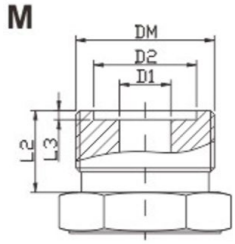	KHB-3W-M16	500	06	6	11	M16*1.5	69	40	11	1.4	32	13	26	35
	KHB-3W-M22	500	08	8	16	M22*1.5	76	42	12	1.8	40	17	34	36.5
	KHB-3W-M27	500	10	10	20	M27*1.5	76	42	12	1.8	40	17	34	36.5
	KHB-3W-M30	400	16	15	24	M30*1.5	84	48	13	1.8	45	19	38	42
	KHB-3W-M36	315	20	19	30	M36*2	103	60	15	2.4	56	24	48	52
	KHB-3W-M42	315	25	24	35	M42*2	116	64	18	2.4	63	29	58	59.5
	KHB-3W-M52	315	32	30	40	M52*2	149	72	20	2.4	75	34	69	75.5
	KHB-3W-M60	315	40	36	45	M60*2	174	80	22	2.4	86	40	80	82
G 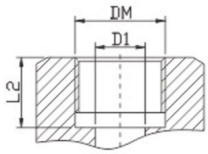	KHB-3W-FG2	500	04	4	-	G1/8	69	40	10	-	32	13	26	35
	KHB-3W-FG4	500	06	6	-	G1/4	69	40	14	-	32	13	26	35
	KHB-3W-FG6	500	10	10	-	G3/8	72	42	14	-	40	17	34	34.5
	KHB-3W-FG8	500	13	13	-	G1/2	83	48	16	-	40	17	34	40
	KHB-3W-FG8	400	16	15	-	G1/2	83	48	16	-	45	19	38	42
	KHB-3W-FG12	315	20	19	-	G3/4	95	60	18	-	56	24	48	49
	KHB-3W-FG16	315	25	24	-	G1	113	64	20	-	63	29	58	56
	KHB-3W-FG20	315	32	30	-	G11/4	110	72	22	-	75	34	68	58.5
	KHB-3W-FG24	315	40	38	-	G11/2	130	80	24	-	86	40	80	67.5
	KHB-3W-FG32	315	50	48	-	G2	140	96	26	-	104	48	99	70
NPT 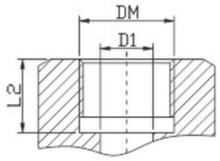	KHB-3W-FN2	500	04	4	-	NPT1/8	69	40	10	-	32	13	26	35
	KHB-3W-FN4	500	06	6	-	NPT1/4	69	40	14	-	32	13	26	35
	KHB-3W-FN6	500	10	10	-	NPT3/8	72	42	14	-	40	17	34	34.5
	KHB-3W-FN8	500	13	13	-	NPT1/2	83	48	16	-	40	17	34	40
	KHB-3W-FN8	400	16	15	-	NPT1/2	83	48	16	-	45	19	38	42
	KHB-3W-FN12	315	20	19	-	NPT3/4	95	60	18	-	56	24	48	49
	KHB-3W-FN16	315	25	24	-	NPT1	113	64	20	-	63	29	58	56
	KHB-3W-FN20	315	32	30	-	NPT11/4	110	72	22	-	75	34	68	58.5
	KHB-3W-FN24	315	40	38	-	NPT11/2	130	80	24	-	86	40	80	67.5
	KHB-3W-FN32	315	50	48	-	NPT2	140	96	26	-	104	48	99	70
LR 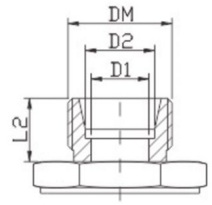	KHB-3W-06LR	500	04	4	6	M12*1.5	67	40	10	-	32	13	26	35
	KHB-3W-08LR	500	06	6	8	M14*1.5	67	40	10	-	32	13	26	35
	KHB-3W-10LR	500	08	8	10	M16*1.5	74	42	11	-	40	17	34	35.5
	KHB-3W-12LR	500	10	10	12	M18*1.5	74	42	11	-	40	17	34	35.5
	KHB-3W-15LR	500	13	12	15	M22*1.5	82	48	12	-	40	17	34	40
	KHB-3W-18LR	400	16	15	18	M26*1.5	82	48	12	-	40	17	34	42
	KHB-3W-22LR	315	20	19	22	M30*2	101	60	14	-	56	24	48	42
	KHB-3W-28LR	315	25	24	28	M36*2	108	64	14	-	63	29	58	52
	KHB-3W-35LR	315	32	30	35	M42*2	141	72	16	-	75	34	68	53.5
	KHB-3W-42LR	315	40	36	42	M52*2	162	80	16	-	86	40	80	56

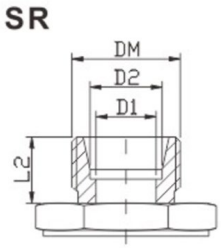

Part NO.	PN	DN	Dimension(mm)										
			D1	D2	DM	L	L1	L2	L3	H1	H2	B	S
KHB-3W-08SR	500	04	4	8	M14*1.5	73	40	12	-	32	13	26	37
KHB-3W-10SR	500	06	6	10	M16*1.5	73	40	12	-	32	13	26	37
KHB-3W-12SR	500	08	8	12	M18*1.5	76	42	12	-	40	17	34	37.5
KHB-3W-14SR	500	10	10	14	M22*1.5	80	42	14	-	40	17	34	38.5
KHB-3W-16SR	500	13	12	16	M24*1.5	86	48	14	-	40	17	34	43.5
KHB-3W-20SR	500	13	12	20	M30*2	90	48	16	-	40	17	34	45.5
KHB-3W-20SR	400	16	15	20	M30*2	90	48	16	-	45	19	38	45.5
KHB-3W-25SR	315	20	19	25	M36*2	109	60	18	-	56	24	48	56
KHB-3W-30SR	315	25	24	30	M42*2	120	64	20	-	63	29	58	59.5
KHB-3W-38SR	315	32	30	38	M52*2	153	72	22	-	75	34	68	63

KHB Series with Linkage Handle

When ordering, please add (2×) before the Part NO.. For example, 2×KHB-FG8

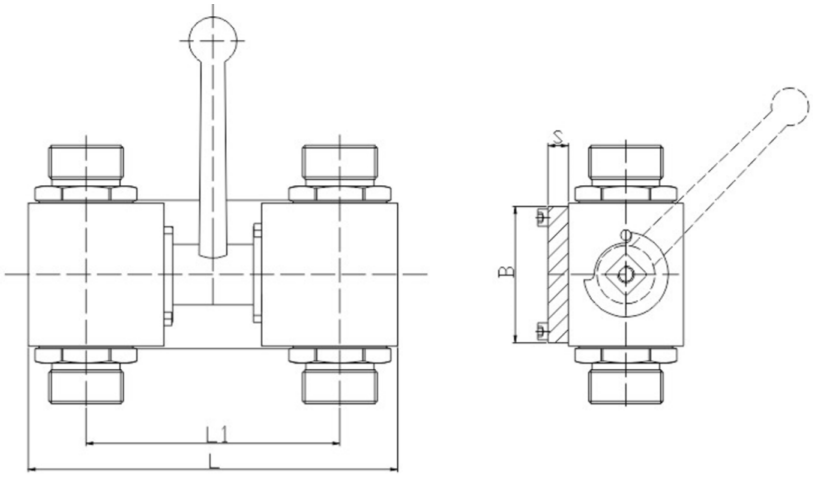

KHB-3W Series with Linkage Handle

When ordering, please add (2×) before the Part NO.. For example, 2×KHB-FG8

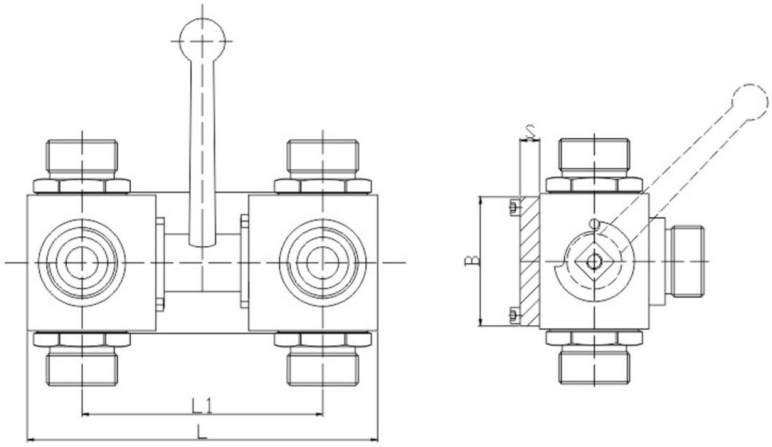

Dimensions

DN	L	L1	B	S
8	85	59	35	6
10	95	63	40	6
13	100	65	45	6
16	126	86	45	8
20	135	86	60	10
25	173	120	65	10

Ball Valve with Mounting hole

When ordering, please explain or consult Astomi sales.

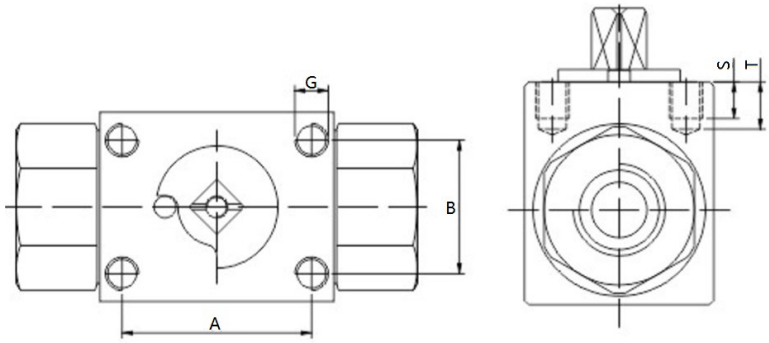

DN	A	B	G	S	T
4-6	26	18	M5	6	8.5
8-10	34	24	M6	8	11
13	34	24	M6	8	11
16	34	24	M6	8	11
20	45	38	M6	8	11
25	45	38	M6	8	11

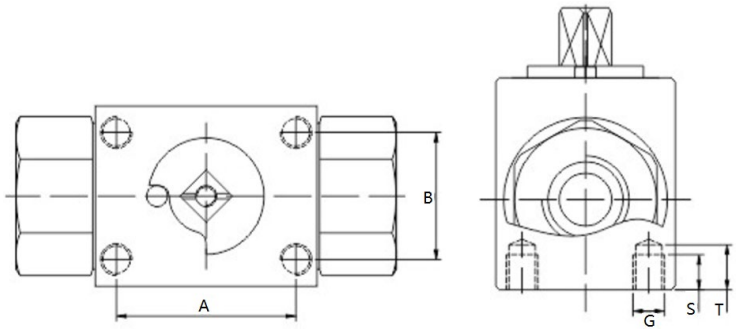

DN	A	B	G	S	T
4-6	24	20	M5	6	-
8-10	34	24	M5	6.5	7.5
13	38	27	M6	6.5	7.5
16	38	27	M6	6.5	7.5
20	51	39	M6	8	11
25	52	48	M6	8	11

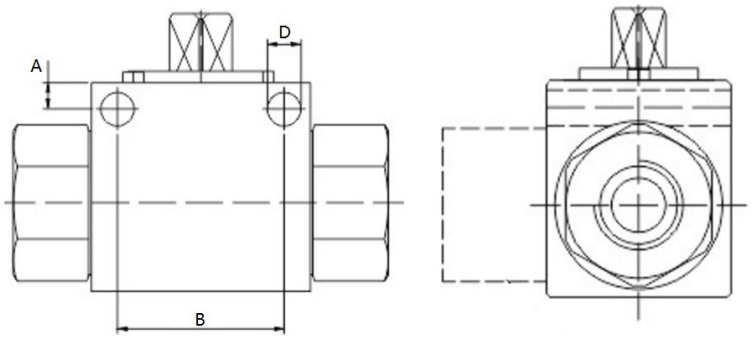

DN	A	B	D	-	-
4-6	4.8	31.5	4.5	-	-
8-10	5	31.5	6.5	-	-
13	6	38.5	6.5	-	-
16	6	38.5	6.5	-	-
20	6	48.5	6.5	-	-
25	7	50.5	8.5	-	-

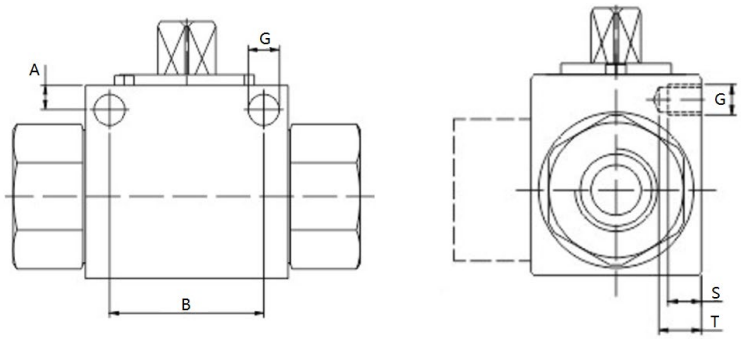

DN	A	B	G	S	T
4-6	4.8	31.5	M5	6.5	9
8-10	5	31.5	M5	7	10
13	6	38.5	M6	7	10
16	6	38.5	M6	7	10
20	6	48.5	M6	10	13
25	7	50.5	M6	10	13

KHBS Series (SAE Flange Ball Valve)

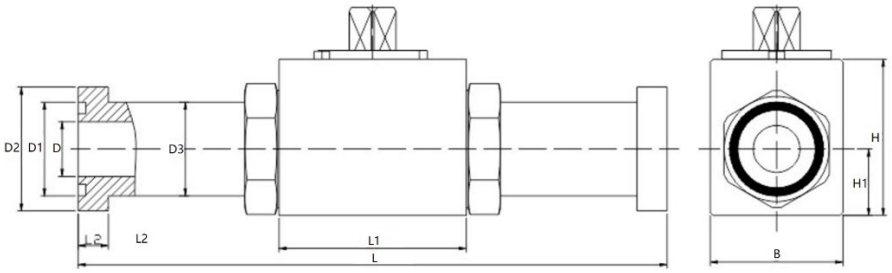

3000 PSI

Part NO.	Flange Size	DN	Dimension(mm)										
			D	D1	D2	D3	L	L1	L2	B	H	H1	O-RING
KHBS-F3-13	1/2″	13	13	25.4	30.2	24	151	48	6.7	34	40	17	18.7*3.53
KHBS-F3-20	3/4″	20	19	31.8	38.1	32	162	60	6.7	48	56	24	25.0*3.53
KHBS-F3-25	1″	25	24	39.6	44.4	38	178	64	8	58	63	29	32.9*3.53
KHBS-F3-32	1.1/4″	32	30	44.5	50.8	43	190.5	72	8	68	75	34	37.7*3.53
KHBS-F3-40	1.1/2″	40	38	53.7	60.3	50	231	80	8	80	86	40	47.2*3.53
KHBS-F3-50	2″	50	46	63.3	71.4	62	232	96	9.5	96	102	48	56.7*3.53

6000 PSI

Part NO.	Flange Size	DN	Dimension(mm)										
			D	D1	D2	D3	L	L1	L2	B	H	H1	O-RING
KHBS-F6-13	1/2″	13	13	25.4	31.7	24	151	48	7.7	34	40	17	18.7*3.53
KHBS-F6-20	3/4″	20	19	31.8	41.3	32	174	60	8.8	48	56	24	25.0*3.53
KHBS-F6-25	1″	25	24	39.6	47.6	38	198	64	9.5	58	63	29	32.9*3.53
KHBS-F6-32	1.1/4″	32	30	44.5	54	44	223	72	10.3	68	75	34	37.7*3.53
KHBS-F6-40	1.1/2″	40	38	53.7	63.5	51	281	80	12.6	80	86	40	47.2*3.53
KHBS-F6-50	2″	50	46	63.3	79.4	67	316	96	12.6	96	102	48	56.7*3.53

KHBG Series (SAE Flange Ball Valve)

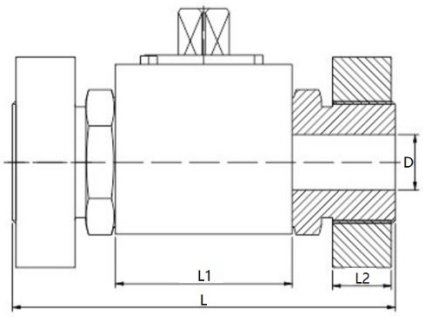

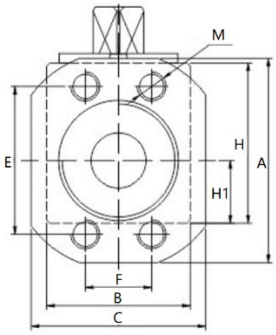

3000 PSI

Part NO.	Flange Size	DN	Dimension(mm)											
			D	L	L1	L2	E	F	B	H	A	C	H1	M
KHBG-F3-13	1/2″	15	15	104	48	15	38.1	17.5	38	46	54	46	19	M8
KHBG-F3-20	3/4″	20	19	121	60	18	47.6	22.3	48	56	65	52	24	M10
KHBG-F3-25	1″	25	24	133	64	18	52.4	26.2	58	63	70	59	29	M10
KHBG-F3-32	1.1/4″	32	30	163	72	18	58.7	30.2	68	75	79	73	34	M10
KHBG-F3-40	1.1/2″	40	38	168	80	18	69.9	35.6	80	86	94	83	40	M12
KHBG-F3-50	2″	50	46	186	96	25	77.8	42.9	96	102	102	97	48	M12
KHBG-F3-65/50	2.1/2″	50	46	174	96	25	88.9	50.8	96	102	114	109	48	M12

6000 PSI

Part NO.	Flange Size	DN	Dimension(mm)											
			D	L	L1	L2	E	F	B	H	A	C	H1	M
KHBG-F6-13	1/2″	15	15	104	48	16	40.5	18.2	38	46	56	48	19	M8
KHBG-F6-20	3/4″	20	19	121	60	18	50.8	23.8	48	56	71	60	24	M10
KHBG-F6-25	1″	25	24	133	64	24	57.2	27.8	58	63	81	70	29	M12
KHBG-F6-32	1.1/4″	32	30	163	72	26	66.6	31.8	68	75	95	78	34	M14
KHBG-F6-40	1.1/2″	40	38	168	80	28	79.3	36.5	80	86	113	95	40	M16
KHBG-F6-50	2″	50	46	186	96	30	96.8	44.5	96	102	133	114	48	M20

KHSA Series (SAE Flange Ball Valve)

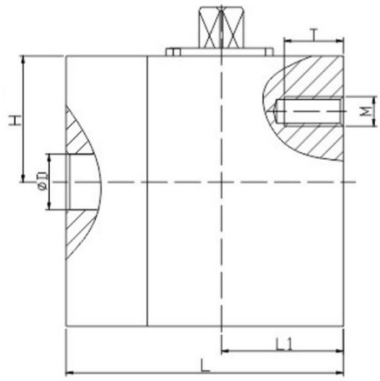

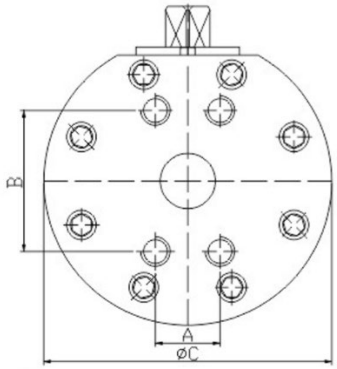

3000 PSI

Part NO.	Flange Size	DN	Dimension(mm)								
			D	L	L1	H	A	B	C	M	T
KHBG-F3-13	1/2″	15	15	75	33	31	17.5	38.1	78	M8	16
KHBG-F3-20	3/4″	20	19	80	35	37	22.2	47.6	98	M10	18
KHBG-F3-25	1″	25	24	88	38	39.5	26.2	52.4	117	M10	18
KHBG-F3-32	1.1/4″	32	30	100	50	68	30.2	58.7	145	M12	20
KHBG-F3-40	1.1/2″	40	38	110	55	78	35.7	69.8	165	M12	20
KHBG-F3-50	2″	50	46	116	58	94	42.9	77.8	197	M12	20
KHBG-F3-65	2.1/2″	65	60	150	75	94	50.8	88.9	197	M12	20
KHSA-F3-80	3″	80	70	160	80	98	61.9	106.4	207	M16	24
KHSA-F3-100	4″	100	95	170	85	121	77.8	130.2	257	M16	24
KHSA-F3-125	5″	125	118	210	105	140	92.1	152.4	295	M16	30

6000 PSI

Part NO.	Flange Size	DN	Dimension(mm)								
			D	L	L1	H	A	B	C	M	T
KHBG-F6-13	1/2″	15	15	75	33	31	18.2	40.5	78	M8	16
KHBG-F6-20	3/4″	20	19	80	35	37	23.8	50.8	98	M10	18
KHBG-F6-25	1″	25	24	88	38	39.5	27.8	57.2	117	M12	20
KHBG-F6-32	1.1/4″	32	30	100	50	68	31.8	66.7	145	M14	22
KHBG-F6-40	1.1/2″	40	38	110	55	78	36.5	79.4	165	M16	24
KHBG-F6-50	2″	50	46	116	58	94	44.5	96.8	197	M20	28

BEH Series (SAE Flange Ball Valve)

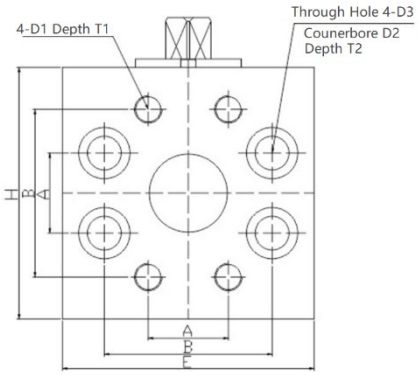

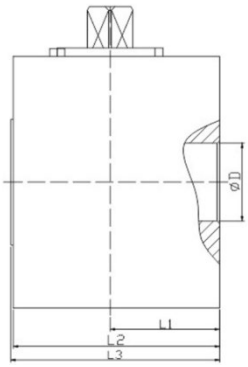

3000 PSI

Part NO.	Flange Size	DN	Dimension(mm)												
			D	L1	L2	L3	A	B	H	E	D1	T1	D2	T1	D3
BEH-F3-32	1.1/4″	32	31	43.5	82	83	31.8	66.6	100	100	1/2-13UNC	25	20.5	17.5	13.5
BEH-F3-40	1.1/2″	40	38	53.5	99	100	36.5	79.3	120	120	5/8-11UNC	36	26	21.5	16.5
BEH-F3-50	2″	50	48	61	110	111	44.5	96.8	124	134	3/4-10UNC	36	30.5	25	20.5

KHBF Series (Flange Ball Valve)

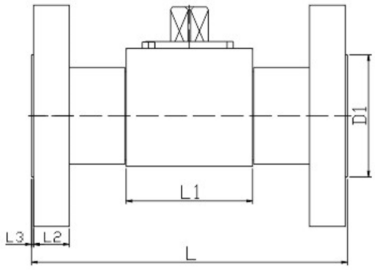

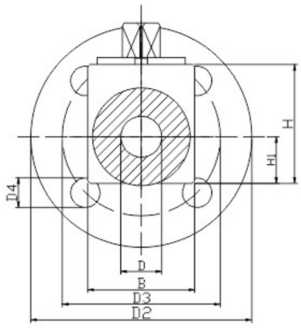

Part NO.	Working Pressure	DN	Dimension(mm)											
			D	L	L1	L2	L3	D1	D2	D3	D4	H	H1	B
KHBF-16	40	15	15	130	48	16	1	45	95	65	14	46	19	38
	160					20			105	75	14			
	315					26			128	90	18			
KHBF-20	40	20	19	150	60	18	1	58	105	75	14	56	24	48
KHBF-25	40	25	24	160	64	18	2	65	115	85	14	63	58	29
	160					24			138	100	18			
	250					28			148	105	22			
	315					34			158	115	22			
KHBF-32	40	32	30	180	72	18	2	78	138	100	18	75	68	34
	160					26			155	110	22			
KHBF-40	40	40	38	200	80	18	3	88	148	110	18	86	80	40
	160					28			168	125	22			
	250					34			185	135	26			
	315					38			195	145	26			
KHBF-50	40	50	46	230	96	20	3	102	165	125	18	102	96	48
	63					26			178	135	22			
	160					30			195	145	26			
	250					38			198	150	26			
	315					42			208	160	26			

KHP Series (Plate Type Ball Valve)

2-way

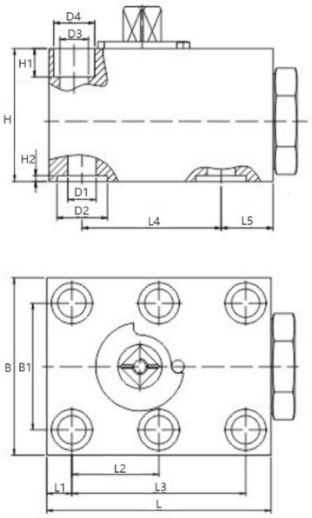

3-way

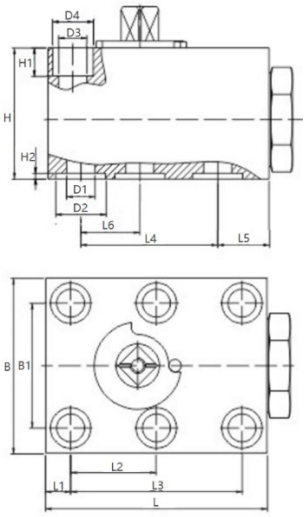

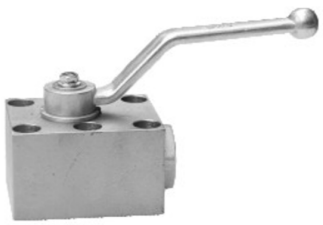

Part NO.	DN	Dimension(mm)															
		L	L1	L2	L3	L4	L5	L6	D1	D2	D3	D4	B	B1	H	H1	H2
KHP-06	6	59	8.5	17.5	35	35	15.5	17.5	6	11	6.5	11	42	27	38	7	1.3
KHP-10	10	71	8	27.5	55	44	16.5	19	10	16	9	13	56	40	42	9	1.8
KHP-16	16	100	8.5	41.5	83	58	25	26.5	15	25	9	13	63	45	50	9	1.8
KHP-20	20	117	10	48.5	97	69	28	32	19	30	11	16.5	71	51	60	10.5	2
KHP-25	25	137	11	57.5	115	81	31	38	24	35	11	16.5	82	60	67	10.5	2
KHP -32	32	165	12	68	136	96	40	46	30	40	13	19	102	78	75	13	2.4
KHP-40	40	180	28.5	56	112	112	39.5	56	38	50	17	26	130	95	85	17	2.4
KHP-50	50	220	38	68	136	136	46	68	46	56	22	33	150	112	105	22	2.7

3KH/4KH Series (3-way/4way Ball Valve)

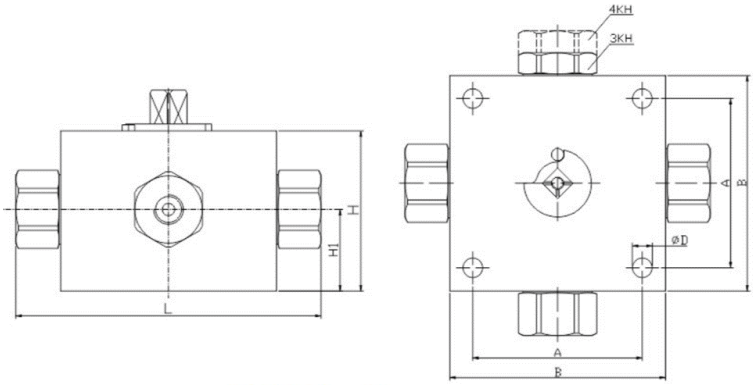

3KH Sereis

L Type 9-90°

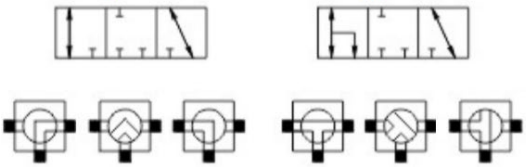

T Type 9-90°

4KH Series

T Type 9-90°

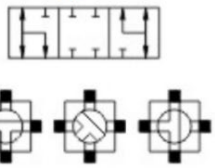

X Type 9-90°

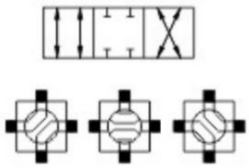

G

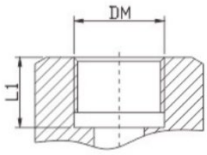

Part NO.	PN	DN	Dimension(mm)							
			DM	L	H	H1	A	B	D	L1
3KH/4KH-FG2	500	04	G1/8	100	52	26.5	55	70	6.5	13
3KH/4KH-FG4	500	06	G1/4	100	55	28	65	80	6.5	13
3KH/4KH-FG6	500	10	G3/8	115	55	28	65	80	6.5	13
3KH/4KH-FG8	500	13	G1/2	135	60	30	80	99	8.7	15
3KH/4KH-FG12	315	20	G3/4	148	71	37	85	112	8.7	17
3KH/4KH-FG16	315	25	G1	172	79	42.5	105	124	11	19
3KH/4KH-FG20	315	32	G11/4	180	79	42.5	105	124	11	20
3KH/4KH-FG24	315	40	G11/2	230	107	57.5	150	198	14.5	24

NPT

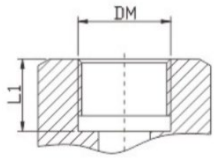

Part NO.	PN	DN	Dimension(mm)							
			DM	L	H	H1	A	B	D	L1
3KH/4KH-FN2	500	04	NPT1/8	105	52	26.5	55	70	6.5	12
3KH/4KH-FN4	500	06	NPT1/4	105	55	28	65	80	6.5	17
3KH/4KH-FN6	500	10	NPT3/8	115	55	28	65	80	6.5	17
3KH/4KH-FN8	500	13	NPT1/2	140	60	30	80	99	8.7	22
3KH/4KH-FN12	315	20	NPT3/4	154	71	37	85	112	8.7	23
3KH/4KH-FN16	315	25	NPT1	183	79	42.5	105	124	11	27
3KH/4KH-FN20	315	32	NPT11/4	190	79	42.5	105	124	11	28
3KH/4KH-FN24	315	40	NPT11/2	236	107	57.5	150	198	14.5	33

LR

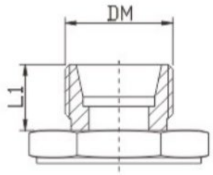

Part NO.	PN	DN	Dimension(mm)							
			DM	L	H	H1	A	B	D	L1
3KH/4KH-06LR	500	04	M12*1.5	105	52	26.5	55	70	6.5	7
3KH/4KH-08LR	500	06	M14*1.5	105	55	28	65	80	6.5	7
3KH/4KH-10LR	500	08	M16*1.5	114	55	28	65	80	6.5	8
3KH/4KH-12LR	500	10	M18*1.5	114	55	28	65	80	6.5	8
3KH/4KH-15LR	315	13	M22*1.5	136	60	30	80	99	8.7	9
3KH/4KH-18LR	315	13	M26*1.5	136	60	30	80	99	8.7	9
3KH/4KH-22LR	315	20	M30*2	152	71	37	85	112	8.7	11
3KH/4KH-28LR	315	25	M36*2	170	79	42.5	105	124	11	11
3KH/4KH-35LR	315	25	M45*2	174	79	42.5	105	124	11	13
3KH/4KH-42LR	315	40	M52*2	246	107	57.5	150	198	14.5	13

SR

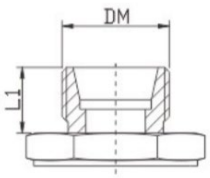

Part NO.	PN	DN	Dimension(mm)							
			DM	L	H	H1	A	B	D	L1
3KH/4KH-08SR	500	04	M16*1.5	105	52	26.5	55	70	6.5	9
3KH/4KH-10SR	500	06	M18*1.5	105	55	28	65	80	6.5	9
3KH/4KH-12SR	500	08	M20*1.5	116	55	28	65	80	6.5	9
3KH/4KH-14SR	315	10	M22*1.5	121	55	28	65	80	6.5	11
3KH/4KH-16SR	315	13	M24*1.5	140	60	30	80	99	8.7	11
3KH/4KH-20SR	315	13	M30*2	144	60	30	80	99	8.7	13
3KH/4KH-25SR	315	20	M36*2	162	71	37	85	112	8.7	15
3KH/4KH-30SR	315	25	M42*2	180	79	42.5	105	124	11	15
3KH/4KH-38SR	315	25	M52*2	184	79	42.5	105	124	11	17

CJZQ Series Ball Valve

L Type: Male Thread

G Type: Female Thread

F Type: Flange

Dimensions

L

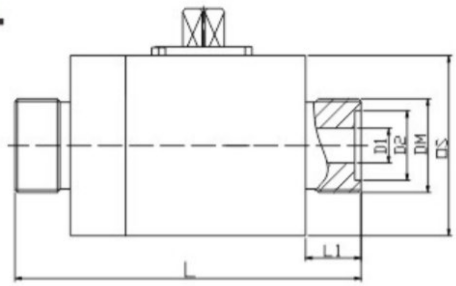

Part NO.	PN	DN	Dimension(mm)					
			DM	L	L1	D1	D2	□S
CJZQ-L6H	315	6	M16*1.5	81	12	6	11	40
CJZQ-L8H	315	8	M22*1.5	86	14	8	16	40
CJZQ-L10H	315	10	M27*1.5	100	16	10	20	52
CJZQ-L15H	315	15	M30*1.5	105	18	15	25	52
CJZQ-L20H	315	20	M36*2	121	20	20	30	64
CJZQ-L25H	315	25	M42*2	135	22	24	35	70
CJZQ-L32H	315	32	M52*2	160	24	30	40	83
CJZQ-L40H	315	40	M60*2	180	26	38	50	94
CJZQ-L50H	315	50	M72*2	205	28	48	60	110

G

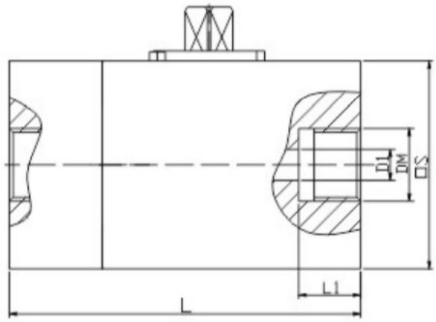

Part NO.	PN	DN	Dimension(mm)					
			DM	L	L1	D1	D2	□S
CJZQ-G6H	315	6	M14*1.5	68	12	6	11	40
CJZQ-G8H	315	8	M16*1.5	70	14	8	16	40
CJZQ-G10H	315	10	M18*1.5	88	16	10	20	52
CJZQ-G15H	315	15	M27*1.5	91	18	15	25	52
CJZQ-G20H	315	20	M33*2	100	20	20	30	64
CJZQ-G25H	315	25	M42*2	111	22	24	35	70
CJZQ-G32H	315	32	M48*2	131	24	30	40	83

F

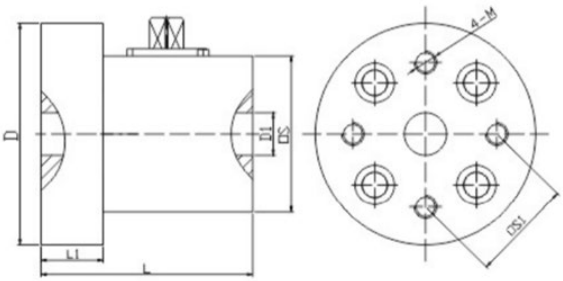

Part NO.	PN	DN	Dimension(mm)					
			M	L	L1	D	D1	□S
CJZQ-F10H	200	10	M8	70	22	73	10	52
CJZQ-F15H	200	15	M8	75	22	78	15	52
CJZQ-F20H	200	20	M10	85	22	88	20	64
CJZQ-F25H	200	25	M12	96	28	98	24	70
CJZQ-F32H	200	32	M14	106	28	113	30	83
CJZQ-F40H	200	40	M16	125	36	130	38	94
CJZQ-F50H	200	50	M20	146	36	156	48	110
CJZQ-F65H	200	65	M22	170	45	178	60	134
CJZQ-F80H	200	80	M24	185	45	218	70	169

QINS Series Ball Valve

L Type: Male Thread

G Type: Female Thread

F Type: Flange

-H1: 100 bar

-H2: 200 bar

-H3: 315 bar

Dimensions

L

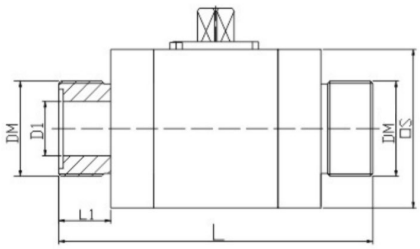

Part NO.	PN	DN	Dimension(mm)				
			DM	L	L1	D1	□S
QINS-L10-H3	315	10	M18*1.5	106	18	10	52
QINS-L20-H3	315	20	M27*2	125	20	20	64
QINS-L25-H3	315	25	M42*2	139	23	24	70
QINS-L32-H3	315	32	M60*2	164	30	32	83
QINS-L40-H3	315	40	M60*2	180	38	38	94

G

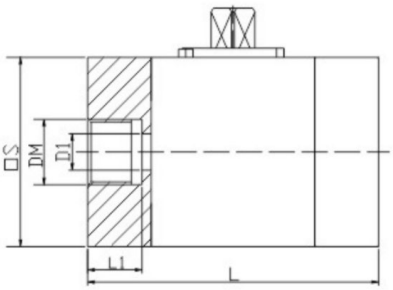

Part NO.	PN	DN	Dimension(mm)				
			DM	L	L1	D1	□S
QINS-G10-H3	315	10	M18*1.5	80	15	10	52
QINS-G15-H3	315	15	M22*1.5	90	18	15	55
QINS-G20-H3	315	20	M27*2	100	20	20	64
QINS-G25-H3	315	25	M32*2	110	22	24	70
QINS-G32-H3	315	32	M42*2	120	24	32	83
QINS-G40-H3	315	40	M48*2	135	26	38	94

F

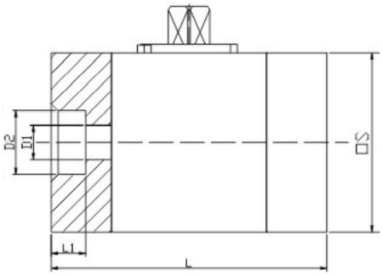

Part NO.	PN	DN	Dimension(mm)				
			L	L1	D1	D2	□S
QINS-F10-H3	315	10	80	10	10	18.5	52
QINS-F15-H3	315	15	90	11	15	22.5	55
QINS-F20-H3	315	20	100	12	20	28.5	64
QINS-F25-H3	315	25	106	14	24	33.5	70
QINS-F32-H3	315	32	120	16	30	43	83
QINS-F40-H3	315	40	135	18	38	52	94
QINS-F50-H3	315	50	148	20	48	65	116

JZQ Series Ball Valve

L Type: Male Thread

G Type: Female Thread

F Type: Flange Type

P Tupe: Paltes Type

H2: 200 bar

H3: 315 bar

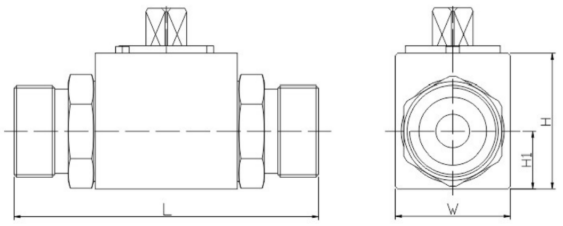

L

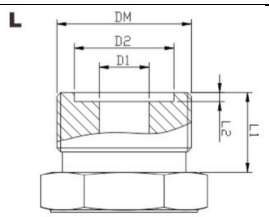

PART NO.	PN	DN	DM	L	L1	L2	H	H1	W	D1	D2
JZQ-L6-H3	315	6	M16*1.5	80	12	1.3	32	13	26	6	11
JZQ-L10-H3	315	10	M22*1.5	80	12	1.8	40	17	34	10	16
JZQ-L15-H3	315	15	M30*1.5	91	14	2	46	19	38	15	22
JZQ-L20-H3	315	20	M36*2	108	16.5	2	56	24	48	18	28
JZQ-L25-H3	315	25	M42*2	126	20	2	63	29	58	22	35
JZQ-L32-H3	315	32	M52*2	144	22	2.4	75	34	68	30	40
JZQ-L40-H3	315	40	M60*2	160	24	2.4	86	40	80	36	50

G

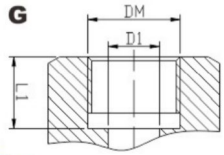

PART NO.	PN	DN	DM	L	L1	H	H1	W	D1
JZQ-G6-H3	315	6	M16*1.5	80	12	32	13	26	6
JZQ-G10-H3	315	10	M18*1.5	80	14	40	17	34	10
JZQ-G15-H3	315	15	M27*2	91	16	46	19	38	15
JZQ-G20-H3	315	20	M33*2	98	16	56	24	48	18
JZQ-G25-H3	315	25	M42*2	114	20	63	29	58	22
JZQ-G32-H3	315	32	M48*2	128	22	75	34	68	30
JZQ-G40-H3	315	40	M48*2	135	24	86	40	80	36

F

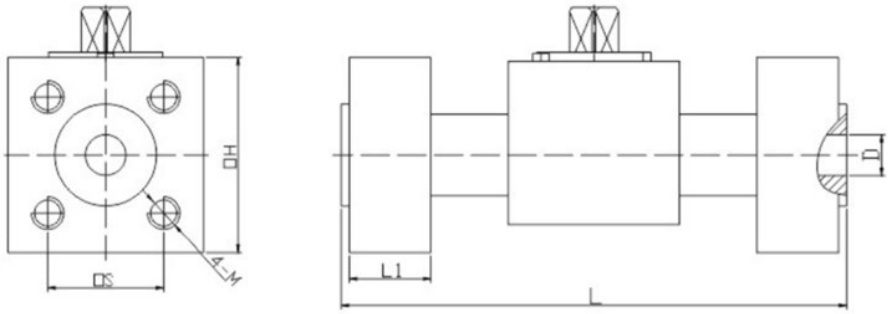

PART NO.	PN	DN	L	L1	□H	□S	M	D
JZQ-F10-H2	200	10	124	20	48	28.5	M6	10
JZQ-F15-H2	200	15	141	20	53	35.4	M8	15
JZQ-F20-H2	200	20	149	20	65	43.8	M10	10
JZQ-F25-H2	200	25	160	25	77	51.6	M12	24
JZQ-F32-H2	200	32	180	25	88	60.1	M14	30
JZQ-F40-H2	200	40	202	30	100	69.3	M16	38
JZQ-F50-H2	200	50	241	36	125	86	M18	48
JZQ-F65-H3	200	65	280	45	148	105	M22	60

B

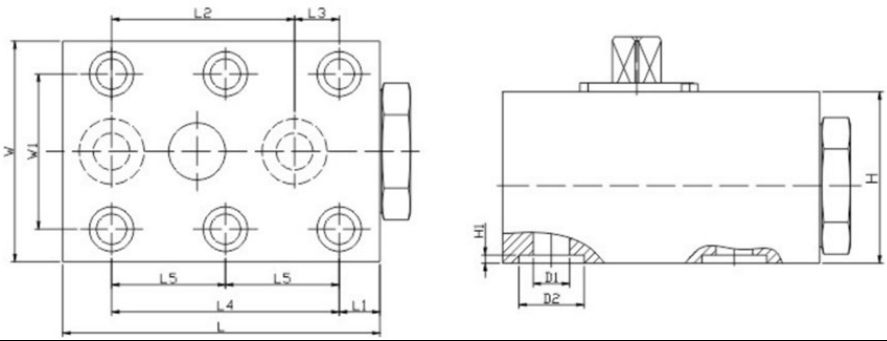

PART NO.	PN	DN	L	L1	L2	L3	L4	L5	W	W1	H	H1	D1	D2	M
JZQ-P06-H2	200	6	59	15.5	35	-	35	-	42	27	38	1.3	6	11	M6
JZQ-P10-H2	200	10	71	8	44	8.5	55	-	56	40	42	1.8	10	16	M8
JZQ-P15-H2	200	15	100	8.5	58	16.5	83	41.5	62	45	42	1.8	15	25	M8
JZQ-P20-H2	200	20	119	11	69	18	97	48.5	72	51	56	2.2	20	30	M10
JZQ-P25-H2	200	25	135	10	81	20	115	57.5	80	60	63	.2.	24	35	M10
JZQ-P32-H2	200	32	165	17	96	23	136	68	100	78	7	2.4	30	40	M12
JZQ-P40-H2	200	40	190	49.5	112	-	112	56	130	95	86	2.4	38	50	M16
JZQ-P50-H2	200	50	230	56	136	-	136	68	150	112	102	2.4	48	60	M20
JZQ-P65-H3	200	65	275	65	166	-	166	83	175	133	132	2.4	60	75	M24

KJ Series (Ball Valve for Coal Mine)

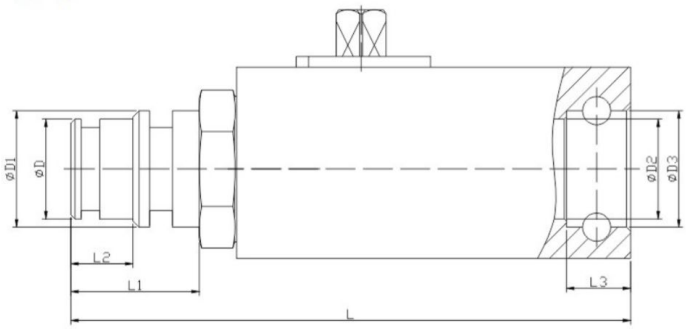

Part NO.	PN	DN	Dimension(mm)							
			L	L1	L2	L3	D	D1	D2	D3
KJ-10	500	10	110	26	10	16	15	18	15	18
KJ-13	500	13	110	26	12	14	18	20	18	20
KJ-16	315	16	125	30	14	16	20	25	20	25
KJ-20	315	20	125	31	15	16	24	28	24	28
KJ-25	315	25	136	31	15	16	30	35	30	35
KJ-32	315	32	151	31	15	16	37	42	37	42

ZK-KBV Series (Ball Valve for Coal Mine)

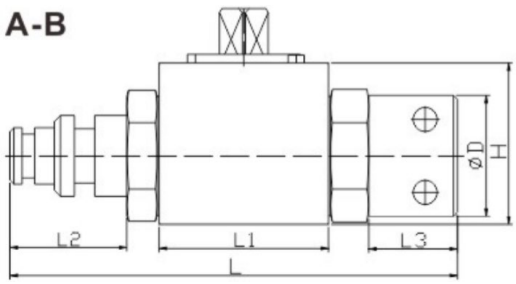

Part NO.	PN	DN	Dimension(mm)					
			L	L1	L2	L3	D	H
ZK-KBV-06-AB	500	06	104	40	28	24	24	32
ZK-KBV-10-AB	500	10	111	42	29	24	30	40
ZK-KBV-12-AB	500	13	112	48	29	25	35	40
ZK-KBV-20-AB	315	20	125	60	29	23	41	56
ZK-KBV-25-AB	315	25	144	64	35	28	53	63
ZK-KBV-32-AB	315	32	167	72	35	24	60	75

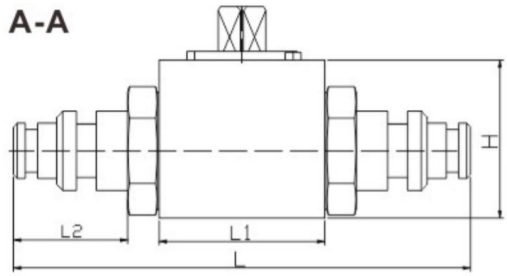

Part NO.	PN	DN	Dimension(mm)					
			L	L1	L2	L3	D	H
ZK-KBV-06-AA	500	06	109	40	28	-	-	32
ZK-KBV-10-AA	500	10	116	42	29	-	-	40
ZK-KBV-12-AA	500	13	116	48	29	-	-	40
ZK-KBV-20-AA	315	20	131	60	29	-	-	56
ZK-KBV-25-AA	315	25	151	64	35	-	-	63
ZK-KBV-32-AA	315	32	178	72	35	-	-	75

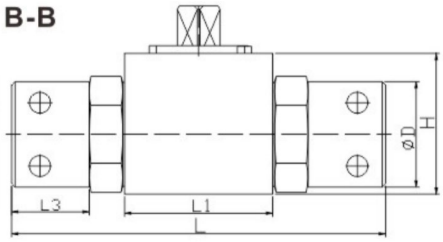

Part NO.	PN	DN	Dimension(mm)					
			L	L1	L2	L3	D	H
ZK-KBV-06-BB	500	06	99	40	-	24	24	32
ZK-KBV-10-BB	500	10	106	42	-	24	30	40
ZK-KBV-12-BB	500	13	106	48	-	25	35	40
ZK-KBV-20-BB	315	20	119	60	-	23	41	56
ZK-KBV-25-BB	315	25	137	64	-	28	53	63
ZK-KBV-32-BB	315	32	156	72	-	24	60	75

ZK-CV Series (Ball Valve for Broken Pipe)

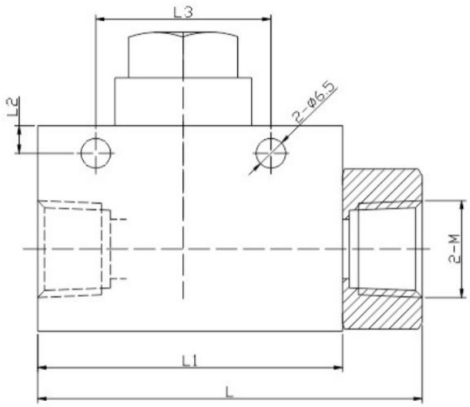

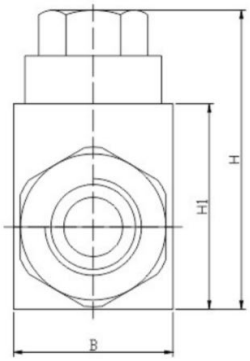

Part NO.	PN	DN	Dimension(mm)							
			L	L1	L2	L3	B	H	H1	M
ZK-CV-1/2	500	13	84.5	67	6	38.5	35	45	65.5	PT1/2″
ZK-CV-3/4	400	13	89	67	6	38.5	35	45	65.5	PT3/4
ZK-CV-1	315	25	120	95	6	48.5	50	58	83.5	PT1″

KBKH Series Ball Valve

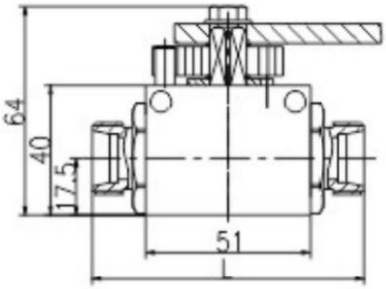

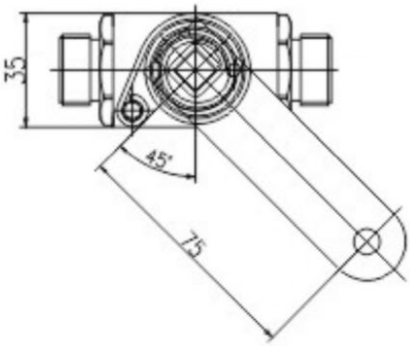

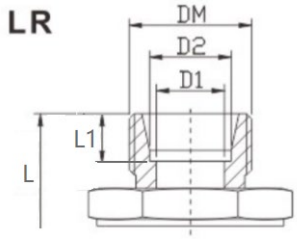

Part NO.	PN	DN	DW	D1	D2	L	L1
HBKH-06L	400	04	M12*1.5	4	6	84	7.5
HBKH-08L	400	06	M14*1.5	6	8	84	7.5
HBKH-10L	400	08	M16*1.5	8	10	84	8.5
HBKH-12L	400	10	M18*1.5	10	12	84	8.5
HBKH-15L	400	13	M22*1.5	12	15	84	9.5
HBKH-18L	400	13	M26*1.5	12	18	84	9.5

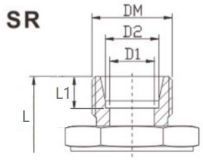

Part NO.	PN	DN	DW	D1	D2	L	L1
HBKH-10S	400	06	M18*1.5	8	10	86	9.5
HBKH-12S	400	08	M20*1.5	10	12	86	9.5
HBKH-16S	400	13	M24*1.5	10	16	90	11.5

Mounting Holes on the Side

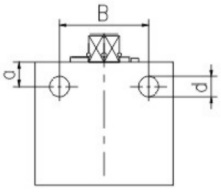

Standard Hole				Extension Hole			
DN	B	a	d	DN	B	a	d
13	37.5	4.8	6.5	13	41.5	4.8	6.5

PBV Series (Pneumatic Ball Valve)

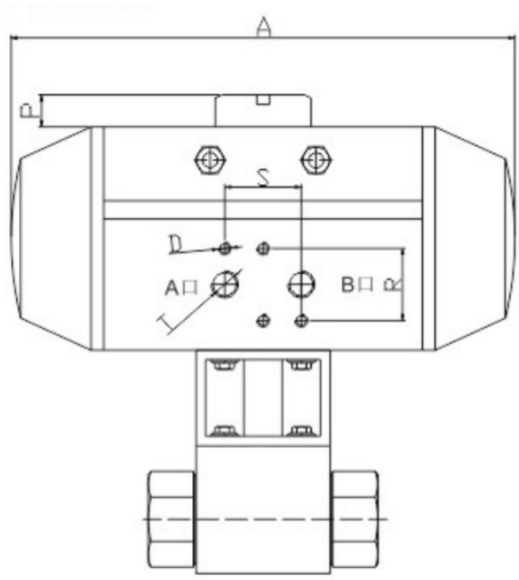

Selection table of pneumatic actuator

Part NO.	Torque Nm (5 bar)	Valve DN	Dimension(mm)					
			A	P	R	S	T	D
RAT032DA	7.5	DN4-5	109	20	32	24	G1/4	M5*8
RAT032DA	20.8	DN6-8	163.5	25.5	32	24	G1/4	M5*8
RAT032DA	36.6	DN10-13	181	30.4	32	24	G1/4	M5*8
RAT032DA	58.8	DN16-20	207	25.5	32	24	G1/4	M5*8
RAT032DA	113.7	DN25	258	25.5	32	24	G1/4	M5*8
RAT032DA	169.6	DN32	287	25.5	32	24	G1/4	M5*8
RAT032DA	291.5	DN40	312.5	25.6	32	24	G1/4	M5*8
RAT032DA	438.7	DN50-80	411	25.7	32	24	G1/4	M5*8
RAT032DA	668.5	DN100	488	25.8	32	24	G1/4	M5*8

EBV Series (Electric Ball Valve)

Electric Ball Valve is composed of ball valve and electric actuator. It is suitable for pressure below 500bar and can be controlled remotely.

Electric ball valve generally uses AC 220V, AC 380V,DC 24V voltage as power, receives 4-20mA or 0-10Ma current signal, and controls the ball valve to rotate 9-90 ° to complete the opening and closing of the ball valve.

When ordering, please select the ball valve model and inform the voltage and current.

Needle Valves

Contents

Integral Bonnet Needle Valves

BN Series: Maximum working pressure 3000 psig

BNH Series: Maximum working pressure 5000 psig

Features

- One-piece forged body.
- Easy external adjustments by packing nut.
- Compact design.
- Handle color options are available.
- Leak-tight performance testing for every valve with nitrogen at the maximum working pressure.
- Maximum working pressure:
  BN Series—Stainless steel: 3000 psig (207 bar)
  BNH Series—Stainless steel: 5000 psig (345 bar)
- Working temperature:
  PTFE: -65°F to 450°F (-54°C to 232°C)
  PEEK: -65°F to 500°F (-54°C to 260°C)

Standard Materials of Construction

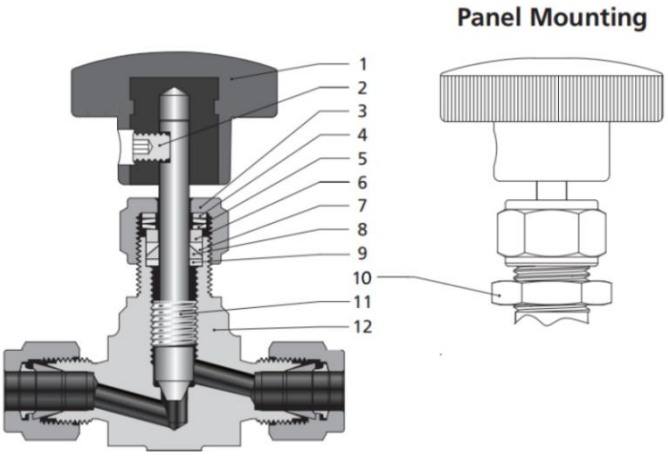

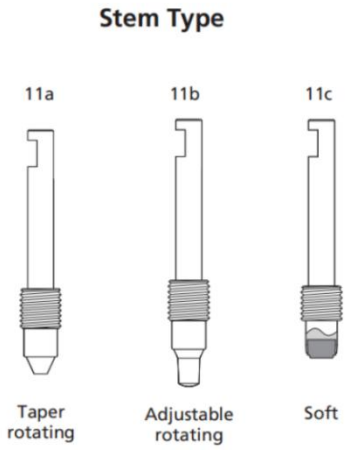

Item	Component	Valve Body Material		
		316 SS	Brass	Steel
1	Handle	Anodized aluminum or stainless steel or black knob		
2	Set Screw	Stainless steel		
3	Packing Bolt	304 SS/A276	Brass C36000/B16	Alloy 400/B164
4	Washer	316 SS/A276		
5	Packing Spring	S17700/A693		
6	Washer	316 SS/A276		
7	Upper Packing	PTFE/PEEK		
8	Lower Packing			
9	Packing Washer	316 SS/A276		
10	Panel Nut	17-4PH		
11a	Stem	Chrome-plated 316 SS/A276		
11b	Stem	PCTFE/D1430	PEEK	
11c	Stem	Chrome-plated 316 SS/A276		
12	Body	316 SS/A182	Brass C37700/B283	Alloy

Dimensions

Straight Pattern

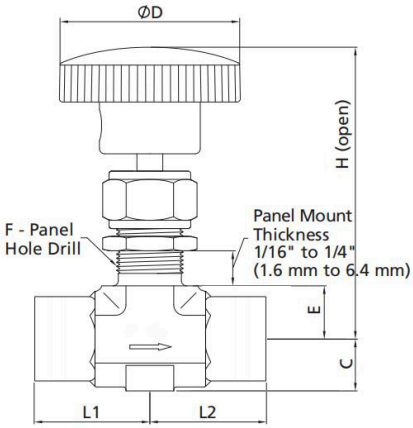

Angle Pattern

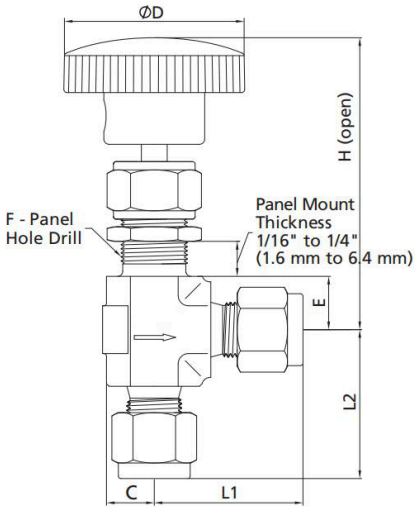

Dimensions of BN Series

Basic Ordering Number	Connection Type and Size		Orifice in.(mm)	Cv	Dimension, in.(mm)						
	Inlet	Outlet			L1	L2	C	D	E	F	H
-BN-FN2-3	1/8 Female NPT	1/8 Female NPT	0.12 (3.0)	0.20	0.97 (24.6)	0.97 (24.6)	0.39 (10.0)	1.38 (35.0)	0.44 (11.2)	0.53 (13.5)	2.50 (63.5)
-BN-FN4-4	1/4 Female NPT	1/4 Female NPT	0.16 (4.0)	0.35	1.06 (27.0)	1.06 (27.0)	0.50 (12.7)	1.38 (35.0)	0.50 (12.7)	0.78 (19.8)	2.97 (75.5)
-BN-FN6-5	3/8 Female NPT	3/8 Female NPT	0.2 (5.1)	0.56	1.06 (27.0)	1.06 (27.0)	0.50 (12.7)	1.88 (47.8)	0.50 (12.7)	0.78 (19.8)	2.97 (75.5)
-BN-FN8-6	1/2 Female NPT	1/2 Female NPT	0.25 (6.4)	0.70	1.50 (38.1)	1.50 (38.1)	0.75 (19.1)	1.88 (47.8)	0.75 (19.1)	1.03 (26.2)	3.91 (93.3)
-BN-FN12-7	3/4 Female NPT	3/4 Female NPT	0.29 (7.5)	0.95	1.63 (41.3)	1.63 (41.3)	0.75 (19.1)	3.00 (76.2)	0.75 (19.1)	1.03 (26.2)	3.91 (93.3)
-BN-MN2-3	1/8 Male NPT	1/8 Male NPT	0.08 (3.0)	0.20	0.81 (21.6)	0.81 (21.6)	0.39 (10.0)	1.38 (35.0)	0.44 (11.2)	0.53 (13.5)	2.50 (63.5)
-BN-MN4-4	1/4 Male NPT	1/4 Male NPT	0.16 (4.0)	0.35	0.98 (25.0)	0.98 (25.0)	0.39 (10.0)	1.38 (35.0)	0.44 (11.2)	0.53 (13.5)	2.50 (63.5)
-BN-MN6-5	3/8 Male NPT	3/8 Male NPT	0.2 (5.1)	0.56	1.12 (28.4)	1.12 (28.4)	0.50 (12.7)	1.88 (47.8)	0.50 (12.7)	0.78 (19.8)	2.97 (75.5)
-BN-MN8-6	1/2 Male NPT	1/2 Male NPT	0.25 (6.4)	0.70	1.50 (38.1)	1.50 (38.1)	0.50 (12.7)	1.88 (47.8)	0.50 (12.7)	0.78 (19.8)	2.97 (75.5)
-BN-MN12-7	3/4 Male NPT	3/4 Male NPT	0.29 (7.5)	0.95	1.63 (41.3)	1.63 (41.3)	0.75 (19.1)	3.00 (76.2)	0.75 (19.1)	1.03 (26.2)	3.91 (93.3)
-BN-FT2-2	1/8″ Tube	1/8″ Tube	0.12 (3.0)	0.20	0.98 (25.0)	0.98 (25.0)	0.39 (10.0)	1.38 (35.0)	0.44 (11.2)	0.53 (13.5)	2.50 (63.5)
-BN-FT4-4	1/4″ Tube	1/4″ Tube	0.16 (4.0)	0.35	1.12 (28.4)	1.12 (28.4)	0.39 (10.0)	1.38 (35.0)	0.44 (11.2)	0.53 (13.5)	2.50 (63.5)
-BN-FT6-5	3/8″ Tube	3/8″ Tube	0.20 (5.1)	0.56	1.29 (32.8)	1.29 (32.8)	0.50 (12.7)	1.88 (47.8)	0.50 (12.7)	0.78 (19.8)	2.97 (75.5)
-BN-FT8-6	1/2″ Tube	1/2″ Tube	0.25 (6.4)	0.70	1.40 (35.6)	1.40 (35.6)	0.50 (12.7)	1.88 (47.8)	0.50 (12.7)	0.78 (19.8)	2.97 (75.5)
-BN-FT12-7	3/4″ Tube	3/4″ Tube	0.29 (7.5)	0.95	1.90 (48.3)	1.90 (48.3)	0.75 (19.1)	3.00 (76.2)	0.75 (19.1)	1.03 (26.2)	3.91 (93.3)
-BN-MT3-2	3 mm	3 mm	0.08 (2.0)	0.09	0.98 (25.0)	0.98 (25.0)	0.39 (10.0)	1.38 (35.0)	0.44 (11.2)	0.53 (13.5)	2.50 (63.5)
-BN-MT6-4	6 mm	6 mm	0.16 (4.0)	0.35	1.12 (28.4)	1.12 (28.4)	0.39 (10.0)	1.38 (35.0)	0.44 (11.2)	0.53 (13.5)	2.50 (63.5)
-BN-MT8-4	8 mm	8 mm	0.16 (4.0)	0.35	1.17 (29.6)	1.17 (29.6)	0.39 (10.0)	1.38 (35.0)	0.44 (11.2)	0.53 (13.5)	2.50 (63.5)
-BN-MT10-5	10 mm	10 mm	0.20 (5.1)	0.56	1.29 (32.8)	1.29 (32.8)	0.50 (12.7)	1.88 (47.8)	0.50 (12.7)	0.78 (19.8)	2.97 (75.5)
-BN-MT12-6	12 mm	12 mm	0.25 (6.4)	0.70	1.40 (35.6)	1.40 (35.6)	0.50 (12.7)	1.88 (47.8)	0.50 (12.7)	0.78 (19.8)	2.97 (75.5)
-BN-MT14-6	14 mm	14 mm	0.25 (6.4)	0.70	1.56 (39.7)	1.56 (39.7)	0.50 (12.7)	1.88 (47.8)	0.50 (12.7)	0.78 (19.8)	2.97 (75.5)
-BN-MT18-7	18 mm	18 mm	0.29 (7.5)	0.95	1.75 (44.5)	1.75 (44.5)	0.75 (19.1)	3.00 (76.2)	0.75 (19.1)	1.03 (26.2)	3.91 (93.3)
-BN-MT20-7	20 mm	20 mm	0.29 (7.5)	0.95	1.90 (48.3)	1.90 (48.3)	0.75 (19.1)	3.00 (76.2)	0.75 (19.1)	1.03 (26.2)	3.91 (93.3)

Dimensions of BNH Series

Basic Ordering Number	Connection Type and Size		Orifice	Cv	Dimension, in.(mm)						
	Inlet	Outlet	in(mm)		L1	L2	C	D	E	F	H
-BNH-FN2-3	1/8 Female NPT	1/8 Female NPT	0.12 (3.0)	0.20	0.81 (21.6)	0.81 (21.6)	0.39 (10.0)	1.38 (35.0)	0.44 (11.2)	0.53 (13.5)	2.50 (63.5)
-BNH-FN4-4	1/4 Female NPT	1/4 Female NPT	0.16 (4.0)	0.35	1.06 (27.0)	1.06 (27.0)	0.50 (12.7)	1.88 (47.8)	0.50 (12.7)	0.78 (19.8)	2.97 (75.5)
-BNH-FN6-5	3/8 Female NPT	3/8 Female NPT	0.2 (5.1)	0.56	1.06 (27.0)	1.06 (27.0)	0.50 (12.7)	1.88 (47.8)	0.50 (12.7)	0.78 (19.8)	2.97 (75.5)
-BNH-FN8-6	1/2 Female NPT	1/2 Female NPT	0.25 (6.4)	0.70	1.50 (38.1)	1.50 (38.1)	0.75 (19.1)	3.00 (76.2)	0.75 (19.1)	1.03 (26.2)	3.91 (93.3)
-BNH-FN12-7	3/4 Female NPT	3/4 Female NPT	0.29 (7.5)	0.95	1.63 (41.3)	1.63 (41.3)	0.75 (19.1)	3.00 (76.2)	0.75 (19.1)	1.03 (26.2)	3.91 (93.3)
-BNH-MN2-3	1/8 Male NPT	1/8 Male NPT	0.08 (3.0)	0.20	0.81 (21.6)	0.81 (21.6)	0.39 (10.0)	1.38 (35.0)	0.44 (11.2)	0.53 (13.5)	2.50 (63.5)
-BNH-MN4-4	1/4 Male NPT	1/4 Male NPT	0.16 (4.0)	0.35	0.98 (25.0)	0.98 (25.0)	0.39 (10.0)	1.38 (35.0)	0.44 (11.2)	0.53 (13.5)	2.50 (63.5)
-BNH-MN6-5	3/8 Male NPT	3/8 Male NPT	0.2 (5.1)	0.56	1.12 (28.4)	1.12 (28.4)	0.50 (12.7)	1.88 (47.8)	0.50 (12.7)	0.78 (19.8)	2.97 (75.5)
-BNH-MN8-6	1/2 Male NPT	1/2 Male NPT	0.25 (6.4)	0.70	1.50 (38.1)	1.50 (38.1)	0.50 (12.7)	1.88 (47.8)	0.50 (12.7)	0.78 (19.8)	2.97 (75.5)
-BNH-MN12-7	3/4 Male NPT	3/4 Male NPT	0.29 (7.5)	0.95	1.63 (41.3)	1.63 (41.3)	0.75 (19.1)	3.00 (76.2)	0.75 (19.1)	1.03 (26.2)	3.91 (93.3)
-BNH-FT2-2	1/8″ Tube	1/8″ Tube	0.08 (2.0)	0.09	0.98 (25.0)	0.98 (25.0)	0.39 (10.0)	1.38 (35.0)	0.44 (11.2)	0.53 (13.5)	2.50 (63.5)
-BNH-FT4-4	1/4″ Tube	1/4″ Tube	0.16 (4.0)	0.35	1.12 (28.4)	1.12 (28.4)	0.39 (10.0)	1.38 (35.0)	0.44 (11.2)	0.53 (13.5)	2.50 (63.5)
-BNH-FT6-5	3/8″ Tube	3/8″ Tube	0.20 (5.1)	0.56	1.29 (32.8)	1.29 (32.8)	0.50 (12.7)	1.88 (47.8)	0.50 (12.7)	0.78 (19.8)	2.97 (75.5)
-BNH-FT8-6	1/2″ Tube	1/2″ Tube	0.25 (6.4)	0.70	1.40 (35.6)	1.40 (35.6)	0.50 (12.7)	1.88 (47.8)	0.50 (12.7)	0.78 (19.8)	2.97 (75.5)
-BNH-FT12-7	3/4″ Tube	3/4″ Tube	0.29 (7.5)	0.95	1.90 (48.3)	1.90 (48.3)	0.75 (19.1)	3.00 (76.2)	0.75 (19.1)	1.03 (26.2)	3.91 (93.3)
-BNH-MT3-2	3 mm	3 mm	0.08 (2.0)	0.09	0.98 (25.0)	0.98 (25.0)	0.39 (10.0)	1.38 (35.0)	0.44 (11.2)	0.53 (13.5)	2.50 (63.5)
-BNH-MT6-4	6 mm	6 mm	0.16 (4.0)	0.35	1.12 (28.4)	1.12 (28.4)	0.39 (10.0)	1.38 (35.0)	0.44 (11.2)	0.53 (13.5)	2.50 (63.5)
-BNH-MT8-4	8 mm	8 mm	0.16 (4.0)	0.35	1.17 (29.6)	1.17 (29.6)	0.39 (10.0)	1.38 (35.0)	0.44 (11.2)	0.53 (13.5)	2.50 (63.5)
-BNH-MT10-5	10 mm	10 mm	0.20 (5.1)	0.56	1.29 (32.8)	1.29 (32.8)	0.50 (12.7)	1.88 (47.8)	0.50 (12.7)	0.78 (19.8)	2.97 (75.5)
-BNH-MT12-6	12 mm	12 mm	0.25 (6.4)	0.70	1.40 (35.6)	1.40 (35.6)	0.50 (12.7)	1.88 (47.8)	0.50 (12.7)	0.78 (19.8)	2.97 (75.5)
-BNH-MT14-6	14 mm	14 mm	0.25 (6.4)	0.70	1.56 (39.7)	1.56 (39.7)	0.50 (12.7)	1.88 (47.8)	0.50 (12.7)	0.78 (19.8)	2.97 (75.5)
-BNH-MT18-7	18 mm	18 mm	0.29 (7.5)	0.95	1.75 (44.5)	1.75 (44.5)	0.75 (19.1)	3.00 (76.2)	0.75 (19.1)	1.03 (26.2)	3.91 (93.3)
-BNH-MT20-7	20 mm	20 mm	0.29 (7.5)	0.95	1.90 (48.3)	1.90 (48.3)	0.75 (19.1)	3.00 (76.2)	0.75 (19.1)	1.03 (26.2)	3.91 (93.3)

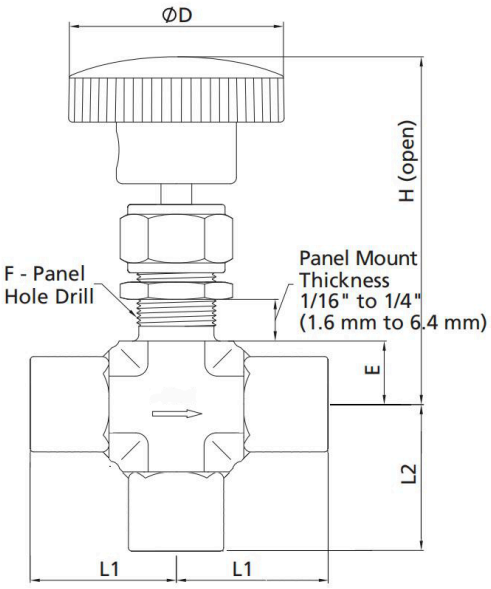

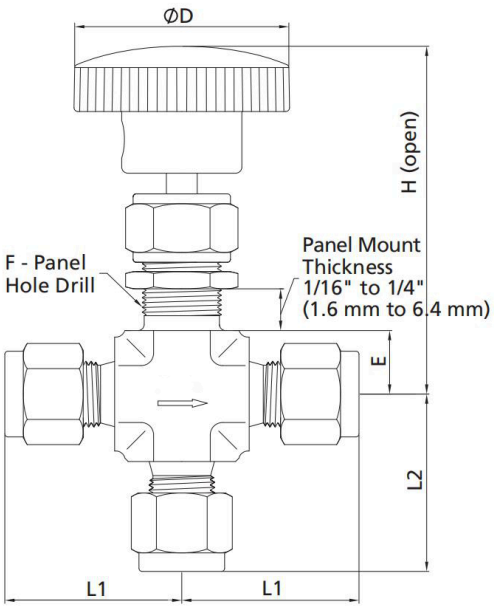

Dimensions of BN 3-Way Series

Basic Ordering Number	Connection Type and Size		Orifice	Cv	Dimension, in.(mm)						
	Inlet	Outlet	in(mm)		L1	L2	C	D	E	F	H
-BN-FN2-3-3W	1/8 Female NPT	1/8 Female NPT	0.12 (3.0)	0.20	0.81 (21.6)	0.81 (21.6)	0.39 (10.0)	2.50 (63.5)	0.44 (11.2)	0.53 (13.5)	2.50 (63.5)
-BN-FN4-4-3W	1/4 Female NPT	1/4 Female NPT	0.16 (4.0)	0.35	1.06 (27.0)	1.06 (27.0)	0.50 (12.7)	2.97 (75.5)	0.50 (12.7)	0.78 (19.8)	2.97 (75.5)
-BN-FN6-5-3W	3/8 Female NPT	3/8 Female NPT	0.2 (5.1)	0.56	1.06 (27.0)	1.06 (27.0)	0.50 (12.7)	2.97 (75.5)	0.50 (12.7)	0.78 (19.8)	2.97 (75.5)
-BN-FN8-6-3W	1/2 Female NPT	1/2 Female NPT	0.25 (6.4)	0.70	1.50 (38.1)	1.50 (38.1)	0.75 (19.1)	3.91 (93.3)	0.75 (19.1)	1.03 (26.2)	3.91 (93.3)
-BN-FN12-7-3W	3/4 Female NPT	3/4 Female NPT	0.29 (7.5)	0.95	1.63 (41.3)	1.63 (41.3)	0.75 (19.1)	3.91 (93.3)	0.75 (19.1)	1.03 (26.2)	3.91 (93.3)
-BN-MN2-3-3W	1/8 Male NPT	1/8 Male NPT	0.08 (3.0)	0.20	0.81 (21.6)	0.81 (21.6)	0.39 (10.0)	2.50 (63.5)	0.44 (11.2)	0.53 (13.5)	2.50 (63.5)
-BN-MN4-4-3W	1/4 Male NPT	1/4 Male NPT	0.16 (4.0)	0.35	0.98 (25.0)	0.98 (25.0)	0.39 (10.0)	2.50 (63.5)	0.44 (11.2)	0.53 (13.5)	2.50 (63.5)
-BN-MN6-5-3W	3/8 Male NPT	3/8 Male NPT	0.2 (5.1)	0.56	1.12 (28.4)	1.12 (28.4)	0.50 (12.7)	2.97 (75.5)	0.50 (12.7)	0.78 (19.8)	2.97 (75.5)
-BN-MN8-6-3W	1/2 Male NPT	1/2 Male NPT	0.25 (6.4)	0.70	1.50 (38.1)	1.50 (38.1)	0.50 (12.7)	2.97 (75.5)	0.50 (12.7)	0.78 (19.8)	2.97 (75.5)
-BN-MN12-7-3W	3/4 Male NPT	3/4 Male NPT	0.29 (7.5)	0.95	1.63 (41.3)	1.63 (41.3)	0.75 (19.1)	3.91 (93.3)	0.75 (19.1)	1.03 (26.2)	3.91 (93.3)
-BN-FT2-2-3W	1/8″ Tube	1/8″ Tube	0.12 (3.0)	0.20	0.98 (25.0)	0.98 (25.0)	0.39 (10.0)	1.38 (35.0)	0.44 (11.2)	0.53 (13.5)	2.50 (63.5)
-BN-FT4-4-3W	1/4″ Tube	1/4″ Tube	0.16 (4.0)	0.35	1.12 (28.4)	1.12 (28.4)	0.39 (10.0)	1.38 (35.0)	0.44 (11.2)	0.53 (13.5)	2.50 (63.5)
-BN-FT6-5-3W	3/8″ Tube	3/8″ Tube	0.20 (5.1)	0.56	1.29 (32.8)	1.29 (32.8)	0.50 (12.7)	1.88 (47.8)	0.50 (12.7)	0.78 (19.8)	2.97 (75.5)
-BN-FT8-6-3W	1/2″ Tube	1/2″ Tube	0.25 (6.4)	0.70	1.40 (35.6)	1.40 (35.6)	0.50 (12.7)	1.88 (47.8)	0.50 (12.7)	0.78 (19.8)	2.97 (75.5)
-BN-FT12-9-3W	3/4″ Tube	3/4″ Tube	0.29 (7.5)	0.95	1.90 (48.3)	1.90 (48.3)	0.75 (19.1)	3.00 (76.2)	0.75 (19.1)	1.03 (26.2)	3.91 (93.3)
-BN-MT3-2-3W	3 mm	3 mm	0.08 (2.0)	0.09	0.98 (25.0)	0.98 (25.0)	0.39 (10.0)	1.38 (35.0)	0.44 (11.2)	0.53 (13.5)	2.50 (63.5)
-BN-MT6-4-3W	6 mm	6 mm	0.16 (4.0)	0.35	1.12 (28.4)	1.12 (28.4)	0.39 (10.0)	1.38 (35.0)	0.44 (11.2)	0.53 (13.5)	2.50 (63.5)
-BN-MT8-4-3W	8 mm	8 mm	0.16 (4.0)	0.35	1.17 (29.6)	1.17 (29.6)	0.39 (10.0)	1.38 (35.0)	0.44 (11.2)	0.53 (13.5)	2.50 (63.5)
-BN-MT10-5-3W	10 mm	10 mm	0.20 (5.1)	0.56	1.29 (32.8)	1.29 (32.8)	0.50 (12.7)	1.88 (47.8)	0.50 (12.7)	0.78 (19.8)	2.97 (75.5)
-BN-MT12-6-3W	12 mm	12 mm	0.25 (6.4)	0.70	1.40 (35.6)	1.40 (35.6)	0.50 (12.7)	1.88 (47.8)	0.50 (12.7)	0.78 (19.8)	2.97 (75.5)
-BN-MT14-6-3W	14 mm	14 mm	0.25 (6.4)	0.70	1.56 (39.7)	1.56 (39.7)	0.50 (12.7)	1.88 (47.8)	0.50 (12.7)	0.78 (19.8)	2.97 (75.5)
-BN-MT18-7-3W	18 mm	18 mm	0.29 (7.5)	0.95	1.75 (44.5)	1.75 (44.5)	0.75 (19.1)	3.00 (76.2)	0.75 (19.1)	1.03 (26.2)	3.91 (93.3)
-BN-MT20-7-3W	20 mm	20 mm	0.29 (7.5)	0.95	1.90 (48.3)	1.90 (48.3)	0.75 (19.1)	3.00 (76.2)	0.75 (19.1)	1.03 (26.2)	3.91 (93.3)

Dimensions of BNH 3-Way Series

Basic Ordering Number	Connection Type and Size		Orifice	Cv	Dimension, in.(mm)						
	Inlet	Outlet	in(mm)		L1	L2	C	D	E	F	H
-BNH-FN2-3-3W	1/8 Female NPT	1/8 Female NPT	0.12 (3.0)	0.20	0.81 (21.6)	0.81 (21.6)	0.39 (10.0)	1.38 (35.0)	0.44 (11.2)	0.53 (13.5)	2.50 (63.5)
-BNH-FN4-4-3W	1/4 Female NPT	1/4 Female NPT	0.16 (4.0)	0.35	1.06 (27.0)	1.06 (27.0)	0.50 (12.7)	1.88 (47.8)	0.50 (12.7)	0.78 (19.8)	2.97 (75.5)
-BNH-FN6-5-3W	3/8 Female NPT	3/8 Female NPT	0.2 (5.1)	0.56	1.06 (27.0)	1.06 (27.0)	0.50 (12.7)	1.88 (47.8)	0.50 (12.7)	0.78 (19.8)	2.97 (75.5)
-BNH-FN8-6-3W	1/2 Female NPT	1/2 Female NPT	0.25 (6.4)	0.70	1.50 (38.1)	1.50 (38.1)	0.75 (19.1)	3.00 (76.2)	0.75 (19.1)	1.03 (26.2)	3.91 (93.3)
-BNH-FN12-7-3W	3/4 Female NPT	3/4 Female NPT	0.29 (7.5)	0.95	1.63 (41.3)	1.63 (41.3)	0.75 (19.1)	3.00 (76.2)	0.75 (19.1)	1.03 (26.2)	3.91 (93.3)
-BNH-MN2-3-3W	1/8 Male NPT	1/8 Male NPT	0.08 (3.0)	0.20	0.81 (21.6)	0.81 (21.6)	0.39 (10.0)	1.38 (35.0)	0.44 (11.2)	0.53 (13.5)	2.50 (63.5)
-BNH-MN4-4-3W	1/4 Male NPT	1/4 Male NPT	0.16 (4.0)	0.35	0.98 (25.0)	0.98 (25.0)	0.39 (10.0)	1.38 (35.0)	0.44 (11.2)	0.53 (13.5)	2.50 (63.5)
-BNH-MN6-5-3W	3/8 Male NPT	3/8 Male NPT	0.2 (5.1)	0.56	1.12 (28.4)	1.12 (28.4)	0.50 (12.7)	1.88 (47.8)	0.50 (12.7)	0.78 (19.8)	2.97 (75.5)
-BNH-MN8-6-3W	1/2 Male NPT	1/2 Male NPT	0.25 (6.4)	0.70	1.50 (38.1)	1.50 (38.1)	0.50 (12.7)	1.88 (47.8)	0.50 (12.7)	0.78 (19.8)	2.97 (75.5)
-BNH-MN12-7-3W	3/4 Male NPT	3/4 Male NPT	0.29 (7.5)	0.95	1.63 (41.3)	1.63 (41.3)	0.75 (19.1)	3.00 (76.2)	0.75 (19.1)	1.03 (26.2)	3.91 (93.3)

Basic Ordering Number	Connection Type and Size		Orifice	Cv	Dimension, in.(mm)						
	Inlet	Outlet	in(mm)		L1	L2	C	D	E	F	H
-BNH-FT2-2-3W	1/8″ Tube	1/8″ Tube	0.12 (3.0)	0.20	0.98 (25.0)	0.98 (25.0)	0.39 (10.0)	1.38 (35.0)	0.44 (11.2)	0.53 (13.5)	2.50 (63.5)
-BNH-FT4-4-3W	1/4″ Tube	1/4″ Tube	0.16 (4.0)	0.35	1.12 (28.4)	1.12 (28.4)	0.39 (10.0)	1.38 (35.0)	0.44 (11.2)	0.53 (13.5)	2.50 (63.5)
-BNH-FT6-5-3W	3/8″ Tube	3/8″ Tube	0.20 (5.1)	0.56	1.29 (32.8)	1.29 (32.8)	0.50 (12.7)	1.88 (47.8)	0.50 (12.7)	0.78 (19.8)	2.97 (75.5)
-BNH-FT8-6-3W	1/2″ Tube	1/2″ Tube	0.25 (6.4)	0.70	1.40 (35.6)	1.40 (35.6)	0.50 (12.7)	1.88 (47.8)	0.50 (12.7)	0.78 (19.8)	2.97 (75.5)
-BNH-FT12-9-3W	3/4″ Tube	3/4″ Tube	0.29 (7.5)	0.95	1.90 (48.3)	1.90 (48.3)	0.75 (19.1)	3.00 (76.2)	0.75 (19.1)	1.03 (26.2)	3.91 (93.3)
-BNH-MT3-2-3W	3 mm	3 mm	0.08 (2.0)	0.09	0.98 (25.0)	0.98 (25.0)	0.39 (10.0)	1.38 (35.0)	0.44 (11.2)	0.53 (13.5)	2.50 (63.5)
-BNH-MT6-4-3W	6 mm	6 mm	0.16 (4.0)	0.35	1.12 (28.4)	1.12 (28.4)	0.39 (10.0)	1.38 (35.0)	0.44 (11.2)	0.53 (13.5)	2.50 (63.5)
-BNH-MT8-4-3W	8 mm	8 mm	0.16 (4.0)	0.35	1.17 (29.6)	1.17 (29.6)	0.39 (10.0)	1.38 (35.0)	0.44 (11.2)	0.53 (13.5)	2.50 (63.5)
-BNH-MT10-5-3W	10 mm	10 mm	0.20 (5.1)	0.56	1.29 (32.8)	1.29 (32.8)	0.50 (12.7)	1.88 (47.8)	0.50 (12.7)	0.78 (19.8)	2.97 (75.5)
-BNH-MT12-6-3W	12 mm	12 mm	0.25 (6.4)	0.70	1.40 (35.6)	1.40 (35.6)	0.50 (12.7)	1.88 (47.8)	0.50 (12.7)	0.78 (19.8)	2.97 (75.5)
-BNH-MT14-6-3W	14 mm	14 mm	0.25 (6.4)	0.70	1.56 (39.7)	1.56 (39.7)	0.50 (12.7)	1.88 (47.8)	0.50 (12.7)	0.78 (19.8)	2.97 (75.5)
-BNH-MT18-7-3W	18 mm	18 mm	0.29 (7.5)	0.95	1.75 (44.5)	1.75 (44.5)	0.75 (19.1)	3.00 (76.2)	0.75 (19.1)	1.03 (26.2)	3.91 (93.3)
-BNH-MT20-7-3W	20 mm	20 mm	0.29 (7.5)	0.95	1.90 (48.3)	1.90 (48.3)	0.75 (19.1)	3.00 (76.2)	0.75 (19.1)	1.03 (26.2)	3.91 (93.3)

1. Sizes and types listed are standard. Other sizes and types are available upon request, refer to the ordering information.
2. Dimensions are shown with ROKE nuts finger-tightened. All dimensions are for reference only and are subject to change.
3. For dimensions not shown above, please contact the authorized representative or ROKE employees.

Pressure vs. Temperature

BN Series

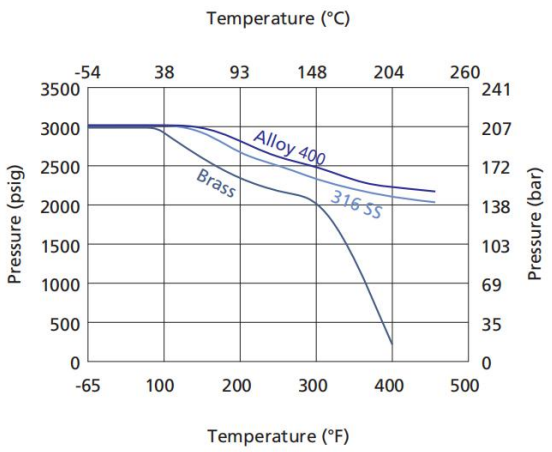

BNG Series

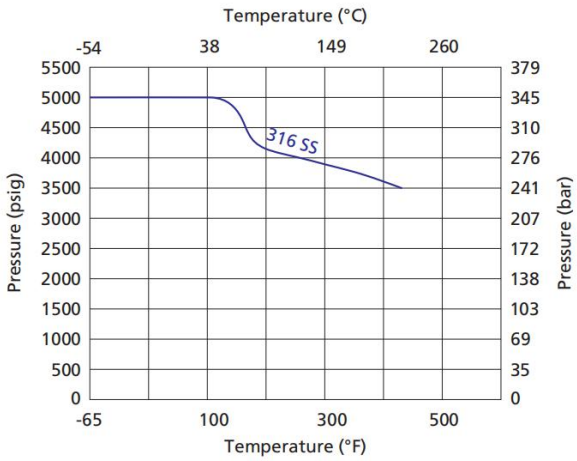

Flow Data at 100°F (38°C)

Regulating Stem

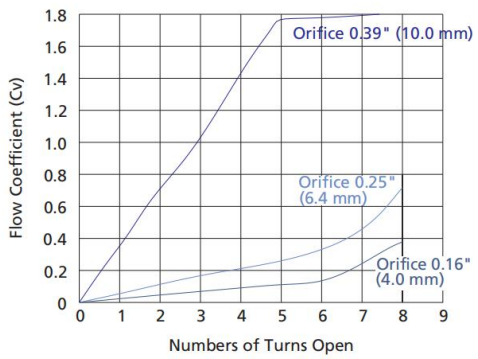

Integral Forged Needle Valves

FN Series: Maximum working pressure 6000 psig

Features

- ◎ One-piece forged body.
- ◎ Panel mounting available as an option.
- ◎ Steady and durable fastening of the handle by double lock-pins.
- ◎ Handle color options are available.
- ◎ Leak-tight performance testing for every valve with nitrogen at the maximum working pressure.
- ◎ Maximum working pressure:
  NF Series—Stainless steel: 6000 psig (414 bar)
  Alloy C-276: 6000 psig (414 bar)
  Alloy 400: 5000 psig (345 bar)
  Titanium: 3500 psig (241 bar)
  Brass: 3000 psig (207 bar)
- ◎ Working temperature:
  PTFE: -65°F to 450°F (-54°C to 232°C)
  PEEK: -65°F to 500°F (-54°C to 260°C)
  Graphite: -65°F to 820°F (-54°C to 454°C)

Standard Materials of Construction

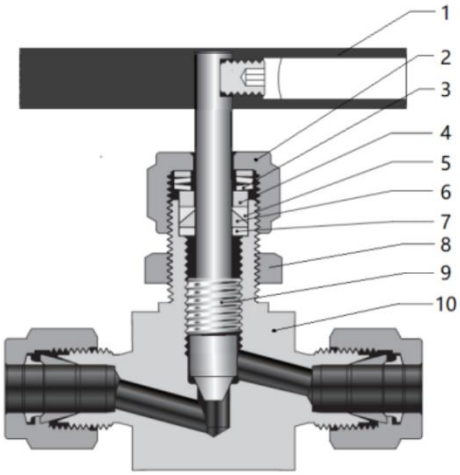

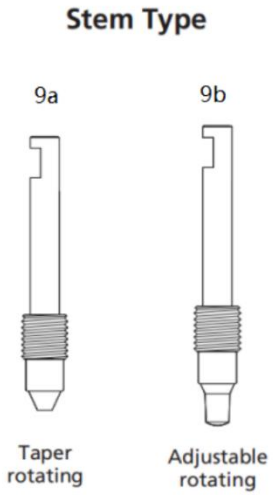

Item	Component	Valve Body Material		
		316 SS	Brass	Steel
1	Handle	Anodized aluminum or stainless steel or black knob		
2	Packing Nut	304 SS/A276	Brass C36000/B16	Alloy 400/B164
3	Packing Spring	S17700/A693		
4	Washer	316 SS/A276		
5	Upper Packing	PTFE/PEEK		
6	Lower Packing			
7	Packing Washer	316 SS/A276		
8	Panel Nut	17-4PH		
9	Stem	Chrome-plated 316 SS/A276		
10	Body	316 SS/A182	Brass C37700/B283	Alloy

Dimensions

Straight Pattern

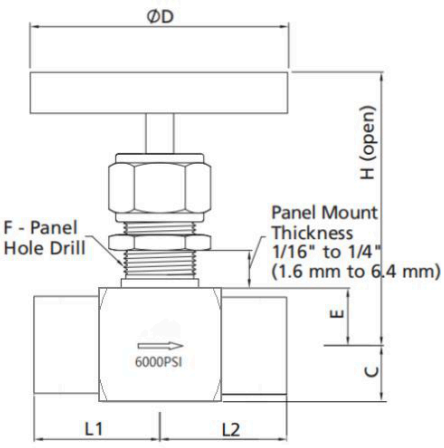

Angle Pattern

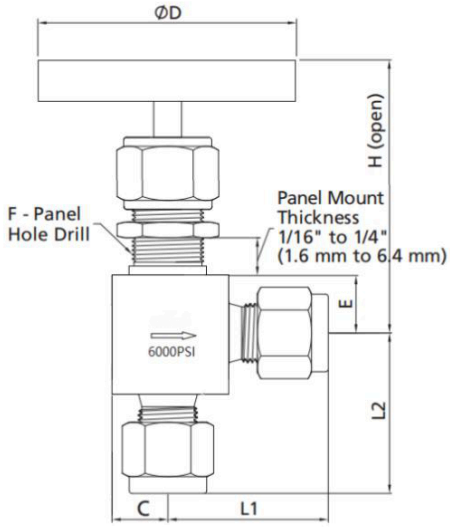

Dimensions of FN Series

Basic Ordering Number	Connection Type and Size		Orifice in(mm)	Cv	Dimension, in.(mm)						
	Inlet	Outlet			L1	L2	C	D	E	F	H
-FN-FN2-3	1/8 Female NPT	1/8 Female NPT	0.12 (3.0)	0.20	0.98 (25.0)	0.98 (25.0)	0.39 (10.0)	1.77 (45.0)	0.39 (10.0)	0.63 (16.0)	3.23 (82.0)
-FN-FN4-4	1/4 Female NPT	1/4 Female NPT	0.16 (4.0)	0.35	1.06 (27.0)	1.06 (27.0)	0.47 (12.0)	2.05 (52.0)	0.47 (12.0)	0.63 (16.0)	3.35 (85.0)
-FN-FN6-5	3/8 Female NPT	3/8 Female NPT	0.20 (5.1)	0.56	1.14 (29.0)	1.14 (29.0)	0.51 (13.0)	2.17 (55.0)	0.51 (13.0)	0.71 (18.0)	3.62 (92.0)
-FN-FN8-6	1/2 Female NPT	1/2 Female NPT	0.25 (6.4)	0.70	1.26 (32.0)	1.26 (32.0)	0.63 (16.0)	2.17 (55.0)	0.63 (16.0)	0.71 (18.0)	3.78 (96.0)
			0.29 (7.5)	0.95	1.26 (32.0)	1.26 (32.0)	0.63 (16.0)	2.17 (55.0)	0.63 (16.0)	0.79 (20.0)	3.78 (96.0)
-FN-FN12-9	3/4 Female NPT	3/4 Female NPT	0.36 (9.1)	1.60	1.30 (33.0)	1.30 (33.0)	0.71 (18.0)	2.36 (60.0)	0.71 (18.0)	0.79 (20.0)	3.94 (100)
-FN-FN16-12	1 Female NPT	1 Female NPT	0.48 (12.2)	2.65	1.42 (36.0)	1.42 (36.0)	0.87 (22.0)	2.76 (70.0)	0.87 (22.0)	0.94 (24.0)	4.17 (106)
-FN-MN2-3	1/8 Male NPT	1/8 Male NPT	0.12 (3.0)	0.20	0.98 (25.0)	0.98 (25.0)	0.39 (10.0)	1.77 (45.0)	0.39 (10.0)	0.63 (16.0)	3.23 (82.0)
-FN-MN4-4	1/4 Male NPT	1/4 Male NPT	0.16 (4.0)	0.35	1.06 (27.0)	1.06 (27.0)	0.39 (10.0)	1.77 (45.0)	0.39 (10.0)	0.63 (16.0)	3.23 (82.0)
-FN-MN6-5	3/8 Male NPT	3/8 Male NPT	0.20 (5.1)	0.56	1.14 (29.0)	1.14 (29.0)	0.47 (12.0)	2.05 (52.0)	0.47 (12.0)	0.63 (16.0)	3.35 (85.0)
-FN-MN8-6	1/2 Male NPT	1/2 Male NPT	0.25 (6.4)	0.70	1.30 (33.0)	1.30 (33.0)	0.51 (13.0)	2.17 (55.0)	0.51 (13.0)	0.71 (18.0)	3.62 (92.0)
-FN-MN12-7	3/4 Male NPT	3/4 Male NPT	0.29 (7.5)	0.95	1.42 (36.0)	1.42 (36.0)	0.63 (16.0)	2.17 (55.0)	0.63 (16.0)	0.79 (20.0)	3.78 (96.0)
-FN-MN16-9	1 Male NPT	1 Male NPT	0.36 (9.1)	1.60	1.61 (41.0)	1.61 (41.0)	0.71 (18.0)	2.36 (60.0)	0.71 (18.0)	0.79 (20.0)	3.94 (100)
-FN-SW2-3	1/8 Soket Weld	1/8 Soket Weld	0.12 (3.0)	0.20	0.94 (23.8)	0.94 (23.8)	0.39 (10.0)	1.77 (45.0)	0.39 (10.0)	0.63 (16.0)	3.23 (82.0)
-FN-SW4-4	1/4 Soket Weld	1/4 Soket Weld	0.16 (4.0)	0.35	0.98 (25.0)	0.98 (25.0)	0.47 (12.0)	2.05 (52.0)	0.47 (12.0)	0.63 (16.0)	3.35 (85.0)
-FN-SW6-5	3/8 Soket Weld	3/8 Soket Weld	0.20 (5.1)	0.56	1.06 (27.0)	1.06 (27.0)	0.51 (13.0)	2.17 (55.0)	0.51 (13.0)	0.71 (18.0)	3.62 (92.0)
-FN-SW8-6	1/2 Soket Weld	1/2 Soket Weld	0.25 (6.4)	0.70	1.14 (29.0)	1.14 (29.0)	0.63 (16.0)	2.17 (55.0)	0.63 (16.0)	0.71 (18.0)	3.78 (96.0)
			0.29 (7.5)	0.95	1.14 (29.0)	1.14 (29.0)	0.63 (16.0)	2.17 (55.0)	0.63 (16.0)	0.79 (20.0)	3.78 (96.0)
-FN-SW12-9	3/4 Soket Weld	3/4 Soket Weld	0.36 (9.1)	1.60	1.14 (29.0)	1.14 (29.0)	0.71 (18.0)	2.36 (60.0)	0.71 (18.0)	0.79 (20.0)	3.94 (100)
-FN-SW16-12	1 Soket Weld	1 Soket Weld	0.48 (12.2)	2.65	1.30 (33.0)	1.30 (33.0)	0.87 (22.0)	2.76 (70.0)	0.87 (22.0)	0.94 (24.0)	4.17 (106)

Dimensions of FN Series

Basic Ordering Number	Connection Type and Size		Orifice in(mm)	Cv	Dimension, in.(mm)						
	Inlet	Outlet			L1	L2	C	D	E	F	H
-FN-FT2-2	1/8″ Tube	1/8″ Tube	0.08 (2.0)	0.09	0.98 (25.0)	0.98 (25.0)	0.39 (10.0)	1.77 (45.0)	0.39 (10.0)	0.63 (16.0)	3.23 (82.0)
-FN-FT4-4	1/4″ Tube	1/4″ Tube	0.16 (4.0)	0.35	1.14 (29.0)	1.14 (29.0)	0.39 (10.0)	1.77 (45.0)	0.39 (10.0)	0.63 (16.0)	3.23 (82.0)
-FN-FT6-5	3/8″ Tube	3/8″ Tube	0.20 (5.1)	0.56	1.30 (33.0)	1.30 (33.0)	0.47 (12.0)	2.05 (52.0)	0.47 (12.0)	0.63 (16.0)	3.35 (85.0)
-FN-FT8-6	1/2″ Tube	1/2″ Tube	0.25 (6.4)	0.70	1.42 (36.0)	1.42 (36.0)	0.51 (13.0)	2.17 (55.0)	0.51 (13.0)	0.71 (18.0)	3.62 (92.0)
-FN-FT12-9	3/4″ Tube	3/4″ Tube	0.29 (7.5)	0.95	1.89 (48.0)	1.89 (48.0)	0.63 (16.0)	2.17 (55.0)	0.63 (16.0)	0.79 (20.0)	3.78 (96.0)
-FN-FT16-12	1″ Tube	1″ Tube	0.36 (9.1)	1.60	2.05 (52.0)	2.05 (52.0)	0.71 (18.0)	2.36 (60.0)	0.71 (18.0)	0.79 (20.0)	3.94 (100)
-FN-MT3-2	3 mm	3 mm	0.08 (2.0)	0.09	0.98 (25.0)	0.98 (25.0)	0.39 (10.0)	1.77 (45.0)	0.39 (10.0)	0.63 (16.0)	3.23 (82.0)
-FN-MT6-4	6 mm	6 mm	0.16 (4.0)	0.35	1.14 (29.0)	1.14 (29.0)	0.39 (10.0)	1.77 (45.0)	0.39 (10.0)	0.63 (16.0)	3.23 (82.0)
-FN-MT8-4	8 mm	8 mm	0.16 (4.0)	0.35	1.14 (29.0)	1.14 (29.0)	0.39 (10.0)	1.77 (45.0)	0.39 (10.0)	0.63 (16.0)	3.23 (82.0)
-FN-MT10-5	10 mm	10 mm	0.20 (5.1)	0.56	1.30 (33.0)	1.30 (33.0)	0.47 (12.0)	2.05 (52.0)	0.47 (12.0)	0.63 (16.0)	3.35 (85.0)
-FN-MT12-6	12 mm	12 mm	0.25 (6.4)	0.70	1.42 (36.0)	1.42 (36.0)	0.51 (13.0)	2.17 (55.0)	0.51 (13.0)	0.71 (18.0)	3.62 (92.0)
-FN-MT14-6	14 mm	14 mm	0.25 (6.4)	0.70	1.57 (40.0)	1.57 (40.0)	0.51 (13.0)	2.17 (55.0)	0.51 (13.0)	0.71 (18.0)	3.62 (92.0)
-FN-MT18-7	18 mm	18 mm	0.29 (7.5)	0.95	1.81 (46.0)	1.81 (46.0)	0.63 (16.0)	2.17 (55.0)	0.63 (16.0)	0.79 (20.0)	3.78 (96.0)
-FN-MT20-7	20 mm	20 mm	0.29 (7.5)	0.95	1.89 (48.0)	1.89 (48.0)	0.63 (16.0)	2.17 (55.0)	0.63 (16.0)	0.79 (20.0)	3.78 (96.0)
-FN-MT25-9	25 mm	25 mm	0.36 (9.1)	1.60	2.05 (52.0)	2.05 (52.0)	0.71 (18.0)	2.36 (60.0)	0.71 (18.0)	0.79 (20.0)	3.94 (100)

1. Sizes and types listed are standard. Other sizes and types are available upon request, refer to the ordering information.
2. Dimensions are shown with nuts finger-tightened. All dimensions are for reference only and are subject to change.
3. For dimensions not shown above, please contact the authorized representative or the company employees.

Pressure vs. Temperature

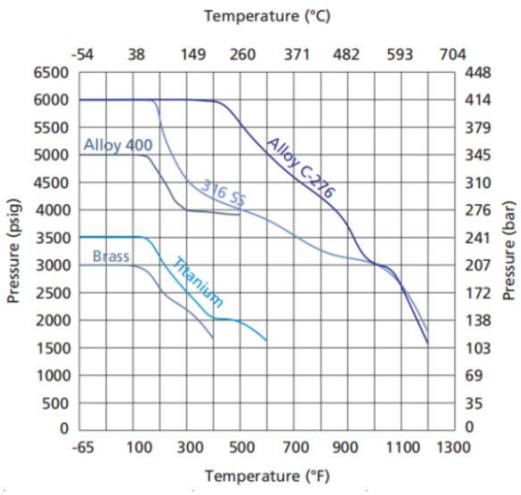

Flow Data at 100°F (38°C)

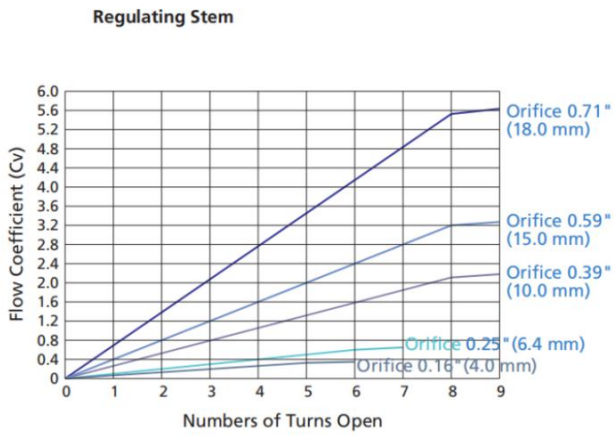

Forged Needle Valves

FNH Series: Maximum working pressure 10000 psig

Features

- One-piece forged body.
- Two-stem design: thread hardened upper stem and smooth surface hardened lower stem.
- Linearly instead of helical movement of the nonrotating lower stem, avoiding galling damage to the seat and tip, as well as reducing the total friction area between the packing and the lower stem.
- Panel mounting available as an option.
- Steady and durable fastening of the handle by double lock-pins.
- Handle color options are available.
- Leak-tight performance testing for every valve with nitrogen at the maximum working pressure.
- Maximum working pressure:
  NFH Series—Stainless steel: 10000 psig (689 bar)
- Working temperature:
  PTFE: -65°F to 450°F (-54°C to 232°C)
  PEEK: -65°F to 500°F (-54°C to 260°C)
  Graphite: -65°F to 820°F (-54°C to 454°C)

Standard Materials of Construction

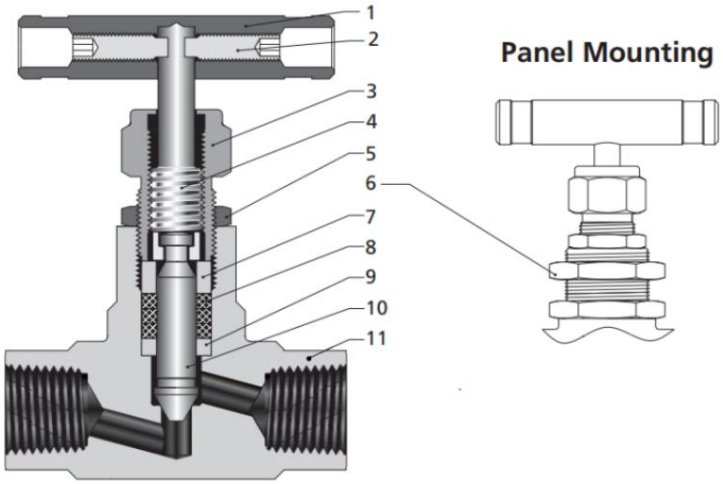

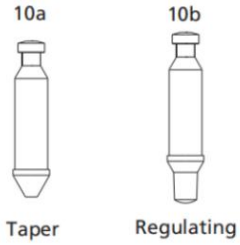

Item	Component	Valve Body Material		
		316 SS	F91	F92
1	Handle	Anodized aluminum or stainless steel or black knob		
2	Set Screw	Stainless steel		
3	Packing Bolt	304 SS/A276		
4	Upper Stem	316 SS/A276	F91/A182	F92/A182
5	Lock Nut	316 SS/B783		
6	Panel Nut	17-4PH		
7	Gland	316 SS/A276	F91/A182	F92/A182
8	Packing	PTFE or PEEK or graphite		
9	Packing Washer	316 SS/A276	F91/A182	F92/A182
10a 10b	Lower Stem	Chrome-plated 316 SS/A276	Chrome-plated F91/A182	Chrome-plated F92/A182
11	Body	316 SS/A182	F91/A182	F92/A182

Dimensions

Straight Pattern

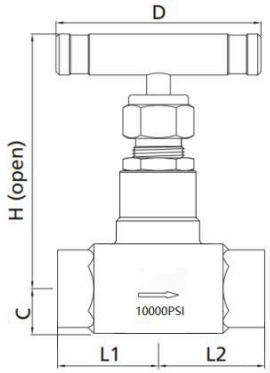

Angle Pattern

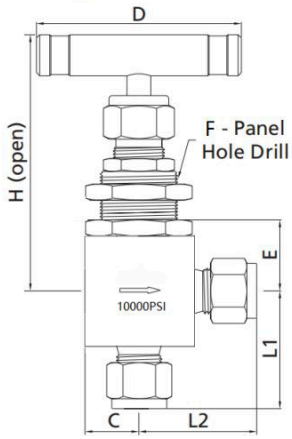

Dimensions of FNH Series

Basic Ordering Number	Connection Type and Size		Orifice	Cv	Dimension, in.(mm)						
	Inlet	Outlet	in(mm)		L1	L2	C	D	E	F	H
-FNH-FN2-3	1/8 Female NPT	1/8 Female NPT	0.12 (3.0)	0.20	1.00 (25.4)	1.008 (25.4)	0.53 (13.5)	2.17 (55.0)	0.71 (18.0)	0.77 (19.6)	2.85 (72.5)
-FNH-FN4-4	1/4 Female NPT	1/4 Female NPT	0.16 (4.0)	0.35	1.06 (27.0)	1.06 (27.0)	0.53 (13.5)	2.17 (55.0)	0.71 (18.0)	0.77 (19.6)	2.85 (72.5)
-FNH-FN6-5	3/8 Female NPT	3/8 Female NPT	0.20 (5.1)	0.56	1.14 (29.0)	1.14 (29.0)	0.62 (15.8)	2.50 (63.5)	0.87 (22.0)	0.96 (24.4)	3.38 (85.8)
-FNH-FN8-6	1/2 Female NPT	1/2 Female NPT	0.25 (6.4)	0.70	1.26 (32.0)	1.26 (32.0)	0.62 (15.8)	2.50 (63.5)	0.87 (22.0)	0.96 (24.4)	3.38 (85.8)
-FNH-FN8-7			0.29 (7.5)	0.95	1.26 (32.0)	1.26 (32.0)	0.62 (15.8)	2.50 (63.5)	0.87 (22.0)	0.96 (24.4)	3.38 (85.8)
-FNH-FN12-9	3/4 Female NPT	3/4 Female NPT	0.36 (9.1)	1.60	1.58 (40.0)	1.58 (40.0)	0.80 (20.2)	3.50 (88.9)	1.10 (28.3)	1.08 (27.5)	3.78 (96.0)
-FNH-FN16-12	1 Female NPT	1 Female NPT	0.48 (12.2)	2.65	1.97 (50.0)	1.97 (50.0)	1.30 (33.0)	5.00 (127)	1.61 (41.0)	1.45 (36.8)	6.50 (165)
-FNH-MN2-3	1/8 Male NPT	1/8 Male NPT	0.12 (3.0)	0.20	1.00 (25.4)	1.008 (25.4)	0.53 (13.5)	2.17 (55.0)	0.71 (18.0)	0.77 (19.6)	2.85 (72.5)
-FNH-MN4-4	1/4 Male NPT	1/4 Male NPT	0.16 (4.0)	0.35	1.06 (27.0)	1.06 (27.0)	0.53 (13.5)	2.17 (55.0)	0.71 (18.0)	0.77 (19.6)	2.85 (72.5)
-FNH-MN6-5	3/8 Male NPT	3/8 Male NPT	0.20 (5.1)	0.56	1.14 (29.0)	1.14 (29.0)	0.62 (15.8)	2.50 (63.5)	0.87 (22.0)	0.96 (24.4)	3.38 (85.8)
-FNH-MN8-6	1/2 Male NPT	1/2 Male NPT	0.25 (6.4)	0.70	1.50 (38.1)	1.50 (38.1)	0.62 (15.8)	2.50 (63.5)	0.87 (22.0)	0.96 (24.4)	3.38 (85.8)
-FNH-MN12-7	3/4 Male NPT	3/4 Male NPT	0.29 (7.5)	0.95	1.58 (40.0)	1.58 (40.0)	0.80 (20.2)	3.50 (88.9)	1.10 (28.3)	1.08 (27.5)	3.78 (96.0)
-FNH-MN16-9	1 Male NPT	1 Male NPT	0.36 (9.1)	1.60	1.97 (50.0)	1.97 (50.0)	1.30 (33.0)	5.00 (127)	1.61 (41.0)	1.45 (36.8)	6.50 (165)
-FNH-SW2-3	1/8 Soket Weld	1/8 Soket Weld	0.12 (3.0)	0.20	0.94 (23.8)	0.94 (23.8)	0.53 (13.5)	2.17 (55.0)	0.71 (18.0)	0.77 (19.6)	2.85 (72.5)
-FNH-SW4-4	1/4 Soket Weld	1/4 Soket Weld	0.16 (4.0)	0.35	1.00 (25.4)	1.00 (25.4)	0.53 (13.5)	2.17 (55.0)	0.71 (18.0)	0.77 (19.6)	2.85 (72.5)
-FNH-SW6-5	3/8 Soket Weld	3/8 Soket Weld	0.20 (5.1)	0.56	1.06 (27.0)	1.06 (27.0)	0.62 (15.8)	2.50 (63.5)	0.87 (22.0)	0.96 (24.4)	3.38 (85.8)
-FNH-SW8-6	1/2 Soket Weld	1/2 Soket Weld	0.25 (6.4)	0.70	1.14 (29.0)	1.14 (29.0)	0.62 (15.8)	2.50 (63.5)	0.87 (22.0)	0.96 (24.4)	3.38 (85.8)
-FNH-SW12-9	3/4 Soket Weld	3/4 Soket Weld	0.36 (9.1)	1.60	1.26 (32.0)	1.26 (32.0)	0.80 (20.2)	3.50 (88.9)	1.10 (28.3)	1.08 (27.5)	3.78 (96.0)
-FNH-SW16-12	1 Soket Weld	1 Soket Weld	0.48 (12.2)	2.65	1.58 (40.0)	1.58 (40.0)	1.30 (33.0)	5.00 (127)	1.61 (41.0)	1.45 (36.8)	6.50 (165)

Dimensions of FNH Series

Basic Ordering Number	Connection Type and Size		Orifice in(mm)	Cv	Dimension, in.(mm)						
	Inlet	Outlet			L1	L2	C	D	E	F	H
-FNH-FT2-2	1/8″ Tube	1/8″ Tube	0.08 (2.0)	0.09	1.00 (25.4)	1.00 (25.4)	0.53 (13.5)	2.17 (55.0)	0.71 (18.0)	0.77 (19.6)	2.85 (72.5)
-FNH-FT4-4	1/4″ Tube	1/4″ Tube	0.16 (4.0)	0.35	1.00 (25.4)	1.00 (25.4)	0.53 (13.5)	2.17 (55.0)	0.71 (18.0)	0.77 (19.6)	2.85 (72.5)
-FNH-FT6-6	3/8″ Tube	3/8″ Tube	0.20 (5.1)	0.56	1.44 (36.5)	1.30 (33.0)	0.62 (15.8)	2.50 (63.5)	0.87 (22.0)	0.96 (24.4)	3.38 (85.8)
-FNH-FT8-6	1/2″ Tube	1/2″ Tube	0.25 (6.4)	0.70	1.50 (38.1)	1.50 (38.1)	0.62 (15.8)	2.50 (63.5)	0.87 (22.0)	0.96 (24.4)	3.38 (85.8)
-FNH-FT12-10	3/4″ Tube	3/4″ Tube	0.29 (7.5)	0.95	1.97 (50.0)	1.97 (50.0)	0.80 (20.2)	3.50 (88.9)	1.10 (28.3)	1.08 (27.5)	3.78 (96.0)
-FNH-FT16-15	1″ Tube	1″ Tube	0.36 (9.1)	1.60	2.35 (59.7)	2.35 (59.7)	1.30 (33.0)	5.00 (127)	1.61 (41.0)	1.45 (36.8)	6.50 (165)
-FNH-MT3-2	3 mm	3 mm	0.08 (2.0)	0.09	1.00 (25.4)	1.00 (25.4)	0.53 (13.5)	2.17 (55.0)	0.71 (18.0)	0.77 (19.6)	2.85 (72.5)
-FNH-MT6-4	6 mm	6 mm	0.16 (4.0)	0.35	1.00 (25.4)	1.00 (25.4)	0.53 (13.5)	2.17 (55.0)	0.71 (18.0)	0.77 (19.6)	2.85 (72.5)
-FNH-MT8-4	8 mm	8 mm	0.16 (4.0)	0.35	1.00 (25.4)	1.00 (25.4)	0.53 (13.5)	2.17 (55.0)	0.71 (18.0)	0.77 (19.6)	2.85 (72.5)
-FNH-MT10-5	10 mm	10 mm	0.20 (5.1)	0.56	1.50 (38.1)	1.50 (38.1)	0.62 (15.8)	2.50 (63.5)	0.87 (22.0)	0.96 (24.4)	3.38 (85.8)
-FNH-MT12-6	12 mm	12 mm	0.25 (6.4)	0.70	1.50 (38.1)	1.50 (38.1)	0.62 (15.8)	2.50 (63.5)	0.87 (22.0)	0.96 (24.4)	3.38 (85.8)
-FNH-MT14-6	14 mm	14 mm	0.25 (6.4)	0.70	1.50 (38.1)	1.50 (38.1)	0.62 (15.8)	2.50 (63.5)	0.87 (22.0)	0.96 (24.4)	3.38 (85.8)
-FNH-MT18-7	18 mm	18 mm	0.29 (7.5)	0.95	1.97 (50.0)	1.97 (50.0)	0.80 (20.2)	3.50 (88.9)	1.10 (28.3)	1.08 (27.5)	3.78 (96.0)
-FNH-MT20-7	20 mm	20 mm	0.29 (7.5)	0.95	1.97 (50.0)	1.97 (50.0)	0.80 (20.2)	3.50 (88.9)	1.10 (28.3)	1.08 (27.5)	3.78 (96.0)
-FNH-MT25-9	25 mm	25 mm	0.36 (9.1)	1.60	2.35 (59.7)	2.35 (59.7)	1.30 (33.0)	5.00 (127)	1.61 (41.0)	1.45 (36.8)	6.50 (165)

1. Sizes and types listed are standard. Other sizes and types are available upon request, refer to the ordering information.
2. Dimensions are shown with nuts finger-tightened. All dimensions are for reference only and are subject to change.
3. For dimensions not shown above, please contact the authorized representative or the company employees.

Pressure vs. Temperature

FNH Series

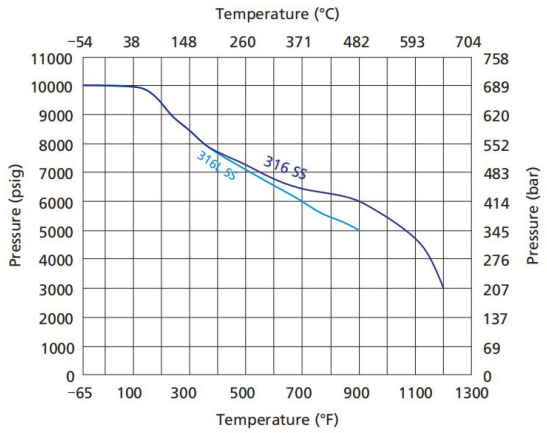

Flow Data at 100°F (38°C)

Regulating Stem

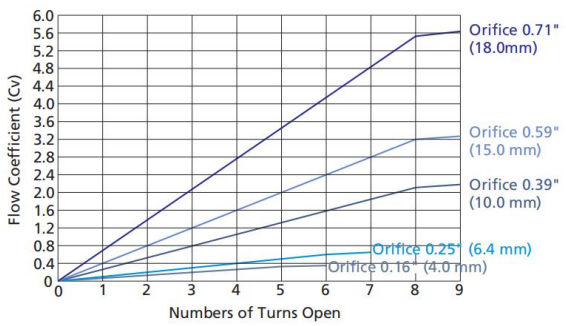

Union Bonnet Needle Valves

UN Series: Maximum working pressure 6000 psig

UNH Series: Maximum working pressure 10000 psig

Features

- One-piece forged body.
- Two-stem design: thread hardened upper stem and smooth surface hardened lower stem.
- Accidental valve disassembly disabled by union bonnet construction.
- Upper stem thread lubricant isolated from system media. Linearly instead of helical movement of the nonrotating lower stem, avoiding galling damage to the seat and tip, as well as reducing the total friction area between the packing and the lower stem.
- Safety back seating seal in fully open position.
- Panel mounting available as an option.
- Steady and durable fastening of the handle by double lock-pins.
- Handle color options are available.
- Leak-tight performance testing for every valve with nitrogen at the maximum working pressure.
- Maximum working pressure:
  UN Series—Stainless steel: 6000 psig (414 bar)
  UNH Series—Stainless steel: 10000 psig (689 bar)
- Working temperature:
  PTFE: -65°F to 450°F (-54°C to 232°C)
  PEEK: -65°F to 500°F (-54°C to 260°C)
  Graphite: -65°F to 1200°F (-54°C to 649°C)

Standard Materials of Construction

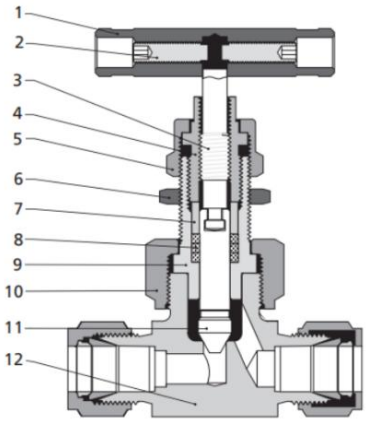

Stem Type

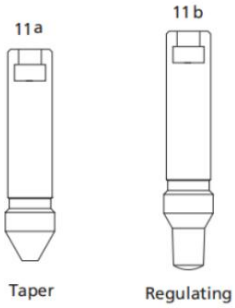

Item	Component	Valve Body Material			
		316 SS	Alloy 400	Titanium	Alloy C-276
1	Handle	Anodized aluminium or stainless steel or black knob			
2	Set Screw	Stainless steel			
3	Upper Stem	316 SS/A276			
4	Packing Bolt	321 SS/A276			
5	Lock Nut	316 SS/A276			
6	Panel Nut	316 SS/B783			
7	Gland	316 SS/A276	Alloy R-405/B164	Titanium Gr 4/B348	Alloy C-276/B574
8	Packing	PTFE or PEEK or graphite			
9	Bonnet	316 SS/A479	Alloy R-405/B164	Titanium Gr 4/B348	Alloy C-276/B574
10	Union Nut	316 SS/A276			
11a 11b	Lower Stem	316 SS/A276	Alloy R-405/B164	Titanium Gr 4/B348	Alloy C-276/B574
12	Body	316 SS/A182	Alloy 400/B164,	Titanium Gr 4/B348	Alloy C-276/B564

Dimensions of UN Series

Straight Pattern

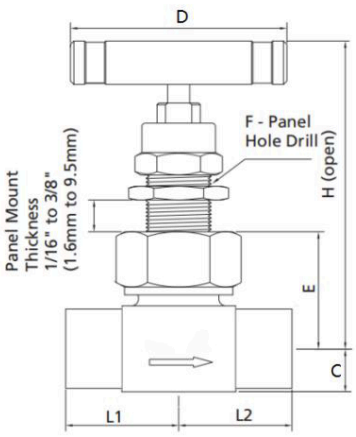

Angle Pattern

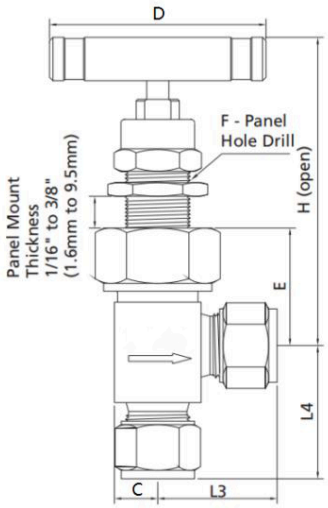

Dimensions of UN Series

Basic Ordering Number	Connection Type and Size		Orifice	Cv	Dimension, in.(mm)								
	Inlet	Outlet	In.(mm)		L1	L2	L3	L4	C	D	E	F	H
-UN-FN2-4	1/8 Female NPT	1/8 Female NPT	0.16 (4.0)	0.35	1.00 (25.4)	1.00 (25.4)	0.89 (22.6)	1.00 (25.4)	0.39 (10.0)	1.77 (45.0)	1.09 (27.7)	0.59 (15.0)	3.04 (77.2)
-UN-FN4-4	1/4 Female NPT	1/4 Female NPT	0.16 (4.0)	0.35	1.03 (26.2)	1.03 (26.2)	0.89 (22.6)	1.00 (25.4)	0.39 (10.0)	1.77 (45.0)	1.09 (27.7)	0.59 (15.0)	3.04 (77.2)
-UN-FN6-6	3/8 Female NPT	3/8 Female NPT	0.25 (6.4)	0.80	1.13 (28.6)	1.13 (28.6)	1.00 (25.4)	1.13 (28.6)	0.50 (12.7)	2.50 (63.5)	1.34 (34.0)	0.78 (19.8)	3.70 (94.0)
-UN-FN8-10	1/2 Female NPT	1/2 Female NPT	0.39 (10.0)	1.80	1.56 (39.6)	1.56 (39.6)	1.31 (33.3)	1.56 (39.6)	0.78 (19.8)	3.50 (88.9)	1.91 (48.5)	1.03 (26.2)	4.85 (123)
-UN-FN12-10	3/4 Female NPT	3/4 Female NPT	0.39 (10.0)	1.80	1.63 (41.3)	1.63 (41.3)	-	-	0.78 (19.8)	3.50 (88.9)	1.91 (48.5)	1.03 (26.2)	4.85 (123)
-UN-FN16-10	1 Female NPT	1 Female NPT	0.39 (10.0)	1.80	1.81 (46.0)	1.81 (46.0)	-	-	1.00 (25.4)	3.50 (88.9)	2.13 (54.0)	1.03 (26.2)	5.10 (129)
-UN-MN2-4	1/8 Male NPT	1/8 Male NPT	0.16 (4.0)	0.35	1.00 (25.4)	1.00 (25.4)	0.89 (22.6)	1.00 (25.4)	0.39 (10.0)	1.77 (45.0)	1.09 (27.7)	0.59 (15.0)	3.04 (77.2)
-UN-MN4-4	1/4 Male NPT	1/4 Male NPT	0.16 (4.0)	0.35	1.03 (26.2)	1.03 (26.2)	0.89 (22.6)	1.00 (25.4)	0.39 (10.0)	1.77 (45.0)	1.09 (27.7)	0.59 (15.0)	3.04 (77.2)
-UN-MN6-6	3/8 Male NPT	3/8 Male NPT	0.25 (6.4)	0.80	1.13 (28.6)	1.13 (28.6)	1.00 (25.4)	1.13 (28.6)	0.50 (12.7)	2.50 (63.5)	1.34 (34.0)	0.78 (19.8)	3.70 (94.0)
-UN-MN8-10	1/2 Male NPT	1/2 Male NPT	0.39 (10.0)	1.80	1.56 (39.6)	1.56 (39.6)	1.31 (33.3)	1.56 (39.6)	0.78 (19.8)	3.50 (88.9)	1.91 (48.5)	1.03 (26.2)	4.85 (123)
-UN-MN12-10	3/4 Male NPT	3/4 Male NPT	0.39 (10.0)	1.80	1.63 (41.3)	1.63 (41.3)	-	-	0.78 (19.8)	3.50 (88.9)	1.91 (48.5)	1.03 (26.2)	4.85 (123)
-UN-MN16-10	1 Male NPT	1 Male NPT	0.39 (10.0)	1.80	1.81 (46.0)	1.81 (46.0)	-	-	1.00 (25.4)	3.50 (88.9)	2.13 (54.0)	1.03 (26.2)	5.10 (129)
-UN-SWT4-4	1/4 Soket Weld	1/4 Soket Weld	0.16 (4.0)	0.35	0.91 (23.1)	0.91 (23.1)	0.88 (22.4)	1.19 (30.2)	0.39 (10.0)	1.77 (45.0)	1.09 (27.7)	0.59 (15.0)	3.04 (77.2)
-UN-SWT6-6	3/8 Soket Weld	3/8 Soket Weld	0.25 (6.4)	0.80	1.13 (28.6)	1.13 (28.6)	1.00 (25.4)	1.13 (28.6)	0.50 (12.7)	2.50 (63.5)	1.34 (34.0)	0.78 (19.8)	3.70 (94.0)
-UN-SWT8-6	1/2 Soket Weld	1/2 Soket Weld	0.25 (6.4)	0.80	1.13 (28.6)	1.13 (28.6)	1.00 (25.4)	1.13 (28.6)	0.50 (12.7)	2.50 (63.5)	1.34 (34.0)	0.78 (19.8)	3.70 (94.0)
-UN-SWT12-10	3/4 Soket Weld	3/4 Soket Weld	0.39 (10.0)	1.80	1.56 (39.7)	1.56 (39.7)	1.31 (33.3)	1.69 (42.9)	0.78 (19.8)	3.50 (88.9)	1.91 (48.5)	1.03 (26.2)	4.85 (123)
-UN-SWT16-15	1 Soket Weld	1 Soket Weld	0.39 (10.0)	1.80	1.63 (41.3)	1.63 (41.3)	-	-	1.00 (25.4)	3.50 (88.9)	2.13 (54.0)	1.03 (26.2)	5.10 (129)
-UN-SWM12-6	12 mm SW	12 mm SW	0.25 (6.4)	0.80	1.13 (28.6)	1.13 (28.6)	1.00 (25.4)	1.13 (28.6)	0.50 (12.7)	2.50 (63.5)	1.34 (34.0)	0.78 (19.8)	3.70 (94.0)
-UN-SWM14-6	14 mm SW	14 mm SW	0.25 (6.4)	0.80	1.13 (28.6)	1.13 (28.6)	1.00 (25.4)	1.13 (28.6)	0.50 (12.7)	2.50 (63.5)	1.34 (34.0)	0.78 (19.8)	3.70 (94.0)
-UN-SWM16-10	16 mm SW	16 mm SW	0.39 (10.0)	1.80	1.56 (39.7)	1.56 (39.7)	1.31 (33.3)	1.69 (42.9)	0.78 (19.8)	3.50 (88.9)	1.91 (48.5)	1.03 (26.2)	4.85 (123)
-UN-SWM20-10	20 mm SW	20 mm SW	0.39 (10.0)	1.80	1.56 (39.7)	1.56 (39.7)	1.31 (33.3)	1.69 (42.9)	0.78 (19.8)	3.50 (88.9)	1.91 (48.5)	1.03 (26.2)	4.85 (123)
-UN-SWM25-10	25 mm SW	25 mm SW	0.39 (10.0)	1.80	1.63 (41.3)	1.63 (41.3)	-	-	1.00 (25.4)	3.50 (88.9)	2.13 (54.0)	1.03 (26.2)	5.10 (129)

Dimensions of UN Series

Basic Ordering Number	Connection Type and Size		Orifice	Cv	Dimension, in.(mm)								
	Inlet	Outlet	In.(mm)		L1	L2	L3	L4	C	D	E	F	H
-UN-BWM14-6	14 mm BW	14 mm BW	0.25 (6.4)	0.80	1.13 (28.6)	1.13 (28.6)	1.00 (25.4)	1.13 (28.6)	0.50 (12.7)	2.50 (63.5)	1.34 (34.0)	0.78 (19.8)	3.70 (94.0)
-UN-BWM16-10	16 mm BW	16 mm BW	0.25 (6.4)	0.80	1.56 (39.7)	1.56 (39.7)	1.31 (33.3)	1.69 (42.9)	0.78 (19.8)	3.50 (88.9)	1.91 (48.5)	1.03 (26.2)	4.85 (123)
-UN-BWM20-10	20 mm BW	20 mm BW	0.39 (10.0)	1.80	1.56 (39.7)	1.56 (39.7)	1.31 (33.3)	1.69 (42.9)	0.78 (19.8)	3.50 (88.9)	1.91 (48.5)	1.03 (26.2)	4.85 (123)
-UN-BWM25-10	25 mm BW	25 mm BW	0.39 (10.0)	1.80	1.63 (41.3)	1.63 (41.3)	-	-	1.00 (25.4)	3.50 (88.9)	2.13 (54.0)	1.03 (26.2)	5.10 (129)
-UN-FT4-4	1/4" Tube	1/4" Tube	0.16 (4.0)	0.35	1.22 (30.9)	1.22 (30.9)	1.16 (29.5)	1.48 (37.6)	0.53 (13.5)	2.17 (55.0)	0.71 (18.0)	0.77 (19.6)	2.85 (72.5)
-UN-FT6-6	3/8" Tube	3/8" Tube	0.16 (4.0)	0.35	1.41 (35.9)	1.41 (35.9)	1.59 (32.8)	1.66 (42.2)	0.62 (15.8)	2.50 (63.5)	0.87 (22.0)	0.96 (24.4)	3.38 (85.8)
-UN-FT8-6	1/2" Tube	1/2" Tube	0.25 (6.4)	0.70	1.52 (38.6)	1.52 (38.6)	1.59 (32.8)	1.66 (42.2)	0.62 (15.8)	2.50 (63.5)	0.87 (22.0)	0.96 (24.4)	3.38 (85.8)
-UN-FT12-10	3/4" Tube	3/4" Tube	0.39 (10.0)	2.20	1.97 (50.0)	1.97 (50.0)	1.68 (42.7)	2.08 (51.8)	0.80 (20.2)	3.50 (88.9)	1.10 (28.3)	1.08 (27.5)	3.78 (96.0)
-UN-FT16-15	1" Tube	1" Tube	0.59 (15.0)	3.30	2.04 (51.8)	2.04 (51.8)	-	-	1.30 (33.0)	5.00 (127)	1.61 (41.0)	1.45 (36.8)	6.50 (165)
-UN-MT6-4	6 mm	6 mm	0.16 (4.0)	0.35	1.22 (30.9)	1.22 (30.9)	1.16 (29.5)	1.48 (37.6)	0.53 (13.5)	2.17 (55.0)	0.71 (18.0)	0.77 (19.6)	2.85 (72.5)
-UN-MT8-4	8 mm	8 mm	0.16 (4.0)	0.35	1.22 (30.9)	1.22 (30.9)	1.16 (29.5)	1.48 (37.6)	0.53 (13.5)	2.17 (55.0)	0.71 (18.0)	0.77 (19.6)	2.85 (72.5)
-UN-MT10-6	10 mm	10 mm	0.16 (4.0)	0.35	1.41 (35.9)	1.41 (35.9)	1.59 (32.8)	1.66 (42.2)	0.62 (15.8)	2.50 (63.5)	0.87 (22.0)	0.96 (24.4)	3.38 (85.8)
-UN-MT12-6	12 mm	12 mm	0.25 (6.4)	0.70	1.52 (38.6)	1.52 (38.6)	1.59 (32.8)	1.66 (42.2)	0.62 (15.8)	2.50 (63.5)	0.87 (22.0)	0.96 (24.4)	3.38 (85.8)
-UN-MT14-6	14 mm	14 mm	0.25 (6.4)	0.70	1.41 (35.9)	1.41 (35.9)	1.59 (32.8)	1.66 (42.2)	0.62 (15.8)	2.50 (63.5)	0.87 (22.0)	0.96 (24.4)	3.38 (85.8)
-UN-MT18-10	18 mm	18 mm	0.39 (10.0)	2.20	1.52 (38.6)	1.52 (38.6)	1.59 (32.8)	1.66 (42.2)	0.62 (15.8)	2.50 (63.5)	0.87 (22.0)	0.96 (24.4)	3.38 (85.8)
-UN-MT20-10	20 mm	20 mm	0.39 (10.0)	2.20	1.97 (50.0)	1.97 (50.0)	1.68 (42.7)	2.08 (51.8)	0.80 (20.2)	3.50 (88.9)	1.10 (28.3)	1.08 (27.5)	3.78 (96.0)
-UN-MT25-15	25 mm	25 mm	0.59 (15.0)	3.30	2.04 (51.8)	2.04 (51.8)	-	-	1.30 (33.0)	5.00 (127)	1.61 (41.0)	1.45 (36.8)	6.50 (165)

UNH Series

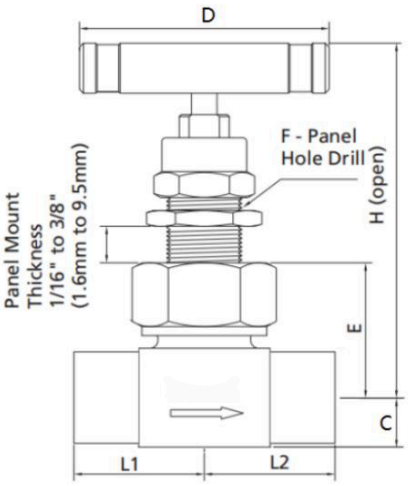

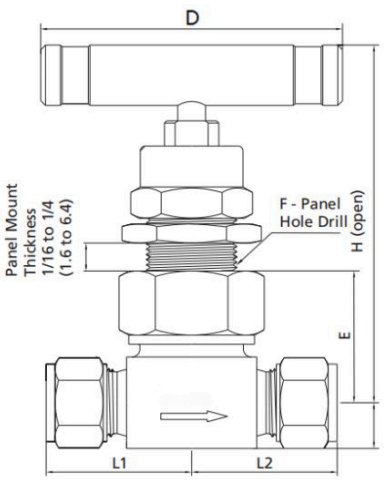

Dimensions of UNH Series

Basic Ordering Number	Connection Type and Size		Orifice	Cv	Dimension, in.(mm)						
	Inlet	Outlet	in(mm)		L1	L2	C	D	E	F	H
-UNH-FN2-4	1/8 Female NPT	1/8 Female NPT	0.16 (4.0)	0.35	1.00 (25.4)	1.00 (25.4)	0.50 (12.7)	2.50 (63.5)	1.34 (34.0)	0.78 (19.8)	3.31 (84.0)
-UNH-FN4-4	1/4 Female NPT	1/4 Female NPT	0.16 (4.0)	0.35	1.13 (28.6)	1.13 (28.6)	0.50 (12.7)	2.50 (63.5)	1.34 (34.0)	0.78 (19.8)	3.31 (84.0)
-UNH-FN6-6	3/8 Female NPT	3/8 Female NPT	0.25 (6.4)	0.80	1.13 (28.6)	1.13 (28.6)	0.50 (12.7)	2.50 (63.5)	1.34 (34.0)	0.78 (19.8)	3.31 (84.0)
-UNH-FN8-10	1/2 Female NPT	1/2 Female NPT	0.25 (6.4)	0.80	1.56 (39.6)	1.56 (39.6)	0.78 (19.8)	3.50 (88.9)	1.91 (48.5)	1.03 (26.2)	4.13 (105)

Basic Ordering Number	Connection Type and Size		Orifice in(mm)	Cv	Dimension, in.(mm)						
	Inlet	Outlet			L1	L2	C	D	E	F	H
-UNH-MN4-4	1/4 Male NPT	1/4 Male NPT	0.16 (4.0)	0.35	1.13 (28.6)	1.13 (28.6)	0.50 (12.7)	2.50 (63.5)	1.34 (34.0)	0.78 (19.8)	3.31 (84.0)
-UNH-MN6-6	3/8 Male NPT	3/8 Male NPT	0.16 (4.0)	0.35	1.13 (28.6)	1.13 (28.6)	0.50 (12.7)	2.50 (63.5)	1.34 (34.0)	0.78 (19.8)	3.31 (84.0)
-UNH-MN8-10	1/2 Male NPT	1/2 Male NPT	0.25 (6.4)	0.80	1.56 (39.6)	1.56 (39.6)	0.78 (19.8)	3.50 (88.9)	1.91 (48.5)	1.03 (26.2)	4.13 (105)
-UNH-SWT4-4	1/4 Soket Weld	1/4 Soket Weld	0.16 (4.0)	0.35	1.13 (28.6)	1.13 (28.6)	0.50 (12.7)	2.50 (63.5)	1.34 (34.0)	0.78 (19.8)	3.70 (94.0)
-UNH-SWT6-6	3/8 Soket Weld	3/8 Soket Weld	0.16 (4.0)	0.35	1.13 (28.6)	1.13 (28.6)	0.50 (12.7)	2.50 (63.5)	1.34 (34.0)	0.78 (19.8)	3.31 (84.0))
-UNH-SWT8-6	1/2 Soket Weld	1/2 Soket Weld	0.25 (6.4)	0.80	1.56 (39.7)	1.56 (39.7)	0.78 (19.8)	3.50 (88.9)	1.91 (48.5)	1.03 (26.2)	4.85 (123)
-UNH-SWM12-6	12 mm SW	12 mm SW	0.25 (6.4)	0.80	1.56 (39.7)	1.56 (39.7)	0.78 (19.8)	3.50 (88.9)	1.91 (48.5)	1.03 (26.2)	4.85 (123)
-UNH-SWM14-6	14 mm SW	14 mm SW	0.25 (6.4)	0.80	1.56 (39.7)	1.56 (39.7)	0.78 (19.8)	3.50 (88.9)	1.91 (48.5)	1.03 (26.2)	4.85 (123)
-UNH-FT4-4	1/4″ Tube	1/4″ Tube	0.16 (4.0)	0.35	1.13 (28.6)	1.13 (28.6)	0.50 (12.7)	2.50 (63.5)	1.34 (34.0)	0.78 (19.8)	3.31 (84.0)
-UNH-FT6-6	3/8″ Tube	3/8″ Tube	0.16 (4.0)	0.35	1.13 (28.6)	1.13 (28.6)	0.50 (12.7)	2.50 (63.5)	1.34 (34.0)	0.78 (19.8)	3.31 (84.0)
-UNH-FT8-6	1/2″ Tube	1/2″ Tube	0.25 (6.4)	0.70	1.97 (50.0)	1.97 (50.0)	0.78 (19.8)	3.50 (88.9)	1.91 (48.5)	1.03 (26.2)	4.25 (108)
-UN-MT10-6	10 mm	10 mm	0.16 (4.0)	0.35	1.13 (28.6)	1.13 (28.6)	0.50 (12.7)	2.50 (63.5)	1.34 (34.0)	0.78 (19.8)	3.31 (84.0)
-UN-MT12-6	12 mm	12 mm	0.25 (6.4)	0.70	1.97 (50.0)	1.97 (50.0)	0.78 (19.8)	3.50 (88.9)	1.91 (48.5)	1.03 (26.2)	4.25 (108)

1. Sizes and types listed are standard. Other sizes and types are available upon request, refer to the ordering information.
2. Dimensions are shown with ROKE nuts finger-tightened. All dimensions are for reference only and are subject to change.
3. For dimensions not shown above, please contact the authorized representative or ROKE employees.

Pressure vs. Temperature

UN Series

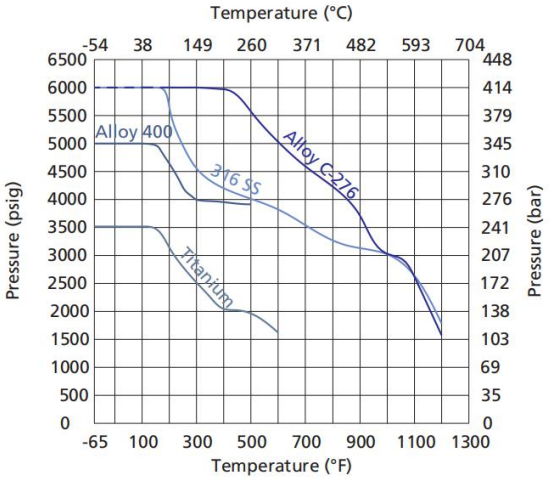

UNF Series

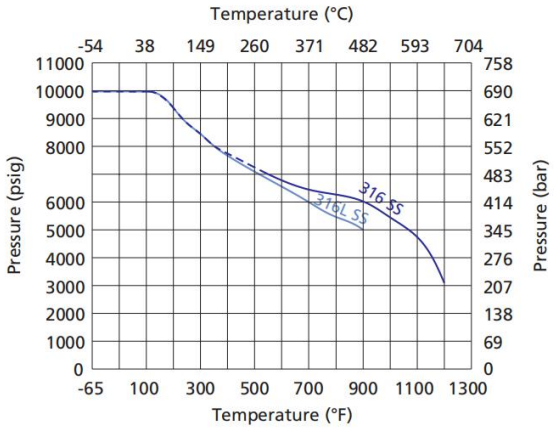

Flow Data at 100°F (37°C)

Regulating Stem

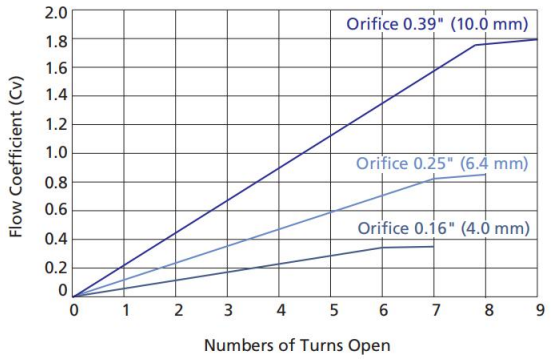

Rising Plug Valves

RP Series

RPG Series (With gauge port)

Features

◎ Nonrotating stem for longer seat life.
◎ Roddable, straight through flow path for maximum flow with minimum pressure drop.
◎ Stem thread lubricant isolated from system media.
◎ Replaceable seat and stem tip design.
◎ Stem thread protected from outside contamination by PTFE ring in the gland.
◎ Panel mounting available as an option.
◎ Handle color options are available.
◎ Leak-tight performance testing for every valve with nitrogen at the maximum working pressure.
◎ Maximum working pressure:Stainless steel: 6000 psig (414 bar)
◎ Working temperature:
Acetal: -20°F to 250°F (-28°C to 121°C)
PEEK: -20°F to 400°F (-28°C to 204°C)
PFA: -20°F to 400°F (-28°C to 204°C)

Standard Materials of Construction

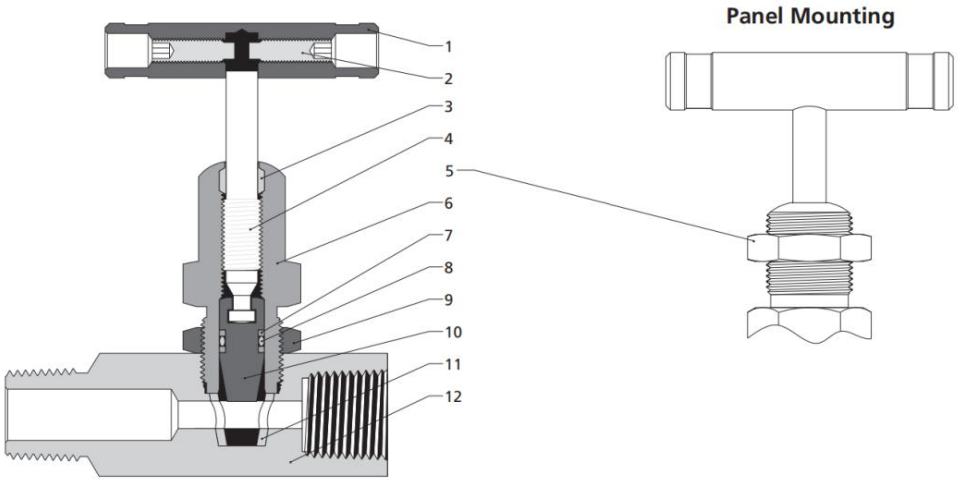

Item	Component	Valve Body Material			
		316 SS	304 SS	321 SS	Alloy R-405
1	Handle	Anodized aluminum or stainless steel or black knob			
2	Set Screw	stainless steel			
3	Wiper Ring	PTFE/D1710			
4	Upper Stem	316 SS/A276	304 SS/A276	321 SS/A276	Alloy R-405/B164
5	Panel Nut	17-4PH			
6	Bonnet	316 SS/A479	304 SS/A479	321 SS/A479	Alloy R-405/B164
7	Backup Ring	PTFE/D1710			
8	O-ring	Fluorocarbon FKM	Buna-N		Ethylene propylene
9	Lock Nut	17-4PH			
10	Stem Tip	316 SS/A276	304 SS/A276	321 SS/A276	Alloy R-405/B164
11	Seat	Acetal or PEEK or PFA			
12	Body	316 SS/A479	304 SS/A479	321 SS/A479	Alloy R-405/B164

Dimensions

Standard Pattern

RP Series

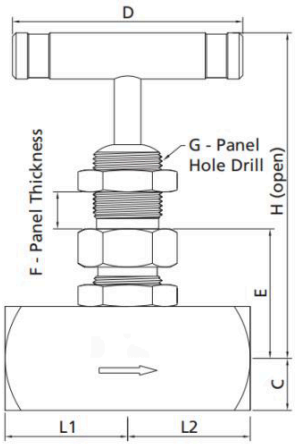

Gauge Port Pattern

RPG Series

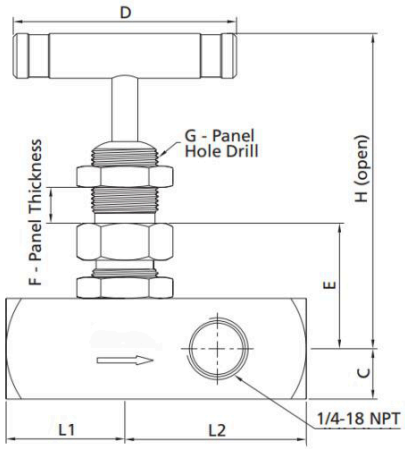

Dimensions of RP/RPG Series

Basic Ordering Number	Connection Type and Size		Orifice	Cv	Dimension, in.(mm)							
	Inlet	Outlet	in(mm)		L1	L2	C	D	E	F		H
-RP-FN4-4	1/4″ Female NPT	1/4″ Female NPT	0.16 (4.0)	0.63	1.12 (28.4)	1.13 (28.6)	0.44 (11.1)	2.17 (55.0)	1.08 (27.5)	0.25 (6.4)	0.65 (16.0)	3.77 (95.8)
-RP-MN4-FN4-4	1/4″ Male NPT	1/4″ Female NPT	0.16 (4.0)	0.63	1.12 (28.4)	1.13 (28.6)	0.44 (11.1)	2.17 (55.0)	1.08 (27.5)	0.25 (6.4)	0.65 (16.0)	3.77 (95.8)
-RP-MN8-FN4-4	1/2″ Male NPT	1/4″ Female NPT	0.16 (4.0)	0.63	1.89 (48.0)	1.13 (28.6)	0.44 (11.1)	2.17 (55.0)	1.08 (27.5)	0.25 (6.4)	0.65 (16.0)	3.77 (95.8)
-RP-FN8-6	1/2″ Female NPT	1/2″ Female NPT	0.25 (6.4)	1.80	1.33 (33.8)	1.33 (33.8)	0.56 (14.3)	2.50 (63.5)	1.40 (35.5)	0.38 (9.7)	0.77 (19.6)	3.83 (97.3)
-RP-MN8-FN8-6	1/2″ Male NPT	1/2″ Female NPT	0.25 (6.4)	1.80	2.16 (55.0)	1.33 (33.8)	0.56 (14.3)	2.50 (63.5)	1.40 (35.5)	0.38 (9.7)	0.77 (19.6)	3.83 (97.3)
-RP-MN12-FN8-6	3/4″ Male NPT	1/2″ Female NPT	0.25 (6.4)	1.80	2.16 (55.0)	1.33 (33.8)	0.56 (14.3)	2.50 (63.5)	1.40 (35.5)	0.38 (9.7)	0.77 (19.6)	3.83 (97.3)
-RPG-FN4-4	1/4″ Female NPT	1/4″ Female NPT	0.16 (4.0)	0.63	1.12 (28.4)	1.75 (44.4)	0.50 (12.7)	2.17 (55.0)	1.08 (27.5)	0.25 (6.4)	0.65 (16.0)	3.77 (95.8)
-RPG-MN8-FN4-4	1/2″ Male NPT	1/4″ Female NPT	0.16 (4.0)	0.63	1.89 (48.0)	1.75 (44.4)	0.50 (12.7)	2.17 (55.0)	1.08 (27.5)	0.25 (6.4)	0.65 (16.0)	3.77 (95.8)
-RPG-FN8-6	1/2″ Female NPT	1/2″ Female NPT	0.25 (6.4)	1.80	1.33 (33.8)	2.25 (57.2)	0.56 (14.3)	2.50 (63.5)	1.40 (35.5)	0.38 (9.7)	0.77 (19.6)	3.83 (97.3)
-RPG-MN12-FN8-6	3/4″ Male NPT	1/2″ Female NPT	0.25 (6.4)	1.80	2.16 (55.0)	2.25 (57.2)	0.56 (14.3)	2.50 (63.5)	1.40 (35.5)	0.38 (9.7)	0.77 (19.6)	3.83 (97.3)

1. Sizes and types listed are standard. Other sizes and types are available upon request, refer to the ordering information.
2. Dimensions are shown with nuts finger-tightened. All dimensions are for reference only and are subject to change.
3. For dimensions not shown above, please contact the authorized representative or the company employees.

Pressure vs. Temperature

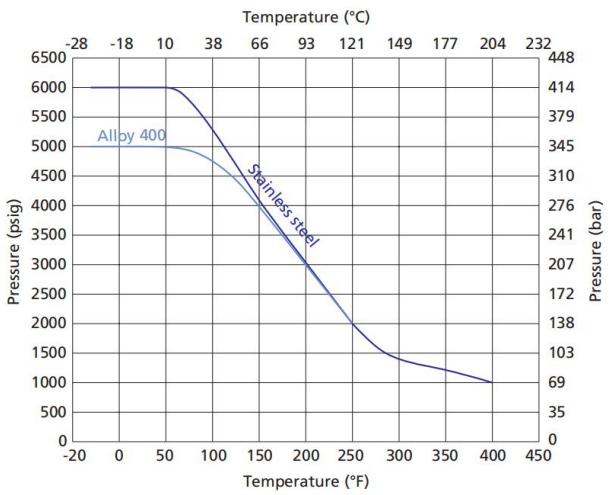

Flow Data at 100°F (38°C)

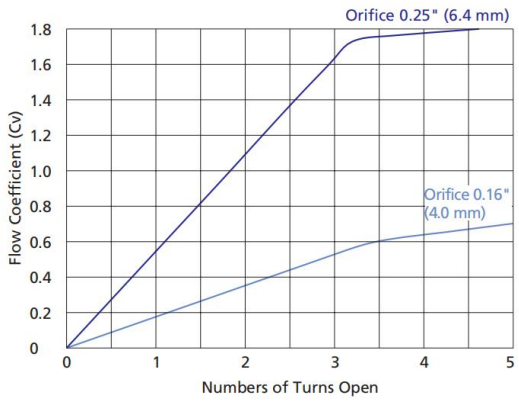

Gauge Valves

GVB Series

GVP Series

Features

- Non-rotating lower stem, ball tip and plug tip designs
- Variety of materials for seat and packing
- Safety back seating seals in fully open position
- Bonnet locking pin fitted as standard
- Low torque operating T bar handle
- Option for different colored handles
- Leak-tight performance testing for every valve with nitrogen at the maximum working pressure
- Maximum working pressure: 6000 psig (414 bar)
- GV-B series Working temperature:
  PTFE packing: -65 F to 450 F (-54 C to 232 C)
  Graphite packing: -65 F to 1200 F (-54 C to 649 C)
- GV-P series working temperature:
  Acetal seat: -20 F to 250 F (-28 C to 121 C)
  PEEK seat: -20 F to 400 F (-28 C to 204 C)

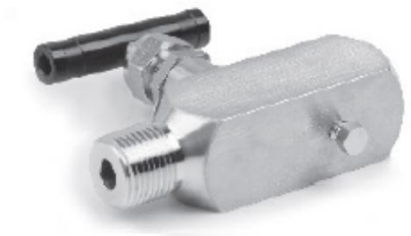

Standard Materials of Construction

Ball Tip Design Valves (GVB)

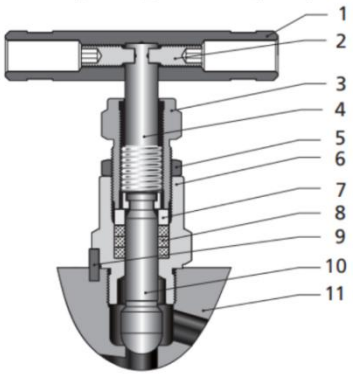

Plug Tip Design Valves (GVP)

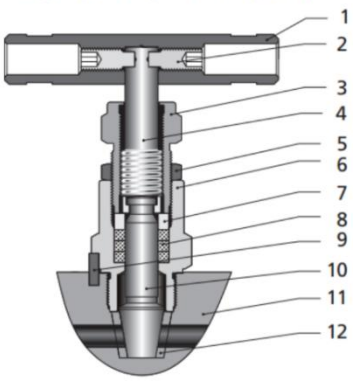

Item	Part	Valve Body Material	
		SS 316	Alloy 400
1	Handle	Anodized aluminum	
2	Set Screw	Stainless steel	
3	Packing Bolt	SS 304	
4	Upper Stem	SS 316	
5	Lock Nut	17-4PH	
6	Bonnet	SS 316	Alloy 400
7	Gland	SS316	
8	Packing	PTFE or graphite	
9	Lock Pin	Stainless steel	
10	Lower Stem	SS 316	Alloy 400
11	Body	SS 316	Alloy 400
12	Seat	Acetal or PEEK or PFA	

Miniature Type

Basic Ordering NO.	Inlet/ Process	Outlet/ Instrument	Vent	Orifice in(mm)	Cv
-GVB-MN8-FN8-M	1/2 Male NPT	1/2 Female NPT	Vent Stem	0.25 (6.4)	0.9
-GVP-MN8-FN8-M				0.25 (6.4)	1.8

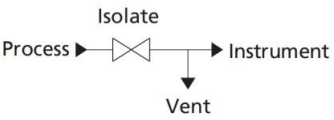

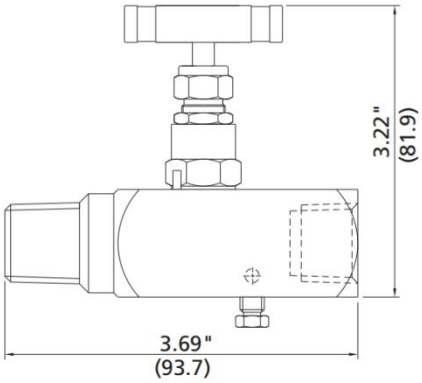

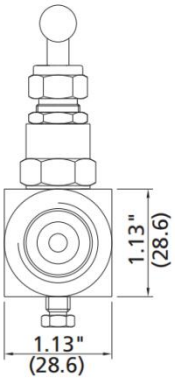

Standard Type

Basic Ordering NO.	Inlet/ Process	Outlet/ Instrument	Test/Vent /Plug	Orifice in(mm)	Cv
-GVB-MN8-FN8	1/2 Male NPT	1/2 Female NPT	1/2 Female NPT	0.25 (6.4)	1.0
-GVP-MN8-FN8				0.25 (6.4)	1.8
-GVB-MN12-FN12	3/4 Male NPT	3/4 Female NPT	1/2 Female NPT	0.25 (6.4)	1.0
-GVP-MN12-FN12				0.25 (6.4)	1.8

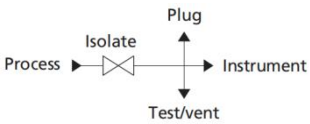

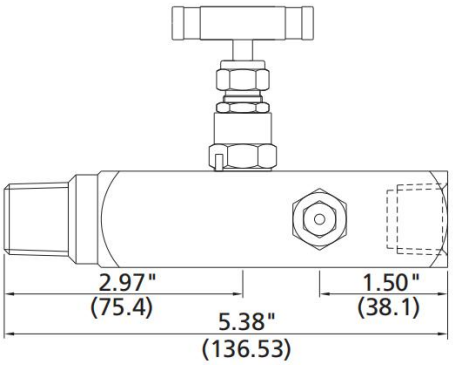

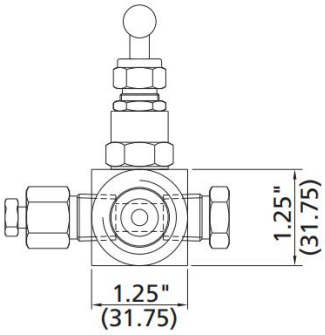

Lagging Extension Body Type

Basic Ordering NO.	Inlet/ Process	Outlet/ Instrument	Vent	Orifice in(mm)	Cv
-GVB-MN8-FN8-L	1/2 Male NPT	1/2 Female NPT	Vent Stem	0.25 (6.4)	1.2
-GVP-MN8-FN8-L				0.25 (6.4)	1.8

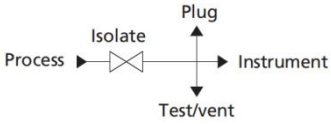

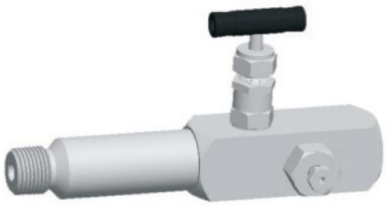

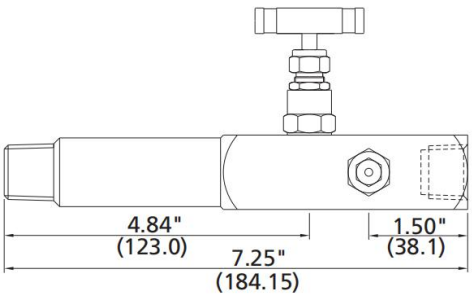

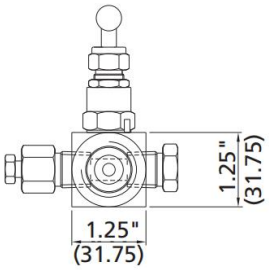

Instrumentation Manifolds

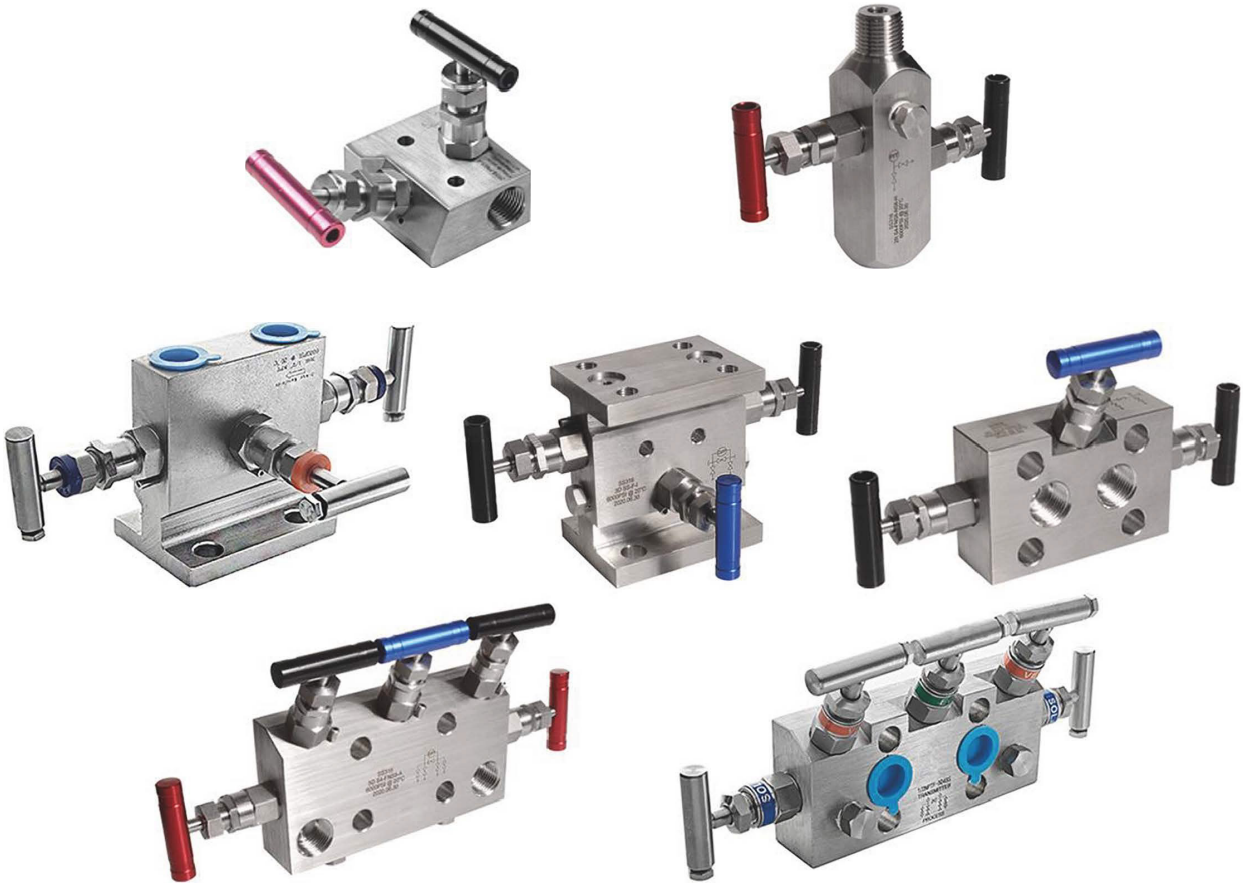

Contents

Instrumentation Manifolds

General Information

Features

◎ Maximum working pressure:
Stainless steel: up to 6000 psig (414 bar)
Alloy C-276: up to 6000 psig (414 bar)
Alloy 400: up to 5000 psig (345 bar)

◎ Working temperature:
PTFE packing: -65 F to 450 F (-54 C to 232 C)
Graphite packing: -65 F to 1200 F (-54 C to 649 C)

◎ Orifice: 0.157 (4.0 mm), CV: 0.35

◎ Leak-tight performance testing for every valve with nitrogen at the maximum working pressure.

Pressure vs. Temperature

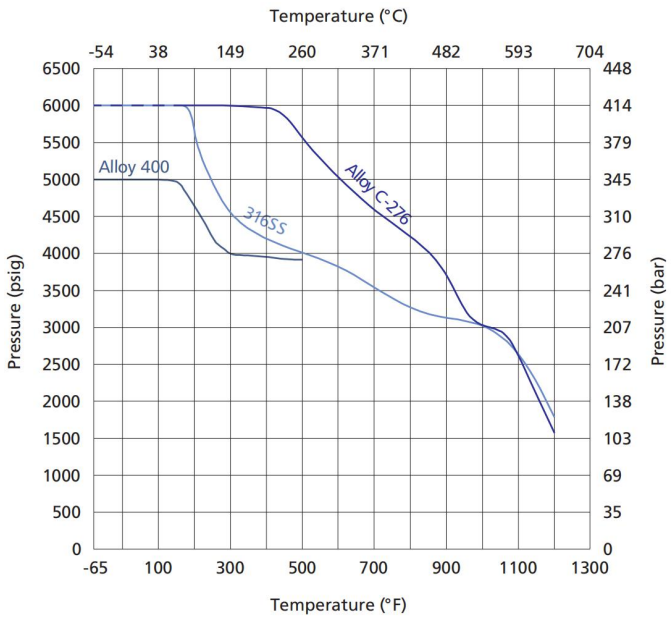

Standard Materials of Construction

Item	Part	Valve Body Material		
		316 SS	Alloy 400	Alloy C-276
1	Handle	Anodized aluminum		
2	Set Screw	Stainless steel		
3	Packing Bolt	304 SS/A276		
4	Upper Stem	316 SS/A276		
5	Lock Nut	17-4PH		
6	Bonnet	316 SS/A479	Alloy R-405/B164	Alloy C-276/B574
7	Gland	316 SS/A276		
8	Packing	PTFE or PEEK or graphite		
9	Lock Pin	304 SS/A276		
10	Lower Stem	Chrome-plated 316 SS/A276	Alloy R-405/B164	Alloy C-276/B574
11	Body	316 SS/A479 316 SS/A182	Alloy 400/B164, B127,B564	Alloy C-276/B564

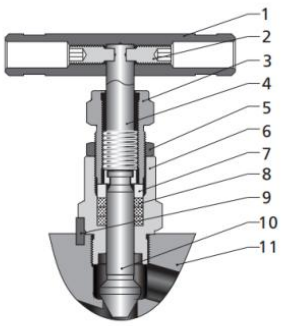

Handle color codes for functions:
BLACK=Isolate/block
RED=Test/vent
GREEN=Equalize

2-valve Manifolds

Consist of one block valve and one bleed valve

Basic Ordering NO.	Inlet/Process	Outlet/Instrument	Test/vent
2ASS-FN8-MN8	1/2 Female NPT	1/2 Male NPT	1/4 Female NPT
2ASS-MN8	1/2 Male NPT	1/2 Male NPT	1/4 Female NPT

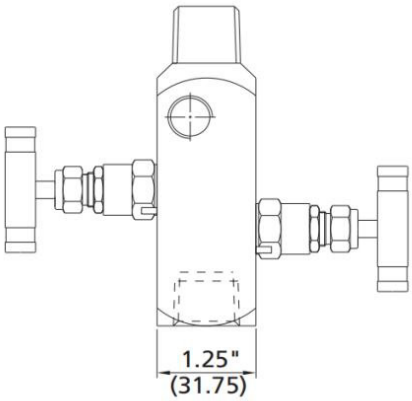

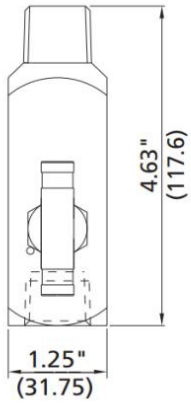

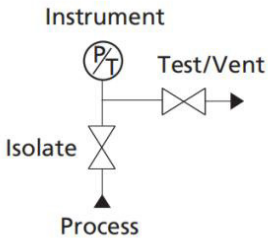

Basic Ordering NO.	Inlet/Process	Outlet/Instrument	Test/vent
2BSS-FN8	1/2 Female NPT	1/2 Female NPT	1/4 Female NPT

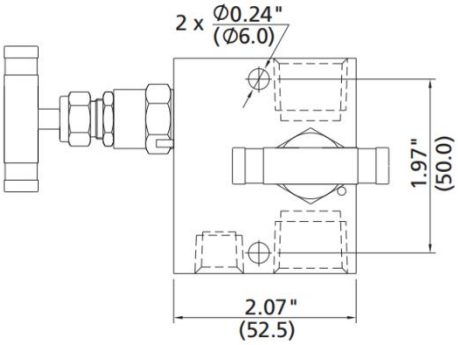

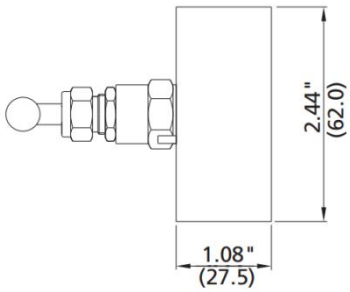

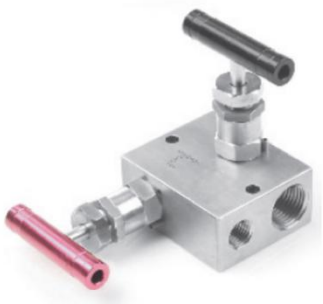

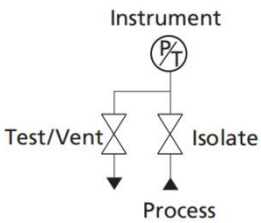

Basic Ordering NO.	Inlet/Process	Outlet/Instrument	Test/vent
2CSS-FN4	1/4 Female NPT	1/4 Female NPT	1/4 Female NPT

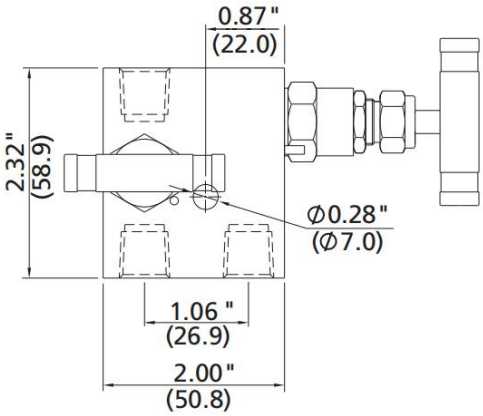

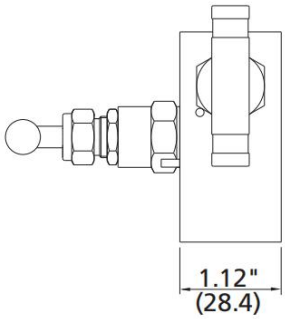

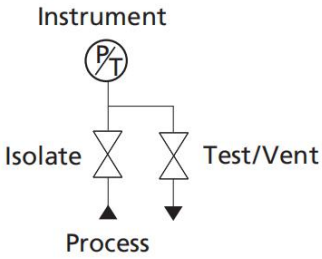

Basic Ordering NO.	Inlet/Process	Outlet/Instrument	Test/vent
2DSS-FN4	1/4 Female NPT	1/4 Female NPT	1/4 Female NPT

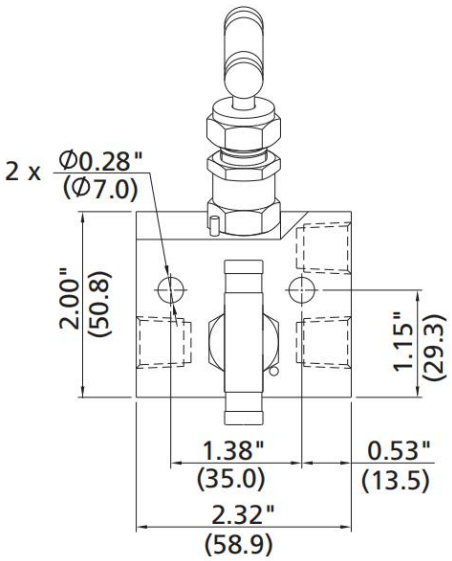

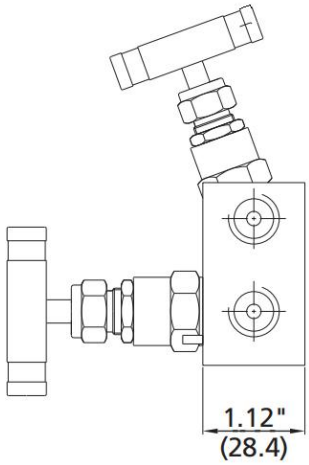

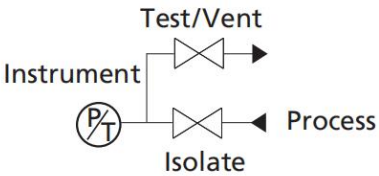

Basic Ordering NO.	Inlet/Process	Outlet/Instrument	Test/vent
2ESS-FN8	1/2 Female NPT	1/2 Female NPT	1/4 Female NPT

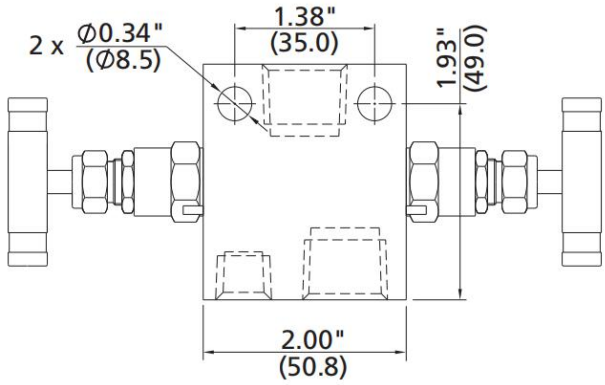

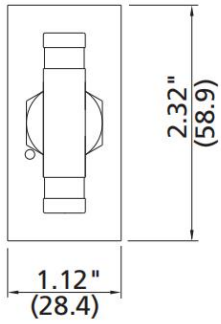

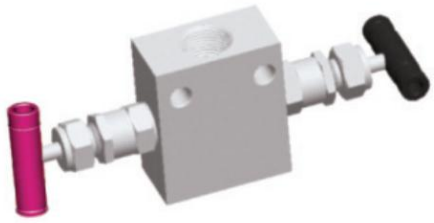

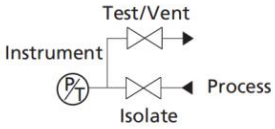

Basic Ordering NO.	Inlet/Process	Outlet/Instrument	Test/vent
2FSS-FN8-F	1/2 Female NPT	Flange	1/4 Female NPT

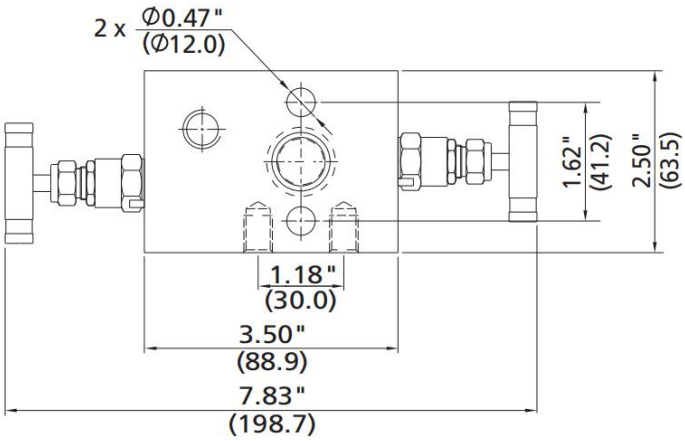

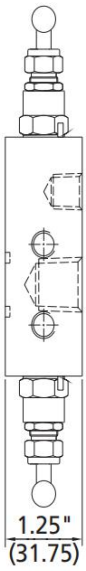

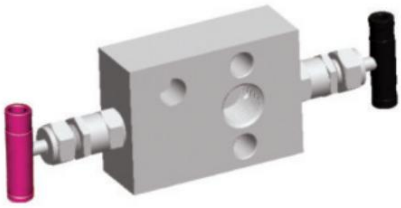

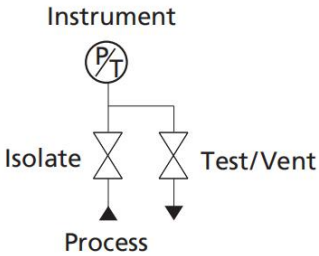

Basic Ordering NO.	Inlet/Process	Outlet/Instrument	Test/vent
2GSS-FN8-F	1/2 Female NPT	Flange	1/4 Female NPT

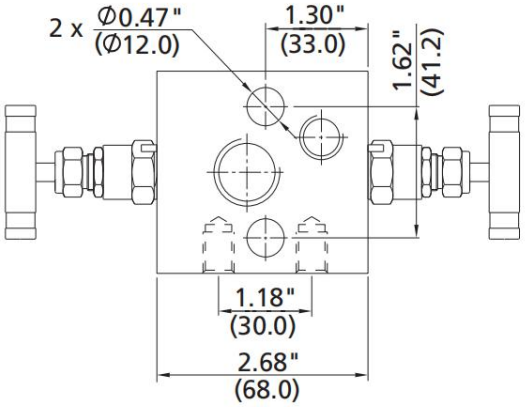

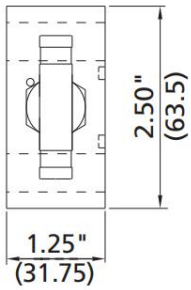

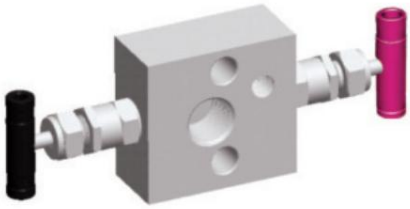

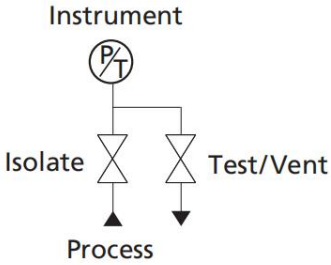

Basic Ordering NO.	Inlet/Process	Outlet/Instrument	Test/vent
2HSS-F	Flange	Flange	1/4 Female NPT

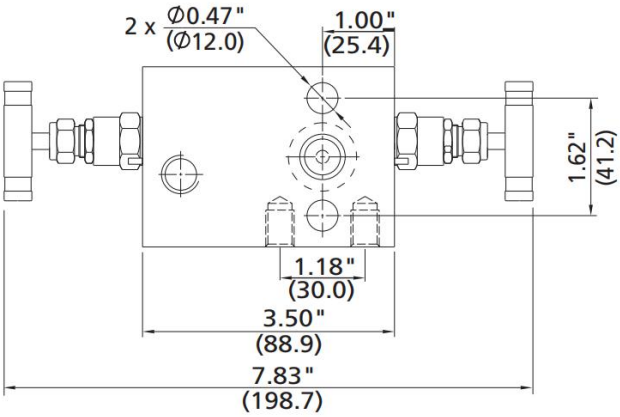

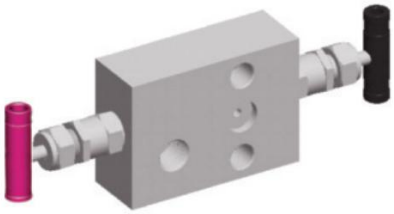

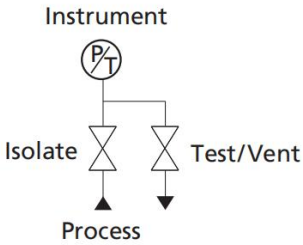

Basic Ordering NO.	Inlet/Process	Outlet/Instrument	Test/vent
2JSS-FN8-F	1/2 Female NPT	Flanged	1/4 Female NPT

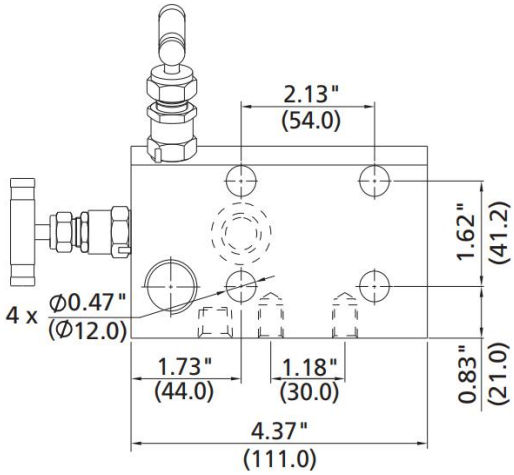

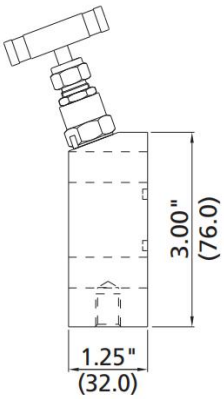

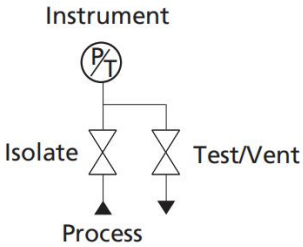

Basic Ordering NO.	Inlet/Process	Outlet/Instrument	Test/vent
2KSS-FN8-F	1/2 Female NPT	Flanged	1/4 Female NPT

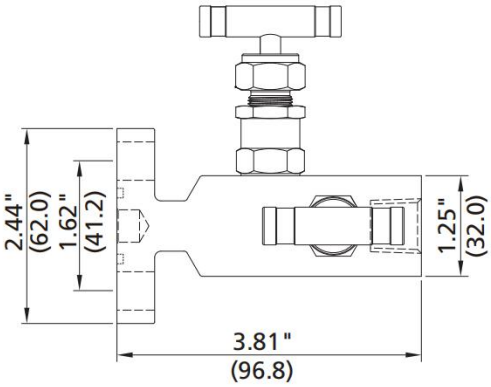

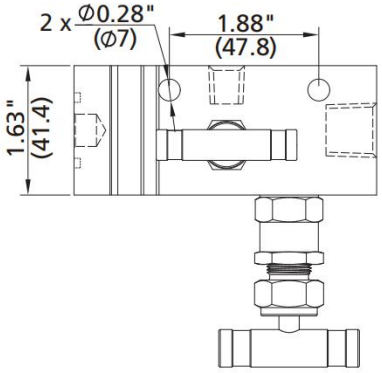

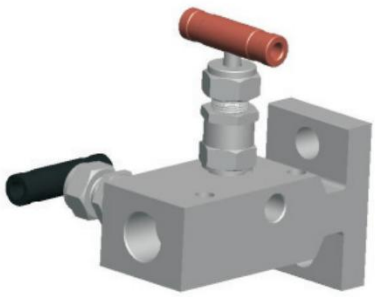

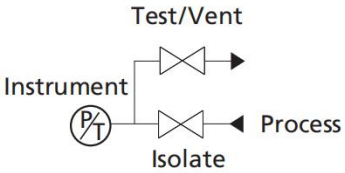

Basic Ordering NO.	Inlet/Process	Outlet/Instrument	Test/vent
2LSS-FN8-F	1/2 Female NPT	Flanged	1/4 Female NPT

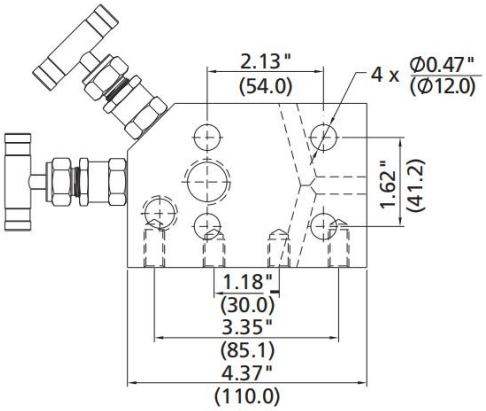

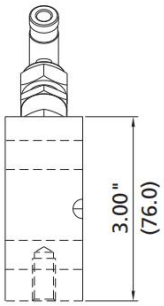

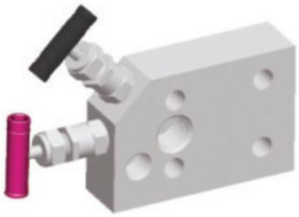

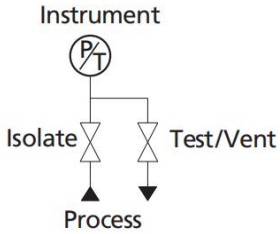

3-valve Manifolds

Consist of two block valves and one equalizer valve

Basic Ordering NO.	Inlet/Process	Outlet/Instrument
3ASS-FN8-F	1/2 Female NPT	Flange

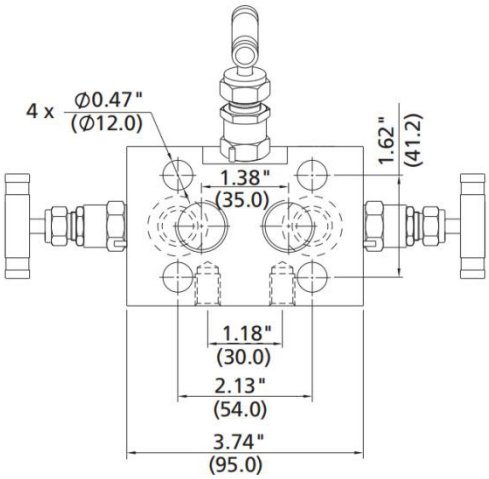

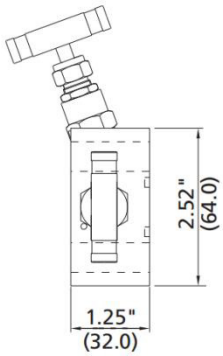

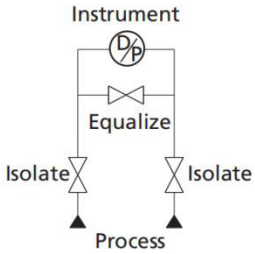

Basic Ordering NO.	Inlet/Process	Outlet/Instrument	Test/vent
3BSS-FN8-F	1/2 Female NPT	Flange	Optional

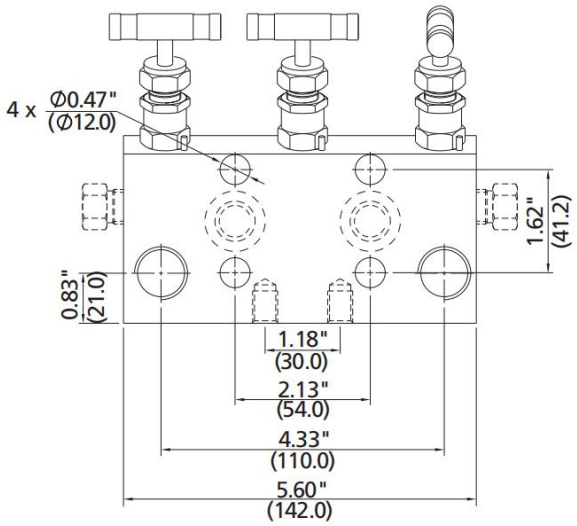

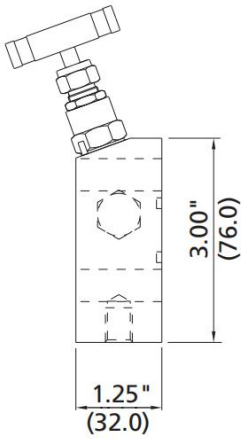

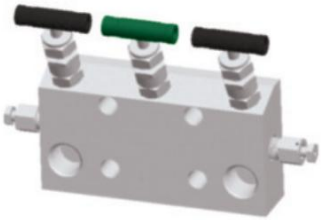

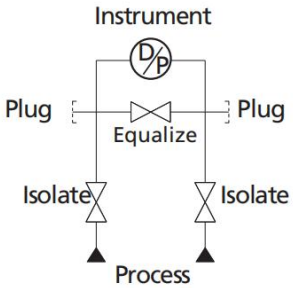

Basic Ordering NO.	Inlet/Process	Outlet/Instrument	Test/vent
3CSS-FN8-F	1/2 Female NPT	Flanged	Optional

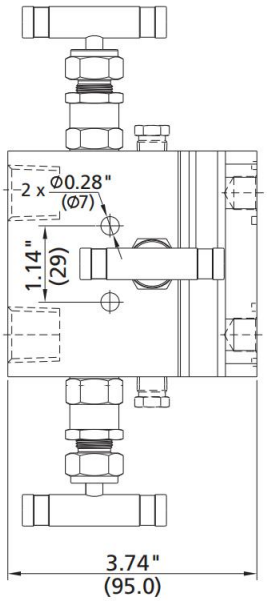

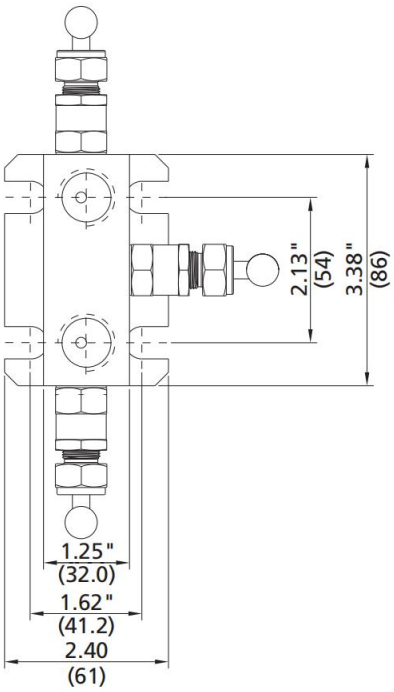

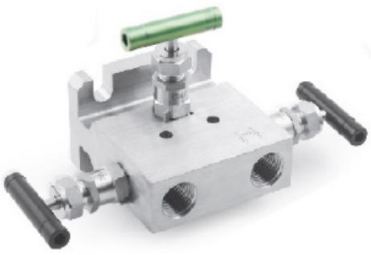

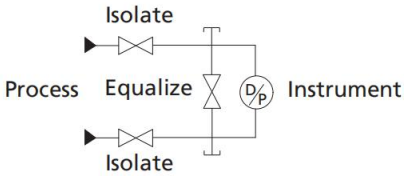

Basic Ordering NO.	Inlet/Process	Outlet/Instrument	Test/vent
3DSS-F	Flanged	Flanged	Optional

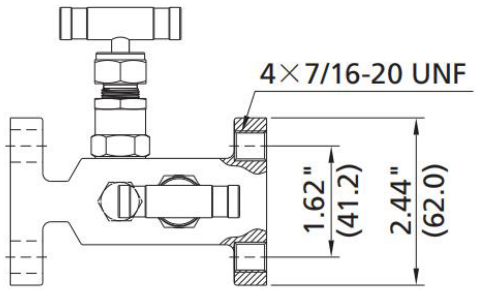

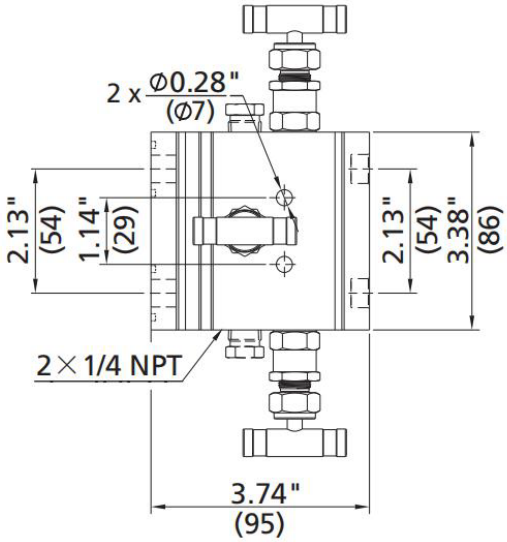

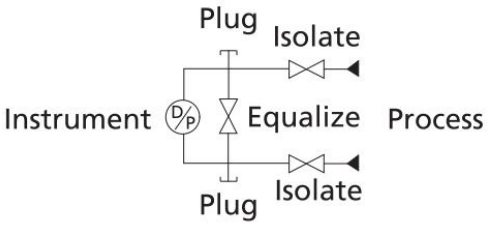

Basic Ordering NO.	Inlet/Process	Outlet/Instrument	Test/vent
3ESS-FN8	1/2 Female NPT	1/2 Female NPT	Optional

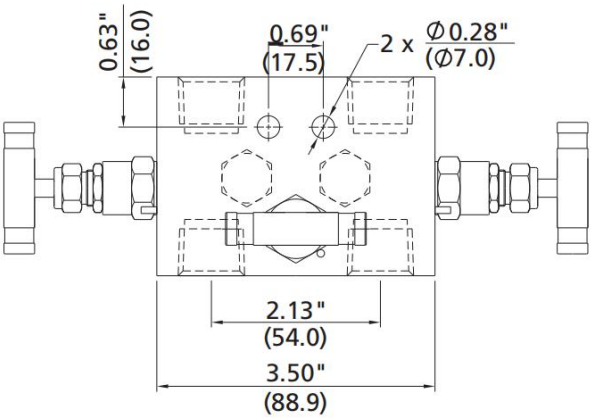

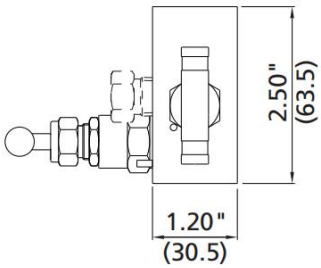

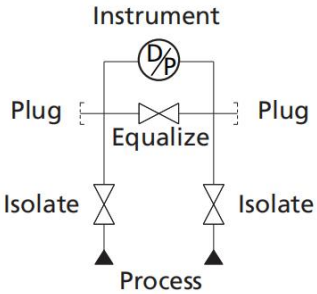

Basic Ordering NO.	Inlet/Process	Outlet/Instrument	Test/vent
3FSS-FN8-F	1/2 Female NPT	Flange	Optional

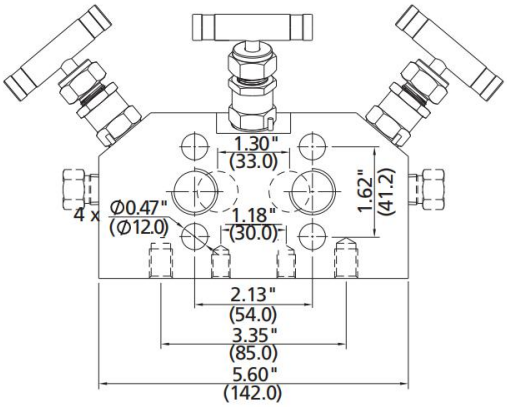

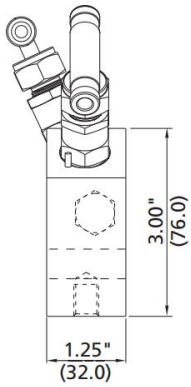

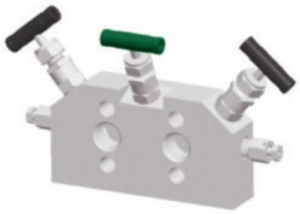

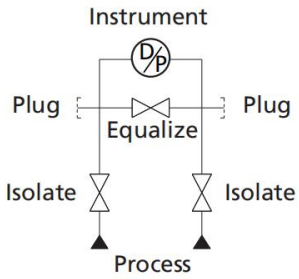

5-valve Manifolds

Double-bleed Function of 5-valve Manifold

Consist of two block valves, two bleed valves, and one equalizer valve

Basic Ordering NO.	Inlet/Process	Outlet/Instrument	Test/vent
5ASS-FN8-F	1/2 Female NPT	Flange	1/4 Female NPT

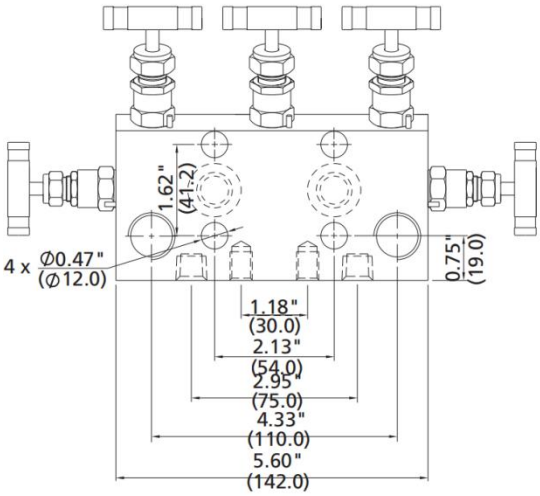

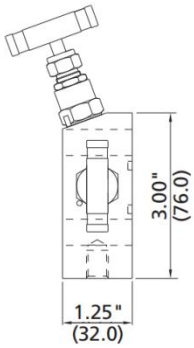

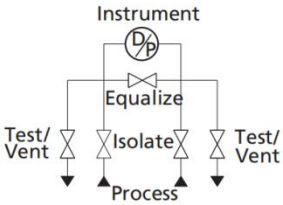

Basic Ordering NO.	Inlet/Process	Outlet/Instrument	Test/vent
5BSS-FN8	1/2 Female NPT	1/2 Female NPT	1/4 Female NPT

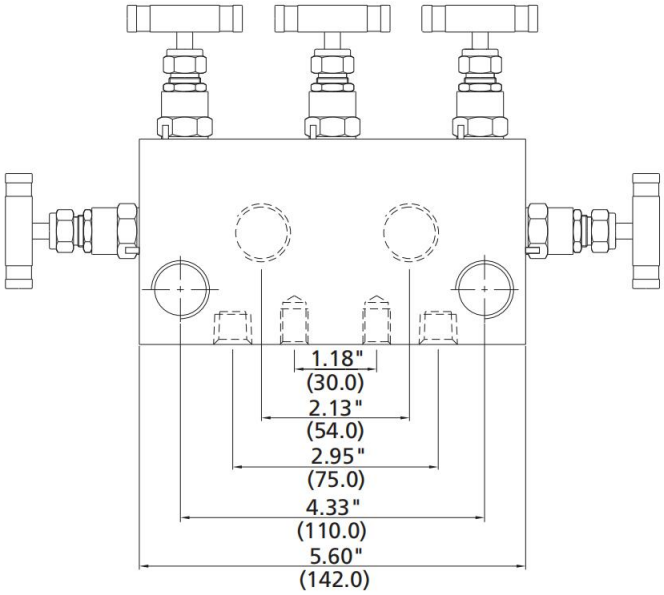

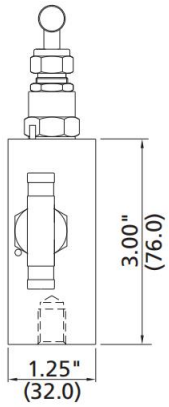

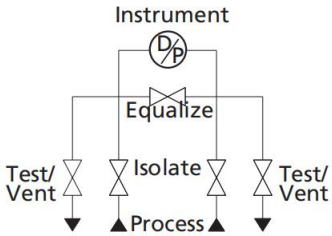

Basic Ordering NO.	Inlet/Process	Outlet/Instrument	Test/vent	Test
5CSS-FN8	1/2 Female NPT	1/2 Female NPT	1/4 Female NPT	Optional

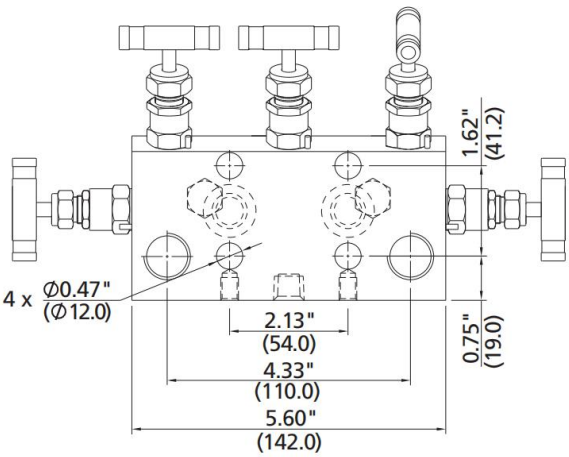

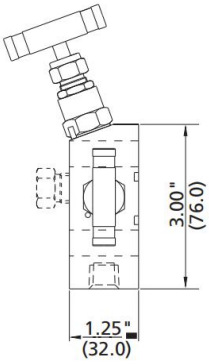

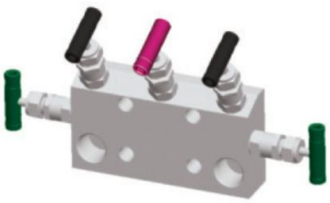

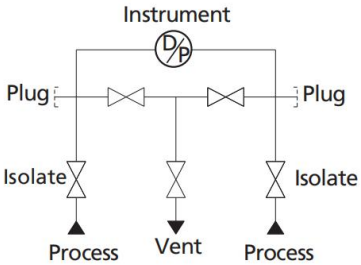

Basic Ordering NO.	Inlet/Process	Outlet/Instrument	Test/vent
5DSS-FN8-F	1/2 Female NPT	Flange	1/4 Female NPT

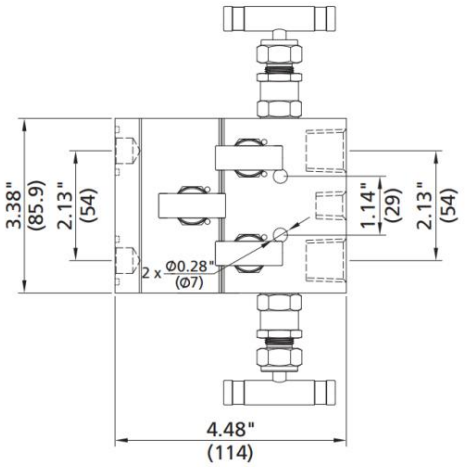

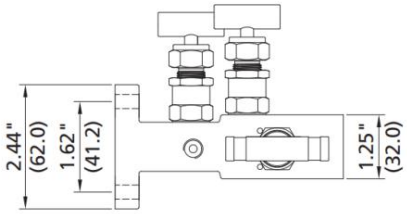

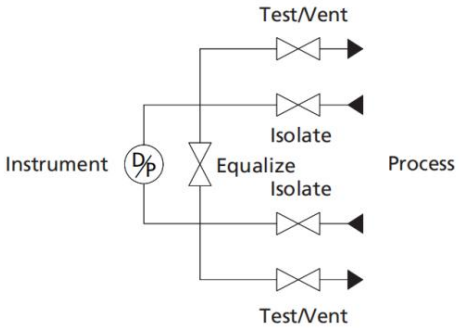

Basic Ordering NO.	Inlet/Process	Outlet/Instrument	Test/vent	Test
5ESS-FN8-F	1/2 Female NPT	Flange	1/4 Female NPT	Optional

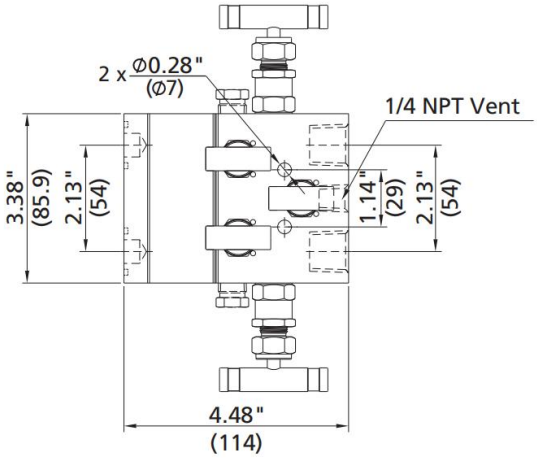

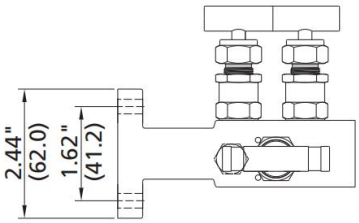

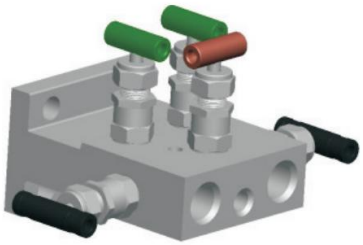

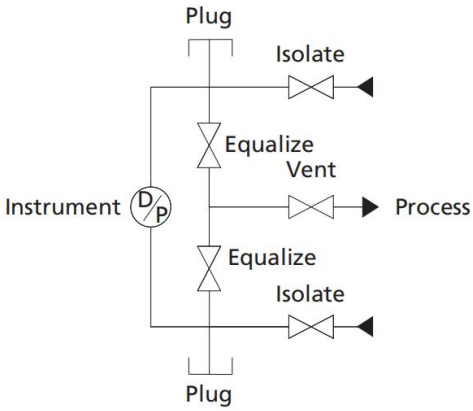

Basic Ordering NO.	Inlet/Process	Outlet/Instrument	Test/vent	Test
5FSS-F	Flange	Flange	1/4 Female NPT	Optional

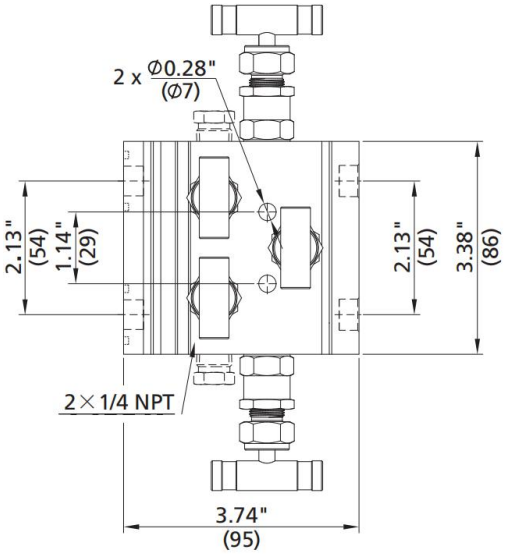

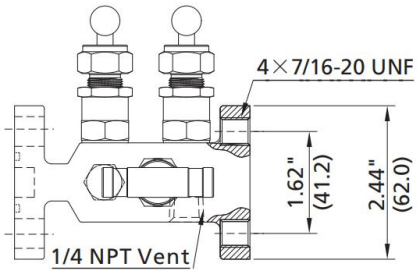

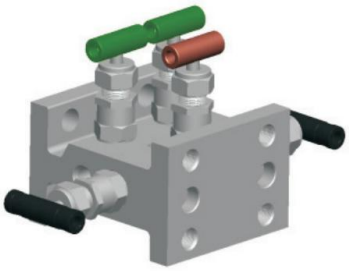

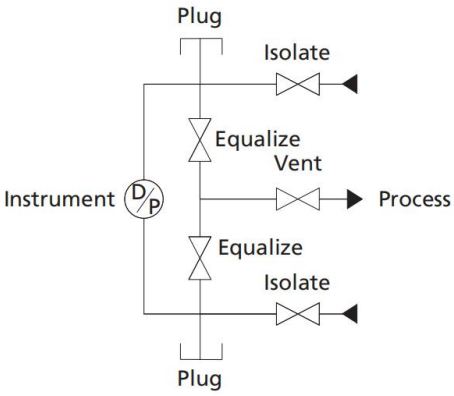

Basic Ordering NO.	Inlet/Process	Outlet/Instrument	Test/vent
5GSS-FN8-F	1/2 Female NPT	Flange	1/4 Female NPT

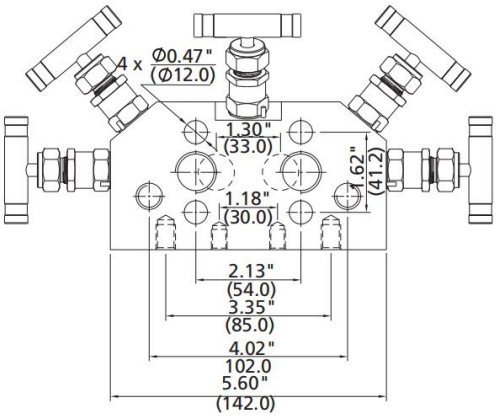

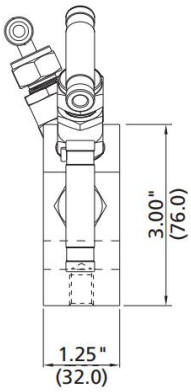

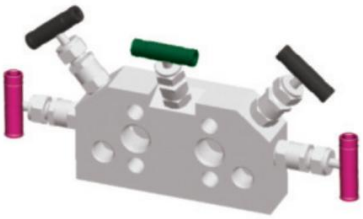

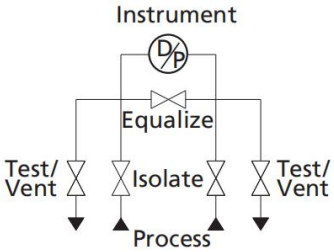

Relief Valve

◎ RB series RBSS-NS4 Bleed Valve is used as standard test/vent valve.

◎ For more information, refer to the Bleed Valve RB series.

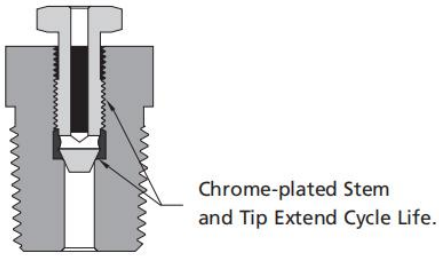

Calibration Fitting

◎ The calibration fittings can be connected directly with the bleed port of transmitter so that the calibration process can be simplified.

◎ For more information, refer to the Calibration Fitting.

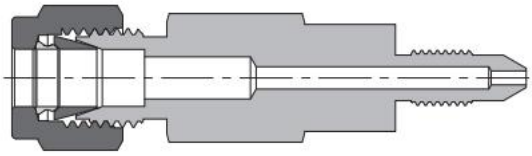

Part Number Description

2 A SS - FN 8 - LG - T Y

Manifold Series	
2	2-valve
3	3-valve
5	5-valve

Mount Type	
D	Direct Mount
R	Remote Mount

Body Material	
SS	316 SS
6L	316L SS
S4	304 SS
S1	321 SS
D5	Duple 2205
TI	Titanium Gr.4
A20	Alloy 20
M	Alloy 400
INC	Alloy 600
HC	C276
B	Brass
CS	Carbon Steel
9L	904L SS

Inlet Type	
FN	Female NPT
FR	Female BSPT
FM	Female Metric Thread (for RP)
F	Flanged

Inlet Size	
4	1/4"
8	1/2"
12	3/4"
20	M20 x 1.5

Outlet Type / Outlet Size	
D	type: Flanged
R	type: Same as Inlet
	Specified in the same way as the inlet type and size

Body Style	
A	Angle Pattern
B	Double equalize Function
C	Compact Pattern
L	Valves In-Line Mounted
H	Valves Horizontally Mounted
V	Valves Vertically Mounted

Packing Sealing Material	
	PTFE
G	Graphite

Test Ports & Plugs	
	No
T	1/4 Female NPT with Relief Valve
P	1/4 Female NPT with Plug

Mounting Bracket	
	No
Y	Yes

Check Valves







Contents

Part NO. Discription

SS - CPA - MN 2 - FN 2

Material	Series	Inlet	Inlet Size	Outlet Size	Outlet Size
SS: Stainles Steel 316	C: C Series	FN: Female Npt	2: 1/8″	FN: Female Npt	2: 1/8″
S9: Stainles Steel 904L	CH: CH Series	MN: Male Npt	3: 3/16″ or 3mm	MN: Male Npt	3: 3/16″ or 3mm
S4: Stainles Steel 304	CP: CP Series	FR: Female BSPT	4: 1/4″	FR: Female BSPT	4: 1/4″
S2: Stainles Steel 321	CPA: CPA Series	MR: Male BSPT	5: 5/16″	MR: Male BSPT	5: 5/16″
M4: Monle 400	CA: CA Series	FT: Franctional Tube	6: 3/8″ or 6mm	FT: Franctional Tube	6: 3/8″ or 6mm
I6: Inconle 625	CL: CL Series	MT: Metric Tube	8: 1/2″ 0r 8mm	MT: Metric Tube	8: 1/2″ 0r 8mm
HC: Hastelly C 276		BW: Butt Weld	10: 5/8″ or 10mm	BW: Butt Weld	10: 5/8″ or 10mm
B: Brass		SW: Socket Weld	12: 3/4″ or 12mm	SW: Socket Weld	12: 3/4″ or 12mm
CS: Cabon Steel			16: 1″ or 16mm		16: 1″ or 16mm

C Series Check Valves

C Series

- Resilient O-ring seat design for leak free sealing
- Variety of end connections and materials available
- Working pressure up to: 3000 psig (207 bar)
- Cracking pressure: 1/3 to 25 psig (0.02 to 1.7 bar)
- Working temperature: -10°F to 375°F (-23°C to 190°C)

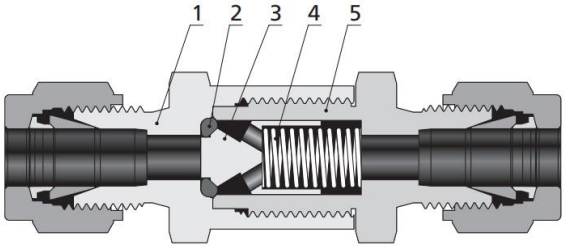

Component		Valve Material Grade/ASTM Specification	
		316 SS	Brass
1	Inlet Body	316 SS/A479	Brass C36000/B16
2	O-ring	Fluorocarbon FKM	Buna N
3	Poppet	316 SS/A479	Brass C36000/B16
4	Spring	302 SS/A313	302 SS/A313
5	Outlet Body	316 SS/A479	Brass C36000/B16

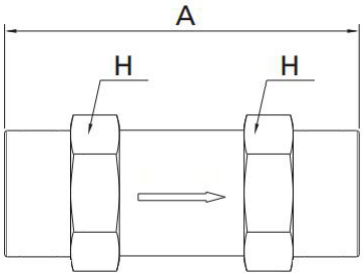

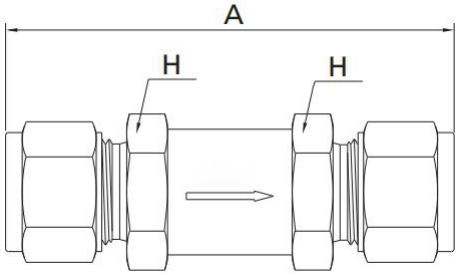

Basic Ordering Number	Connection Type and Size		CV	Dimension, in.(mm)	
	Inlet	Outlet		A	H
-C-FN2	1/8 Female NPT	1/8 Female NPT	0.1	1.89 (48.0)	5/8 (15.9)
-C-FN4	1/4 Female NPT	1/4 Female NPT	0.5	2.15 (54.6)	3/4 (19.1)
-C-FN6	3/8 Female NPT	3/8 Female NPT	1.5	2.98 (75.7)	7/8 (22.2)
-C-FN8	1/2 Female NPT	1/2 Female NPT	1.7	3.58 (91.0)	1 1/16 (27.0)
-C-FN12	3/4 Female NPT	3/4 Female NPT	4.5	4.08 (104)	1 1/4 (31.8)
-C-FN16	1 Female NPT	1 Female NPT	4.5	4.84 (123)	1 5/8 (41.3)
-C-MN2	1/8 Male NPT	1/8 Male NPT	0.1	1.71 (43.4)	5/8 (15.9)
-C-MN4	1/4 Male NPT	1/4 Male NPT	0.5	2.09 (53.1)	5/8 (15.9)
-C-MN6	3/8 Male NPT	3/8 Male NPT	1.5	2.78 (70.6)	7/8 (22.2)
-C-MN8	1/2 Male NPT	1/2 Male NPT	1.7	3.16 (80.3)	7/8 (22.2)
-C-MN12	3/4 Male NPT	3/4 Male NPT	4.5	4.08 (104)	1 1/4 (31.8)
-C-MN16	1 Male NPT	1 Male NPT	4.5	4.52 (115)	1 5/8 (41.3)
-C-FT2	1/8″ Tube	1/8″ Tube	0.1	2.14 (54.3)	5/8 (15.9)
-C-FT4	1/4″ Tube	1/4″ Tube	0.5	2.35 (59.8)	5/8 (15.9)
-C-FT6	3/8″ Tube	3/8″ Tube	1.5	3.17 (80.5)	7/8 (22.2)
-C-FT8	1/2″ Tube	1/2″ Tube	1.7	3.42 (87.0)	7/8 (22.2)
-C-FT12	3/4″ Tube	3/4″ Tube	4.5	4.32 (110)	1 1/4 (31.8)
-C-FT16	1″ Tube	1″ Tube	4.5	4.74 (120)	1 5/8 (41.3)
-C-MT6	6mm Tube	6mm Tube	0.5	2.36 (60.0)	5/8 (15.9)
-C-MT10	10mm Tube	10mm Tube	1.5	3.32 (84.3)	7/8 (22.2)
-C-MT12	12mm Tube	12mm Tube	1.7	3.42 (87.0)	7/8 (22.2)

CH Series Check Valves

CH Series

- Seat ring continuously cleaned by media, avoiding secondary pollution
- Variety of end connections and materials available
- Working pressure up to: 6000 psig (414 bar)
- Cracking pressure: 1/3 to 25 psig (0.02 to 1.7 bar)
- Working temperature: -10 F to 400 F (-23 C to 204 C)

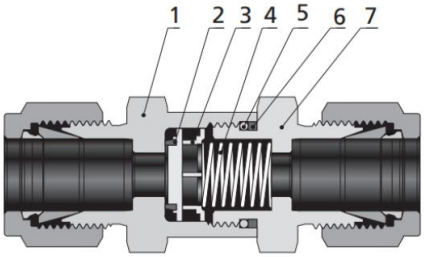

Component		Valve Material Grade/ASTM Specification	
		316 SS	Brass
1	Inlet Body	316 SS/A479	
2	Poppet	Fluorocarbon FKM - bonded 316 SS/A479	
3	Poppet Stop	316 SS/A240	
4	Spring	302 SS/A313	
5	O-ring	Fluorocarbon FKM	
6	Backup Ring	PTFE/D1710	
7	Outlet Body	316 SS/A479	

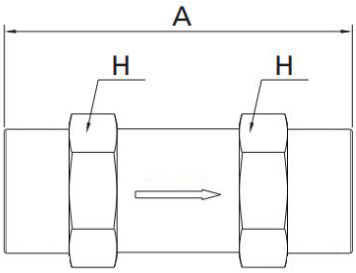

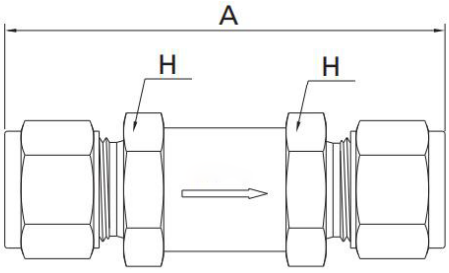

Basic Ordering Number	Connection Type and Size		CV	Dimension, in.(mm)	
	Inlet	Outlet		A	H
-CH-FN4	1/4 Female NPT	1/4 Female NPT	0.7	2.13 (54.1)	1 1/16 (27.0)
-CH-FN6	3/8 Female NPT	3/8 Female NPT	1.8	2.55 (64.8)	1 (25.4)
-CH-FN8	1/2 Female NPT	1/2 Female NPT	1.8	3.03 (77.0)	1 1/16 (27.0)
-CH-FN12	3/4 Female NPT	3/4 Female NPT	4.7	3.23 (82.0)	1 5/8 (41.3)
-CH-FN16	1 Female NPT	1 Female NPT	4.7	3.83 (97.3)	1 5/8 (41.3)
-CH-MN4	1/4 Male NPT	1/4 Male NPT	0.7	2.17 (55.1)	1 1/16 (27.0)
-CH-MN6	3/8 Male NPT	3/8 Male NPT	1.8	2.36 (60.0)	1 (25.4)
-CH-MN8	1/2 Male NPT	1/2 Male NPT	1.8	2.73 (69.3)	1 (25.4)
-CH-MN12	3/4 Male NPT	3/4 Male NPT	4.7	3.29 (83.6)	1 5/8 (41.3)
-CH-MN16	1 Male NPT	1 Male NPT	4.7	3.67 (93.2)	1 5/8 (41.3)
-CH-FT2	1/8″ Tube	1/8″ Tube	0.7	2.27 (57.7)	1 1/16 (27.0)
-CH-FT4	1/4″ Tube	1/4″ Tube	0.7	2.43 (61.7)	1 1/16 (27.0)
-CH-FT6	3/8″ Tube	3/8″ Tube	1.8	2.75 (70.0)	1 (25.4)
-CH-FT8	1/2″ Tube	1/2″ Tube	1.8	2.96 (75.2)	1 (25.4)
-CH-FT12	3/4″ Tube	3/4″ Tube	4.7	3.53 (89.4)	1 5/8 (41.3)
-CH-FT16	1″ Tube	1″ Tube	4.7	3.88 (98.6)	1 5/8 (41.3)
-CH-MT6	6mm Tube	6mm Tube	0.7	2.43 (61.7)	1 1/16 (27.0)
-CH-MT10	10mm Tube	10mm Tube	1.8	2.80 (71.0)	1 (25.4)
-CH-MT12	12mm Tube	12mm Tube	1.8	2.96 (75.2)	1 (25.4)
-CH-MT22	22mm Tube	22mm Tube	4.7	3.53 (89.4)	1 5/8 (41.3)
-CH-MT25	25mm Tube	25mm Tube	4.7	3.88 (98.6)	1 5/8 (41.3)

CP & CPA Series Check Valves

CP Series

- Compact, one piece body
- Variety of end connections and materials available
- Working pressure up to: 3000 psig (207 bar)
- Cracking pressure: 1/3 to 25 psig (0.02 to 1.7 bar)
- Working temperature: -10 F to 375 F (-23 C to 190 C)

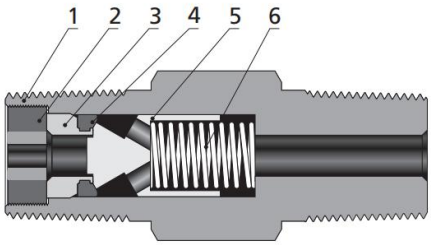

Component		Valve Material Grade/ASTM Specification	
		316 SS	Brass
1	Body	316 SS/A479	Brass C36000/B16
2	Insert Locking Screw	316 SS/A276 or A479	Brass C36000/B16
3	Insert	316 SS/A479	Brass C36000/B16
4	O-ring	Fluorocarbon FKM	Buna N
5	Poppet	316 SS/A479	Brass C36000/B16
6	Spring	302 SS/A313	302 SS/A313

CPA Series

- Compact, one piece body
- Variety of end connections and materials available
- Working pressure up to: 3000 psig (207 bar)
- Cracking pressure: 1/3 to 25 psig (0.02 to 1.7 bar)
- Working temperature: -10 F to 375 F (-23 C to 190 C)

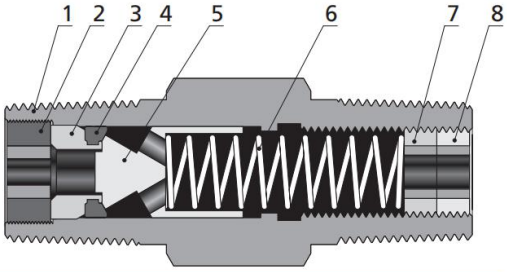

Component		Valve Material Grade/ASTM Specification	
		316 SS	Brass
1	Body	316 SS/A479	Brass C36000/B16
2	Insert Locking Screw	316 SS/A276 or A479	Brass C36000/B16
3	Insert	316 SS/A479	Brass C36000/B16
4	O-ring	Fluorocarbon FKM	Buna N
5	Poppet	316 SS/A479	Brass C36000/B16
6	Spring	302 SS/A313	302 SS/A313
7	Adjusting Screw	316 SS/A479	316 SS/A276
8	Locking Screw	302 SS/A313	316 SS/A276

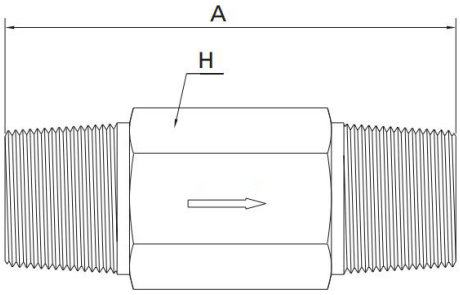

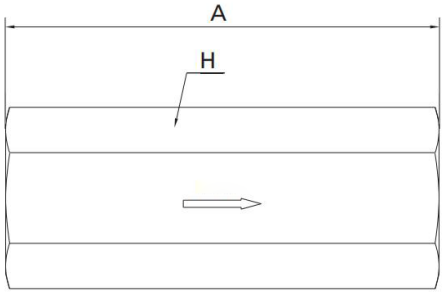

Basic Ordering Number	Connection Type and Size		CV	Dimension, in.(mm)	
	Inlet	Outlet		A	H
-CP-FN4	1/4 Female NPT	1/4 Female NPT	0.35	2.41 (61.2)	3/4 (19.1)
-CP-FN8	1/2 Female NPT	1/2 Female NPT	1.2	3.71 (94.2)	11/16 (27.0)
-CP-MN4	1/4 Male NPT	1/4 Male NPT	0.35	1.62 (41.1)	9/16 (14.3)
-CP-MN8	1/2 Male NPT	1/2 Male NPT	1.2	2.28 (58.0)	7/8 (22.2)
-CPA-FN4	1/4 Female NPT	1/4 Female NPT	0.35	2.98 (75.7)	3/4 (19.1)
-CPA-MN4	1/4 Male NPT	1/4 Male NPT	0.35	1.62 (41.1)	9/16 (14.3)
-CPA-MN8	1/2 Male NPT	1/2 Male NPT	1.2	2.56 (65.0)	7/8 (22.2)

CA Series Check Valves

CA Series

- Adjustable Cracking Pressures
- Variety of end connections and materials available
- Working pressure up to: 3000 psig (207 bar)
- Cracking pressure: 3 to 600 psig (0.2 to 41.4 bar)
- Working temperature: -10 F to 375 F (-23 C to 190 C)

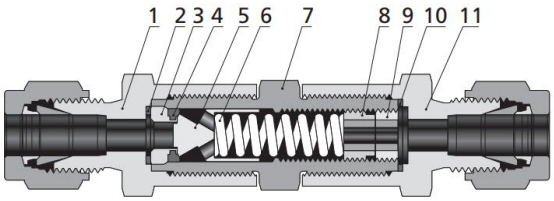

Component		Valve Material Grade/ASTM Specification	
		316 SS	Brass
1	Inlet Body	316 SS/A479	Brass C36000/B16
2	Inlet Gasket	PTFE-coated 316 SS/A240	PTFE-coated 316 SS/A240
3	Insert	316 SS/A479	Brass C36000/B16
4	O-ring	Fluorocarbon FKM	Buna N
5	Poppet	316 SS/A479	Brass C36000/B16
6	Spring	302 SS/A313	302 SS/A313
7	Center Body	316 SS/A479	Brass C36000/B16
8	Adjusting Screw	316 SS/A276	316 SS/A276
9	Locking Screw	316 SS/A276	316 SS/A276
10	Outlet Gasket	PTFE-coated 316 SS/A240	PTFE-coated 316 SS/A240
11	Outlet Body	316 SS/A479	Brass C36000/B16

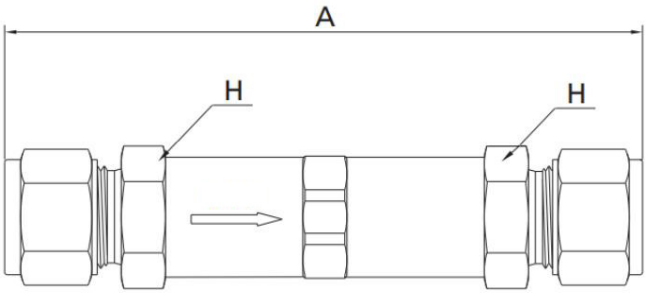

Basic Ordering Number	Connection Type and Size		CV	Dimension, in.(mm)	
	Inlet	Outlet		A	H
-CA-FT4	1/4" Tube	1/4" Tube	0.4	3.23 (82.0)	5/8 (15.9)
-CA-MT6	6mm Tube	6mm Tube	0.4	3.23 (82.0)	5/8 (15.9)
-CA-MT8	8mm Tube	8mm Tube	0.4	3.32 (84.3)	5/8 (15.9)

CL Series Check Valves

CL Series

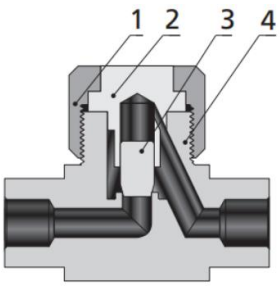

- Rugged, all-stainless steel construction
- Union bonnet design, all-stainless steel structure, horizontal installation with bonnet nut on top
- Reverse flow coefficient less than 0.1% of forward flow coefficient
- Working pressure up to: 6000 psig (414 bar)
- Working temperature: -65 F to 900 F (-53 C to 482 C)

Component		Valve Material Grade/ASTM Specification
1	Bonnet Nut	316 SS/A479
2	Bonnet	316 SS/A479
3	Poppet	S17400/A564
4	Body	316 SS/A479

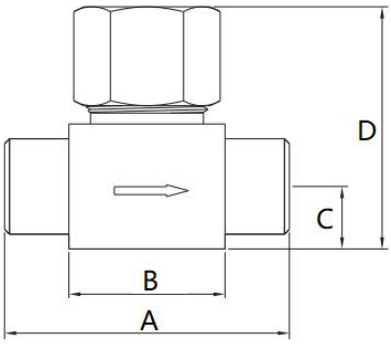

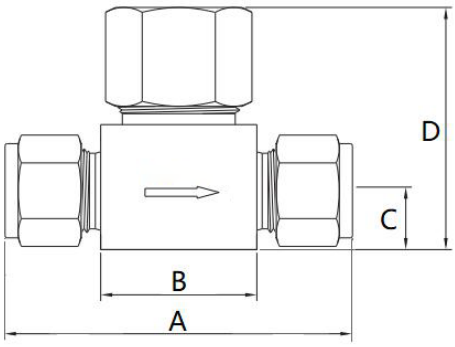

Basic Ordering Number	Connection Type and Size		CV	Dimension, in.(mm)			
	Inlet	Outlet		A	B	C	D
-CL-FN2	1/8 Female NPT	1/8 Female NPT	0.30	2.00 (50.8)	1.00 (25.4)	1.47 (37.3)	0.39 (10.0)
-CL-FN4	1/4 Female NPT	1/4 Female NPT	0.64	2.25 (57.2)	1.25 (31.8)	1.85 (47.0)	0.50 (12.7)
-CL-FN6	3/8 Female NPT	1/8 Female NPT	2.20	3.12 (79.2)	1.86 (47.2)	2.44 (62.0)	0.62 (15.7)
-CL-FN8	1/2 Female NPT	1/4 Female NPT	2.20	3.12 (79.2)	1.86 (47.2)	2.44 (62.0)	0.62 (15.7)
-CL-FT4	1/4 Tube	1/4 Tube	0.30	2.40 (61.0)	1.01 (25.7)	1.47 (37.3)	0.39 (10.0)
-CL-FT6	3/8 Tube	3/8 Tube	0.64	2.83 (71.9)	1.31 (33.3)	1.85 (47.0)	0.50 (12.7)
-CL-FT8	1/2 Tube	1/2 Tube	2.20	3.92 (99.6)	2.19 (55.6)	2.44 (62.0)	0.62 (15.7)
-CL-FT12	3/4 Tbue	3/4 Tbue	2.20	3.92 (99.6)	2.19 (55.6)	2.44 (62.0)	0.62 (15.7)
-CL-MT7	6mm Tube	6mm Tube	0.30	2.40 (61.0)	1.01 (25.7)	1.47 (37.3)	0.39 (10.0)
-CL-MT10	10mm Tube	10mm Tube	0.64	2.83 (71.9)	1.31 (33.3)	1.85 (47.0)	0.50 (12.7)
-CL-MT12	12mm Tube	12mm Tube	2.20	3.92 (99.6)	2.19 (55.6)	2.44 (62.0)	0.62 (15.7)
-CL-SW4	1/4 Socket Weld	1/4 Socket Weld	0.30	1.81 (46.0)	0.90 (22.9)	1.47 (37.3)	0.39 (10.0)
-CL-SW6	3/8 Socket Weld	3/8 Socket Weld	0.64	2.25 (57.2)	1.25 (31.8)	1.85 (47.0)	0.50 (12.7)
-CL-SW8	1/2 Socket Weld	1/2 Socket Weld	2.20	3.13 (79.5)	2.19 (55.6)	2.44 (62.0)	0.62 (15.7)
-CL-BW4	1/4 Butt Weld	1/4 Butt Weld	0.30	1.81 (46.0)	0.90 (22.9)	1.47 (37.3)	0.39 (10.0)
-CL-BW6	3/8 Butt Weld	3/8 Butt Weld	0.64	2.25 (57.2)	1.25 (31.8)	1.85 (47.0)	0.50 (12.7)
-CL-BW8	1/2 Butt Weld	1/2 Butt Weld	2.20	3.13 (79.5)	2.19 (55.6)	2.44 (62.0)	0.62 (15.7)

37° Flared Tube Fittings

Contents

How the Flared Fittings Work

◎Tightening of the nut clamps the tube flare between the body nose (seat) producing a leak tight connection. This clamping on the 37° taper provides a measure of elasticity to the joint helping it to resist loosening under vibration. The clamping force results in a small radial load that tends to deform the fitting nose radially. The resistance of the nose to elastic deformation provides a constant preload (similar to a lockwasher) keeping it tight.

◎The clamping force provided by the nut resists the opposing force of the fluid under pressure. The joint remains leak tight as long as the clamping force is higher than the opposing pressure load.

◎Properly assembled the flared fittings with appropriate tube will seal consistently under pressure until tube bursts.

◎Sealing in falred fittings takes place between two smooth metal surfaces, the fitting nose and inside of the tube flare.

◎Therefore, the sealing surfaces have to be smooth, free of any nicks, scratches, spiral tool marks, splits or weld beads.

◎Certain types of harder tubes that are not fully annealed may not be suitable for flaring due to the potential for immediate or long-term cracking of the tube flare. For specific tube type and wall thickness recommendations.

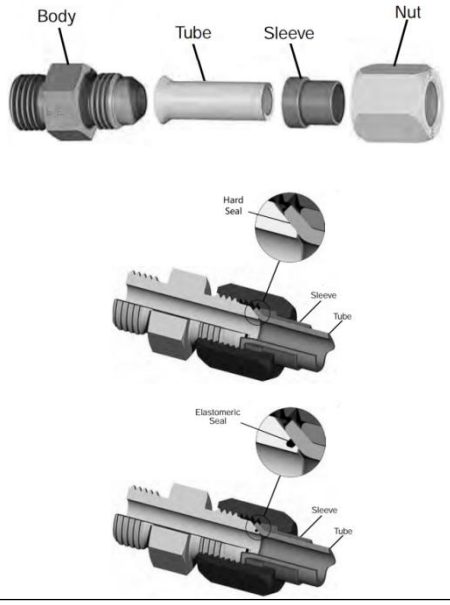

Materials

Designator	Material	Bar Stock	Forged
SS	Stainless Steel 316	ASTM A276	ASTM A182
S4	Stainless Steel 304	ASTM A276	ASTM A182
CS	Cabon Steel	ASTM A108	ASTM A105
B	Brass	ASTM B16/B453	ASTM B283
AL	Aluminum	ASTM B211	ASTM B247

Working Pressure

SAE Dash Size	Tube O.D.		Flare Fittings Thread	Working Pressure (PSIG/bar)
	Inch.	mm		
2	1/8	-	5/16-24	5000 / 345
3	3/16	-	3/8-24	5000 / 345
4	1/4	6	7/16-20	5000 / 345
5	5/16	8	1/2-20	5000 / 345
6	3/8	10	9/16-18	5000 / 345
8	1/2	12	3/4-16	4500 / 310
10	5/18	14/15/16	7/8-14	3500 / 241
12	3/4	18/20	1 1/6-12	3500 / 241
14	7/8	22	1 3/16-12	3000 / 207
16	1	25	1 5/16-12	3000 / 207
20	1 1/4	20/30/32	1 5/8-12	2500 / 172
24	1 1/2	35/38	1 7/8-12	2000 / 138
32	2	-	2 1/2-12	1500 / 103

Part NO. Discription

For Example: SS-JMC-AN 8-MN 8

Material	Series	AN: Male Flared	Flared Size	Thread Type :	Thread Size
SS: SS 316		AS: Female Flared	2: 1/8″	FN: Female Npt	2: 1/8″
S9: SS 904L			4: 1/4″	MN: Male Npt	4: 1/4″
S4: SS 304			6: 3/8″	FR: Female BSPT	6: 3/8″
M4: Monle 400			8: 1/2″	MR: Male BSPT	8: 1/2″
B: Brass			12: 3/4″	SAE: UNF	12: 3/4″
CS: Cabon Steel			16: 1″		16: 1″

Nuts

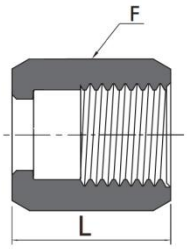

T-Tube O.D		Basic Ordering Number	Dimension, in. (mm)	
In.	mm		L	F (Hex)
1/8	3	-JN-AN2	0.55(14.0)	0.37(9.5)
3/16	4	-JN-AN3	0.61(15.5)	0.44(11.1)
1/4	6	-JN-AN4	0.62(15.8)	0.56(14.3)
5/16	8	-JN-AN5	0.68(17.3)	0.63(15.9)
3/8	10	-JN-AN6	0.73(18.5)	0.69(17.5)
1/2	12	--JN-AN8	0.85(21.6)	0.87(22.2)
5/8	16	-JN-AN10	0.98(24.9)	1.00(25.4)
3/4	18	-JN-AN12	1.03(26.2)	1.25(31.8)
7/8	22	-JN-AN14	1.09(27.7)	1.37(34.9)
1	25	-JN-AN16	1.13(28.7)	1.50(38.1)
1 1/4	32	-JN-AN20	1.23(31.2)	2.00(50.8)
1 1/2	38	-JN-AN24	1.42(36.1)	2.00(57.2)
2	50	-JN-AN32	1.75(44.5)	2.87(73.0)

Sleeves

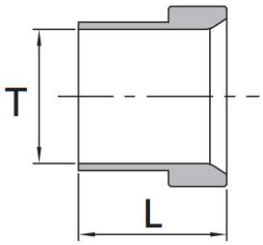

T-Tube O.D.		Basic Ordering Number		L
in.	mm	in.	mm	in .(mm)
1/8	3	-JS-AN2	-SL-AN3M	0.34 (8.6)
3/16	4	-JS-AN3	-SL-AN4M	0.34 (8.6)
1/4	6	-JS-AN4	-SL-AN6M	0.41 (10.4)
5/16	8	-JS-AN5	-SL-AN8M	0.44 (11.2)
3/8	10	-JS-AN6	-SL-AN10M	0.50 (12.7)
1/2	12	-JS-AN8	-SL-AN12M	0.56 (14.2)
5/8	16	-JS-AN10	-SL-AN16M	0.66 (16.8)
3/4	18	-JS-AN12	-SL-AN18M	0.68 (17.3)
7/8	22	-JS-AN14	-SL-AN22M	0.76 (19.3)
1	25	-JS-AN16	-SL-AN25M	0.78 (19.8)
1 1/4	32	-JS-AN20	-SL-AN32M	0.91 (23.1)
1 1/2	38	-JS-AN24	-SL-AN38M	1.12 (28.4)
2	50	-JS-AN32	-SL-AN50M	1.19 (30.2)

Unions

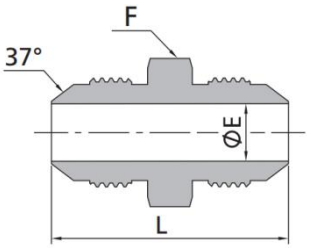

T-Tube O.D		Basic Ordering Number	Dimension，in .(mm)		
In	mm		L	E	F (Hex)
1/8	3	-JU-AN2	1.17 (29.7)	0.06(1.6)	0.44 (11.1)
3/16	4	-JU-AN3	1.23 (31.2)	0.13(3.2)	0.44 (11.1)
1/4	6	-JU-AN4	1.37 (34.8)	0.17 (4.4)	0.50 (12.7)
5/16	8	-JU-AN5	1.37 (34.8)	0.24 (6.0)	0.56 (14.3)
3/8	10	-JU-AN6	1.41 (35.8)	0.30 (7.5)	0.63 (15.9)
1/2	12	-JU-AN8	1.62 (41.1)	0.39 (9.9)	0.81 (20.6)
5/8	16	-JU-AN10	1.88 (47.8)	0.48 (12.3)	0.94 (23.8)
3/4	18	-JU-AN12	2.16 (54.9)	0.61 (15.5)	1.13 (28.6)
7/8	22	-JU-AN14	2.21 (56.1)	0.72(18.0)	1.25 (31.8)
1	25	-JU-AN16	2.25 (57.2)	0.85 (21.5)	1.37 (34.9)
1 1/4	32	-JU-AN20	2.43 (61.7)	1.08 (27.5)	1.69 (42.9)
1 1/2	38	-JU-AN24	2.75 (69.8)	1.30 (33.0)	2.00 (50.8)
2	50	-JU-AN32	3.40 (86.4)	1.77 (45.0)	2.63 (66.7)

Large Hex Unions

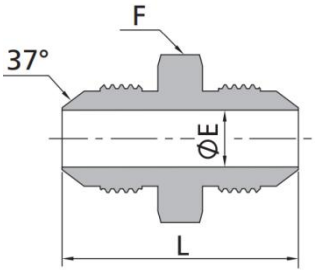

Tube O.D.		Basic Ordering Number	Dimensions, in. (mm)		
in.	mm		L	E	F (Hex)
1/8	3	-LHU-AN2	1.17 (29.7)	0.06 (1.6)	0.56(14.3)
3/16	4	-LHU-AN3	1.23 (31.2)	0.13 (3.2)	0.63 (15.9)
1/4	6	-LHU-AN4	1.37 (34.8)	0.17 (4.4)	0.69 (17.5)
5/16	8	-LHU-AN5	1.37 (34.8)	0.24 (6.0)	0.75 (19.1)
3/8	10	-LHU-AN6	1.41 (35.8)	0.30 (7.5)	0.81 (20.6)
1/2	12	-LHU-AN8	1.62 (41.1)	0.39 (9.9)	1.00 (25.4)
5/8	16	-LHU-AN10	1.88 (47.8)	0.48 (12.3)	1.13 (28.6)
3/4	18	-LHU-AN12	2.16 (54.9)	0.61 (15.5)	1.37 (34.9)
7/8	22	-LHU-AN14	2.21 (56.1)	0.72 (18.3)	1.50 (38.1)
1	25	-LHU-AN16	2.25 (57.2)	0.85 (21.5)	1.63 (41.3)
1 1/4	32	-LHU-AN20	2.43 (61.7)	1.08 (27.5)	1.87 (47.6)
1 1/2	38	-LHU-AN24	2.75 (69.8)	1.30 (33.0)	2.13 (54.0)
2	50	-LHU-AN32	3.40 (86.4)	1.77 (45.0)	2.75 (69.9)

Male Connectors-NPT

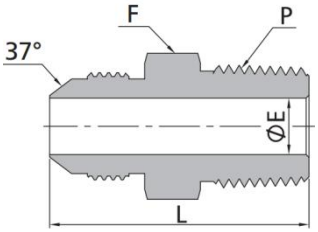

T-Tube O.D		P-NPT	Basic Ordering	Dimension, in. (mm)		
In.	mm	Size	Number	L	E	F (Hex)
1/8	3	1/8	-JMC-AN2-MN2	1.11(28.2)	0.06(1.6)	0.44(11.1)
3/16	4	1/8	-JMC-AN3-MN2	1.14(29.0)	0.13(3.2)	0.44(11.1)
1/4	6	1/8	-JMC-AN4-MN2	1.22(31.0)	0.17 (4.4)	0.50(12.7)
1/4	6	1/4	-JMC-AN4-MN4	1.42(36.0)	0.17 (4.4)	0.56(14.3)
1/4	6	1/2	-JMC-AN4-MN8	1.68(42.7)	0.17 (4.4)	0.87(22.2)
5/16	8	1/8	-JMC-AN5-MN2	1.22(31.0)	0.19 (4.8)	0.56(14.3)
5/16	8	1/4	-JMC-AN5-MN4	1.42(36.1)	0.24(6.0)	0.56(14.3)
3/8	10	1/8	-JMC-AN6-MN2	1.25(31.8)	0.19 (4.8)	0.63 (15.9)
3/8	10	1/4	-JMC-AN6-MN4	1.43(36.3)	0.28(7.1)	0.63 (15.9)
3/8	10	3/8	-JMC-AN6-MN6	1.42(36.1)	0.3(7.5)	0.75(19.1)
3/8	10	1/2	JMC-AN6-MN8	1.67(42.5)	0.3(7.5)	0.87(22.2)
1/2	12	1/4	-JMC-AN8-MN4	1.53(38.9)	0.28(7.1)	0.81(20.6)
1/2	12	3/8	-JMC-AN8-MN6	1.53(38.9)	0.39(9.9)	0.81(20.6)
1/2	12	1/2	-JMC-AN8-MN8	1.79 (45.5	0.39(9.9)	0.87 (22.2)
1/2	12	3/4	-JMC-AN8-MN2	1.85 (47.0)	0.39(9.9)	1.13 (28.6)
5/8	16	3/8	-JMC-AN10-MN6	1.70 (43.1)	0.38 (9.6)	0.94 (23.8)
5/8	16	1/2	-JMC-AN10-MN8	1.89 (48.0)	0.48 (12.3)	0.94 (23.8)
5/8	16	3/4	-JMC-AN10-MN12	1.95 (49.5)	0.48 (12.3)	1.13 (28.6)
3/4	18	3/4	-JMC-AN12-MN12	2.06 (52.3)	0.61 (15.5)	1.13 (28.6)
3/4	18	1	-JMC-AN12-MN16	2.25 (57.1)	0.61 (15.5)	1.37 (34.9)
7/8	22	3/4	-JMC-AN14-MN12	2.09 (53.1)	0.62 (15.7)	1.25 (31.8)
1	25	3/4	-JMC-AN16-MN12	2.11 (53.5)	0.62 (15.7)	1.37 (34.9)
1	25	1	-JMC-AN16-MN16	2.30 (58.4)	0.85 (21.5)	1.37 (34.9)
1 1/4	32	1	-JMC-AN20-MN16	2.42 (61.5)	0.88 (22.4)	1.69 (42.9)
1 1/4	32	1 1/4	-JMC-AN20-MN20	2.45 (62.2)	1.08 (27.5)	1.69 (42.9)
1 1/2	38	1 1/4	-JMC-AN24-MN20	2.68 (68.1)	1.13 (28.6)	2.00 (50.8)
1 1/2	38	1 1/2	-JMC-AN24-MN24	2.68 (68.1)	1.30 (33.0)	2.00 (50.8)
2	50	2	-JMC-AN32-MN32	3.11 (79.0)	1.77 (45.0)	2.63 (66.7)

Male Connectors-SAE

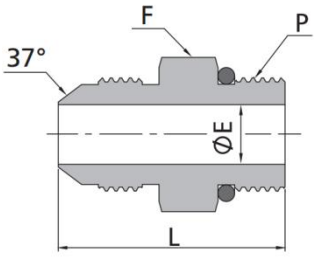

T-Tube O.D		P-SAE Thread Size	Basic Ordering Number	Dimension, in. (mm)		
In.	mm			L	E	F (Hex)
1/8	3	5/16-24	-JMC-AN2-ST5	1.06(26.9)	0.06(1.6)	0.44(11.1)
3/16	4	3/8-24	-JMC-AN3-ST6	1.10(27.9)	0.13(3.2)	0.50(12.7)
1/4	6	7/16-20	-JMC-AN4-ST7	1.23(31.2)	0.17 (4.4)	0.56(14.3)
1/4	6	1/2-20	-JMC-AN4-ST8	1.23(31.2)	0.17 (4.4)	0.63 (15.9)
1/4	6	9/16-18	-IMC-AN4-ST9	1.30(33.0)	0.17 (4.4)	0.69 (17.5)
1/4	6	3/4-16	-JMC-AN4-ST12	1.37(34.8)	0.17 (4.4)	0.87 (22.2)
5/16	8	1/2-20	-JMC-AN5-ST8	1.23(31.2)	0.24(6.0)	0.63 (15.9)
3/8	10	9/16-18	-JMC-AN6-ST9	1.30(33.0)	0.30 (7.5)	0.69 (17.5)
3/8	10	3/4-16	-JMC-AN6-ST12	1.38(35.1)	0.30 (7.5)	0.87 (22.2)
3/8	10	7/8-14	-JMC-AN6-ST14	1.50(38.1)	0.30(7.5)	1.00 (25.4)
1/2	12	9/16-18	-JMC-AN8-ST9	1.44(36.6)	0.30(7.5)	0.81 (20.6)
1/2	12	3/4-16	-JMC-AN8-ST12	1.48(37.6)	0.39(9.9)	0.87 (22.2)
1/2	12	7/8-14	-JMC-AN8-ST14	1.60(40.6)	0.39(9.9)	1.00 (25.4)
1/2	12	1 1/16-12	-JMC-AN8-ST17	1.76(44.7)	0.39(9.9)	1.25 (31.8)
5/8	16	3/4-16	-JMC-AN10-ST12	1.60(40.6)	0.42(10.7)	0.94 (23.8)
5/8	16	7/8-14	-JMC-AN10-ST14	1.70(43.1)	0.48(12.3)	1.00 (25.4)
5/8	16	1 1/16-12	-JMC-AN10-ST17	1.86(47.2)	0.48(12.3)	1.25 (31.8)
3/4	18	3/4-16	-JMC-AN12-ST12	1.78(45.2)	0.42(10.7)	1.13 (28.6)
3/4	18	7/8-14	-JMC-AN12-ST14	1.83(46.4)	0.50(12.7)	1.13 (28.6)
3/4	18	1 1/16-12	-JMC-AN12-ST17	1.97(50.0)	0.61(15.5)	1.25 (31.8)
3/4	18	1 5/16-12	-JMC-AN12-ST21	2.00(50.8)	0.61(15.5)	1.50(38.1)
7/8	22	1 3/16-12	-JMC-AN14-ST19	1.99(50.5)	0.72(18.3)	1.37 (34.9)
7/8	22	1 5/16-12	-JMC-AN14-ST21	2.02(51.3)	0.72(18.3)	1.50(38.1)
1	25	1 1/16-12	-JMC-AN16-ST17	2.01(51.1)	0.66(16.7)	1.37 (34.9)
1	25	1 3/16-12	-JMC-AN16-ST19	2.04(51.8)	0.72(18.3)	1.37 (34.9)
1	25	1 5/16-12	-JMC-AN16-ST21	2.04(51.8)	0.85(21.5)	1.50(38.1)

Male Connectors-NPT

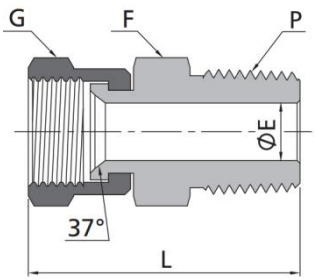

T-Tube O.D		P-NPT Size	Basic Ordering Number	Dimension, in. (mm)			
In.	mm			L	E	G	F (Hex)
1/8	3	1/8	-JMC-AS2-MN2	1.18(30.0)	0.06(1.6)	0.44(11.1)	0.44(11.1)
3/16	4	1/8	-JMC-AS3-MN2	1.26(32.0)	0.13 (3.2)	0.50 (12.7)	0.44(11.1)
1/4	6	1/8	-JMCAS4-MN2	1.35(34.2)	0.17 (4.4)	0.56(14.3)	0.50(12.7)
5/16	8	1/8	-JMC-AS5-MN2	1.38(35.0)	0.24 (6.0)	0.63(15.9)	0.56(14.3)
3/8	10	1/4	-JMC-AS6-MN4	1.58(40.2)	0.30 (7.5)	0.69(17.5)	0.63(15.9)
1/2	12	3/8	-JMC-AS8-MN6	1.68(42.7)	0.39 (9.9)	0.87(22.2)	0.81(20.6)
5/8	16	1/2	--JMC-AS10-MN8	2.02(51.3)	0.48(12.3)	1.00(25.4)	0.94(23.8)
3/4	18	3/4	-JMC-AS12-MN12	2.15(54.5)	0.61(15.5)	1.25(31.8)	1.13(28.6)
7/8	22	3/4	-JMC-AS14-MN12	2.20(56.0)	0.71 (18.0)	1.37 (34.9)	1.25(31.8)
1	25	1	-JMC-AS16-MN16	2.51(63.7)	0.85(21.5)	1.50 (38.1)	1.37(34.9)
1 1/4	32	1 1/4	-JMC-AS20-MN20	2.71(68.9)	1.08 (27.5)	2.00 (50.8)	1.69(42.9)
1 1/2	38	1 1/2	-JMC-AS24-MN24	3.06(77.6)	1.30 (33.0)	2.25 (57.2)	2.00(50.8)
2	50	2	-JMC-AS32-MN32	3.66(92.9)	1.77 (45.0)	2.87 (73.0)	2.63(66.7)

Female Connectors-NPT

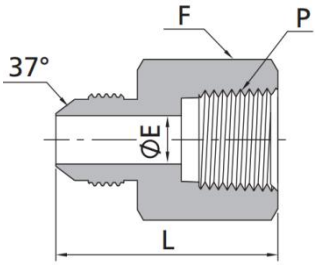

T-Tube O.D		P-NPT	Basic Ordering	Dimension, in. (mm)		
In.	mm	Size	Number	L	E	F (Hex)
1/8	3	1/8	-JFC-AN2-FN2	1.12(28.4)	0.06(1.6)	0.56(14.3)
3/16	4	1/8	-JFC-AN3-FN2	1.13 (28.7)	0.13(3.2)	0.56(14.3)
1/4	6	1/8	-JFC-AN4-FN2	1.13 (28.7)	0.17 (4.4)	0.56(14.3)
1/4	6	1/4	-JFC-AN4-FN4	1.39 (35.3)	0.17 (4.4)	0.75 (19.1)
5/16	8	1/8	-JFC-AN5-FN2	1.17 (29.7)	0.24 (6.0)	0.56(14.3)
5/16	8	1/4	-JFC-AN5-FN4	1.39 (35.3)	0.24 (6.0)	0.75 (19.1)
3/8	10	1/4	-JFC-AN6-FN4	1.40 (35.6)	0.30 (7.5)	0.75 (19.1)
3/8	10	3/8	-JFC-AN6-FN6	1.46 (37.1)	0.30 (7.5)	0.87 (22.2)
1/2	12	3/8	-JFC-AN8-FN6	1.56 (39.6)	0.39 (9.9)	0.87 (22.2)
1/2	12	1/2	-JFC-AN8-FN8	1.80 (45.6)	0.39 (9.9)	1.13 (28.6)
5/8	16	1/2	-CJFC-AN10-FN8	1.89 (48.0)	0.48(12.3)	1.13 (28.6)
3/4	18	1/2	-JFC-AN12-FN8	2.05 (52.1)	0.61(15.5)	1.13 (28.6)
3/4	18	3/4	-JFC-AN12-FN12	2.06 (52.3)	0.61(15.5)	1.37 (34.9)
7/8	22	3/4	-JFC-AN14-FN12	2.06 (52.3)	0.72(18.3)	1.37 (34.9)
1	25	1	-JFC-AN16-FN16	2.35 (59.7)	0.85 (21.5)	1.63 (41.3)
1 1/4	32	1 1/4	-JFC-AN20-FN20	2.49 (63.2)	1.08 (27.5)	2.00 (50.8)
1 1/2	38	1 1/2	-JFC-AN24-FN24	2.62 (66.5)	1.30 (33.0)	2.37 (60.3)
2	50	2	-JFC-AN32-FN32	2.97 (75.4)	1.77 (45.0)	2.87 (73.0)

Female Connectors-NPT

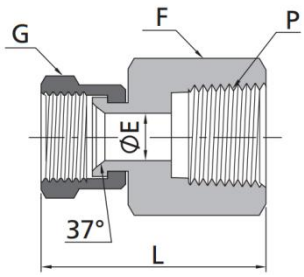

T-Tube O.D		P-NPT	Basic Ordering	Dimension, in. (mm)			
In	mm	Size	Number	L	E	G	F (Hex)
1/8	3	1/8	-JFC-AS2-FN2	1.42 (36.1)	0.06(1.6)	0.44(11.1)	0.56(14.3)
3/16	4	1/8	-JFC-AS3-FN2	1.47 (37.3)	0.13(3.2)	0.50(12.7)	0.56(14.3)
1/4	6	1/8	-JFC-AS4-FN2	1.56 (39.7	0.17 (4.4)	0.56(14.3)	0.56(14.3)
5/16	8	1/8	-JFC-AS5-FN4	1.59 (40.5)	0.24 (6.0)	0.63(15.9)	0.56(14.3)
3/8	10	1/4	-JFC-AS6-FN4	1.80 (45.8)	0.30 (7.5)	0.69(17.5)	0.75 (19.1)
1/2	12	3/8	-JFC-AS8-FN8	1.85 (47.0)	0.39 (9.9)	0.87(22.2)	0.87 (22.2)
5/8	16	1/2	-CJFC-AS10-FN8	2.03 (51.6)	0.48 (12.3)	1.00(25.4)	1.13 (28.6)
3/4	18	3/4	-JFC-AS12-FN12	2.62 (66.6)	0.61 (15.5)	1.25(31.8)	1.37 (34.9)
7/8	22	3/4	-JFC-AS14-FN12	2.67 (67.8)	0.71(18.0)	1.37(34.9)	1.37 (34.9)
1	25	1	-JFC-AS16-FN16	2.89 (73.5)	0.85 (21.5)	1.50(38.1)	1.63 (41.3)
1 1/4	32	1 1/4	-JFC-AS20-FN20	3.07 (78.1)	1.08 (27.5)	2.00(50.8)	2.00 (50.8)
1 1/2	38	1 1/2	-JFC-AS24-FN24	3.41 (86.7)	1.30 (33.0)	2.37(60.3)	2.37 (60.3)
2	50	2	-JFC-AS32-FN32	3.52 (89.3)	1.77 (45.0)	2.87(73.0)	2.87 (73.0)

Reducing Adapters

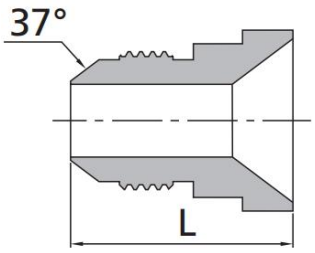

Tube O.D.		Basic Ordering Number	L
in.-mm	in.-mm		in.(mm)
3/8-10	1/4-6	-RA-AN6-AN4	0.97 (24.6)
1/2-12	1/4-6	-RA-AN8-AN4	1.00 (25.4)
1/2-12	3/8-10	-RA-AN8-AN6	1.00 (25.4)
5/8-16	1/4-6	-RA-AN10-AN4	1.03 (26.2)
5/8-16	3/8-10	-RA-AN10-AN6	1.03 (26.2)
3/4-18	1/4-6	-RA-AN12-AN4	1.09 (27.7)
3/4-18	3/8-10	-RA-AN12-AN6	1.09 (27.7)
3/4-18	1/2-12	-RA-AN12-AN8	1.19 (30.2)
7/8-22	3/8-10	-RA-AN14-AN6	1.13 (28.7)
7/8-22	5/8-16	-RA-AN14-AN10	1.33 (33.7)
1-25	1/4-6	-RA-AN16-AN4	1.22 (31.0)
1-25	3/8-10	-RA-AN16-AN6	1.22 (31.0)
1-25	1/2-12	-RA-AN16-AN8	1.27 (32.3)
1-25	5/8-16	-RA-AN16-AN10	1.38 (35.1)
1-25	3/4-18	-RA-AN16-AN12	1.47 (37.3)
1 1/4-32	3/4-18	-RA-AN20-AN12	1.53 (38.8)
1 1/4-32	1-25	-RA-AN20-AN16	1.59 (40.3)
1 1/2-38	1/2-12	-RA-AN24-AN8	1.56 (39.6)
1 1/2-38	3/4-18	-RA-AN24-AN12	1.63 (41.4)
1 1/2-38	1-25	-RA-AN24-AN16	1.63 (41.4)
2-50	1 1/2-38	-RA-AN32-AN24	1.91 (48.5)

Bulkhead Unions

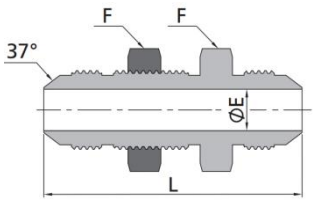

Tube O.D.		Basic Ordering Number	Dimensions, in. (mm)		
in.	mm		L	E	F (Hex)
3/16	4	-JBU-AN3	1.90 (48.3)	0.13 (3.2)	0.63 (15.9)
1/4	6	-JBU-AN4	2.07 (52.6)	0.17 (4.4)	0.69 (17.5)
5/16	8	-JBU-AN5	2.07 (52.6)	0.24 (6.0)	0.75 (19.1)
3/8	10	-JBU-AN6	2.18 (55.4)	0.30 (7.5)	0.81 (20.6)
1/2	12	-JBU-AN8	2.44 (62.0)	0.39 (9.9)	1.00 (25.4)
5/8	16	-JBU-AN10	2.74 (69.6)	0.48 (12.3)	1.13 (28.6)
3/4	18	-JBU-AN12	3.09 (78.5)	0.61 (15.5)	1.37 (34.9)
7/8	22	-JBU-AN14	3.12 (79.2)	0.72 (18.3)	1.50 (38.1)
1	25	-JBU-AN16	3.14 (79.8)	0.85 (21.5)	1.63 (41.3)
1 1/4	32	-JBU-AN20	3.31 (84.1)	1.08 (27.5)	1.87 (47.6)
1 1/2	38	-JBU-AN24	3.52 (89.4)	1.30 (33.0)	2.13 (54.0)
2	50	-JBU-AN32	4.20 (106.7)	1.77 (45.0)	2.75 (69.9)

Male Elbows-NPT

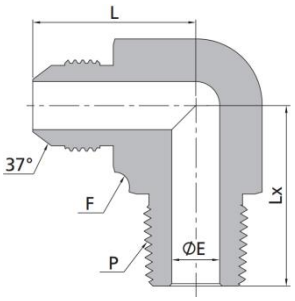

T-Tube O.D		P-NPT	Basic Ordering	Dimension, in. (mm)			
In.	mm	Size	Number	L	E	F (Flat)	Lx
1/8	3	1/8	-JME-AN2-MN2	0.77 (19.6)	0.06(1.6)	0.44(11.1)	0.72 (18.3)
3/16	4	1/8	-JME-AN3-MN2	0.83 (21.1)	0.13(3.2)	0.44(11.1)	0.72(18.3)
1/4	6	1/8	-JME-AN4-MN2	0.89 (22.6)	0.17(4.4)	0.50(12.7)	0.78 (19.8)
1/4	6	1/4	-JME-AN4-MN4	1.06 (26.9)	0.17(4.4)	0.56(14.3)	1.09 (27.7)
5/16	8	1/8	-JME-AN5-MN2	0.95 (24.1)	0.19(4.8)	0.56(14.3)	0.78 (19.8)
5/16	8	1/4	-JME-AN5-MN4	1.06 (26.9)	0.24(6.0)	0.56(14.3)	1.09 (27.7)
3/8	10	1/8	-JME-AN6-MN2	1.06 (26.9)	0.19(4.8)	0.56(14.3)	0.90 (22.8)
3/8	10	1/4	-JME-AN6-MN4	1.06 (26.9)	0.28(7.1)	0.56(14.3)	1.09 (27.7)
3/8	10	3/8	-JME-AN6-MN6	1.14 (29.0)	0.30(7.5)	0.69(17.5)	1.22 (31.0)
3/8	10	1/2	-JME-AN6-MN8	1.23 (31.2)	0.30(7.5)	0.81(20.6)	1.47 (37.3)
1/2	12	1/4	-JME-AN8-MN4	1.25 (31.8)	0.28(7.1)	0.81(20.6)	1.22 (31.0)
1/2	12	3/8	-JME-AN8-MN6	1.25 (31.8)	0.39(9.9)	0.81(20.6)	1.22 (31.0)
1/2	12	1/2	-JME-AN8-MN8	1.33 (33.7)	0.39(9.9)	0.81(20.6)	1.47 (37.3)
1/2	12	3/4	-JME-AN8-MN12	1.42 (36.0)	0.35(9.0)	1.00(25.4)	1.59(40.4)
5/8	16	3/8	-JME-AN10-MN6	1.45 (36.8)	0.39(9.9)	0.81(20.6)	1.30 (33.0)
5/8	16	1/2	-JME-AN10-MN8	1.45 (36.8)	0.48(12.3)	0.81(20.6)	1.47 (37.3)
5/8	16	3/4	-JME-AN10-MN12	1.53 (38.9)	0.48(12.3)	1.00(25.4)	1.59(40.4)
3/4	18	3/4	-JME-AN12-MN12	1.66 (42.2)	0.61(15.5)	1.06(27.0)	1.59(40.4)
3/4	18	1	-JME-AN12-MN16	1.66 (42.2)	0.61(15.5)	1.25(31.8)	1.98(50.4)
7/8	22	3/4	-JME-AN14-MN12	1.80 (45.7)	0.72(18.3)	1.25(31.8)	1.69(42.9)
1	25	3/4	-JME-AN16-MN12	1.81 (46.0)	0.72(18.3)	1.37(34.9)	1.78(45.2)
1	25	1	-JME-AN16-MN16	1.81 (46.0)	0.85(21.5)	1.37 (34.9)	1.97 (50.0)
1 1/4	32	1	-JME-AN20-NM16	2.06 (52.3)	0.94(23.8)	1.69(42.9)	2.35 (59.6)
1 1/4	32	1 1/4	-JME-AN20-MN20	2.06 (52.3)	1.08(27.5)	1.69(42.9)	2.38 (60.5)
1 1/2	38	1 1/2	-JME-AN24-MN24	2.33 (59.2)	1.30(33.0)	2.00(50.8)	2.64 (67.1)
2	50	2	-JME-AN32-MN32	3.06 (77.7)	1.77 (45.0)	2.50(63.5)	3.00 (76.2)

Adjustable Male Elbows-SAE

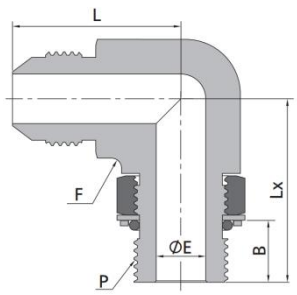

T-Tube O.D		P-SAE	Basic	Dimension, in. (mm)				
In.	mm		Ordering Thread Number Size	L	E	F (Flat)	Lx	B
1/8	3	5/16-24	-AME-AN2-ST5	0.77(19.6)	0.06(1.6)	0.44(11.1)	0.94(23.9)	0.33 (8.4)
3/16	4	3/8-24	-AME-AN3-ST6	0.83(21.1)	0.13(3.2)	0.44(11.1)	0.94(23.9)	0.33 (8.4)
1/4	6	7/16-20	-AME-AN4-ST7	0.89(22.6)	0.17(4.4)	0.50(12.7)	1.03(26.2)	0.39 (9.8)
5/16	8	1/2-20	-AME-AN5-ST8	0.95(24.1)	0.24(6.0)	0.56(14.3)	1.13(28.7)	0.39 (9.8)
3/8	10	9/16-18	-AME-AN6-ST9	1.06(26.9)	0.30(7.5)	0.63(15.9)	1.25(31.8)	0.43(11.0)
1/2	12	3/4-16	-AME-AN8-ST12	1.25(31.8)	0.39(9.9)	0.81(20.6)	1.45(36.8)	0.49 (12.5)
5/8	16	7/8-14	-AME-AN10-ST14	1.45(36.8)	0.48(12.3)	0.94(23.8)	1.70(43.2)	0.56 (14.2)
3/4	18	1 1/16-12	-AME-AN12-ST17	1.66(42.2)	0.61(15.5)	1.25(31.8)	1.94(49.3)	0.65 (16.5)
7/8	22	1 3/16-12	-AME-AN14ST19	1.80(45.7)	0.72(18.3)	1.25(31.8)	2.00(50.8)	0.65 (16.5)
1	25	1 5/16-12	-AME-AN16-ST21	1.81(46.0)	0.85(21.5)	1.37(34.9)	2.05(52.1)	0.65 (16.5)
1 1/4	32	1 5/8-12	-AME-AN20ST26	2.06(52.3)	1.08(27.5)	1.69(42.9)	2.25(57.2)	0.65 (16.5)
1 1/2	38	1 7/8-12	-AME-AN24-ST30	2.33(59.2)	1.30(33.0)	2.00(50.8)	2.39(60.7)	0.65 (16.5)
2	50	2 1/2-12	-AME-AN32-ST40	3.06(77.7)	1.77(45.0)	2.50(63.5)	2.89(73.4)	0.65 (16.5)

45° Male Elbows-NPT

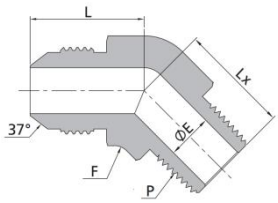

T-Tube O.D		P-NPT Size	Basic Ordering Number	Dimension, in. (mm)			
In.	mm			L	E	F (Flat)	Lx
1/8	3	1/8	-JMV-AN2-MN2	0.69 (17.5)	0.06 (1.6)	0.44 (11.1)	0.52 (13.2)
3/16	4	1/8	-JMV-AN3-MN2	0.69 (17.5)	0.13 (3.2)	0.44 (11.1)	0.52 (13.2)
1/4	6	1/8	-JMV-AN4-MN2	0.72 (18.3)	0.17 (4.4)	0.50 (12.7)	0.64 (16.3)
5/16	8	1/8	-JMV-AN5-MN2	0.77 (19.6)	0.19 (4.8)	0.56 (14.3)	0.64 (16.3)
3/8	10	1/4	-JMV-AN6-MN4	0.83 (21.1)	0.28 (7.1)	0.56 (14.3)	0.86 (21.8)
1/2	12	3/8	-JMV-AN8-MN6	0.98 (24.9)	0.39 (9.9)	0.69 (17.5)	0.95 (24.1)
5/8	16	1/2	-JMV-AN10-MN8	1.11 (28.2)	0.48 (12.3)	0.81 (20.6)	1.17 (29.7)
3/4	18	3/4	-JMV-AN12-MN12	1.28 (32.5)	0.61 (15.5)	1.06 (27.0)	1.20 (30.5)
7/8	22	3/4	-JMV-AN14-MN12	1.45 (36.8)	0.72 (18.3)	1.25 (31.8)	1.30 (33.0)
1	25	1	-JMV-AN16-MN16	1.47 (37.3)	0.85 (21.5)	1.37 (34.9)	1.48 (37.6)
1 1/4	32	1 1/4	-JMV-AN20-MN20	1.59 (40.4)	1.08 (27.5)	1.69 (42.9)	1.67 (42.4)
1 1/2	38	1 1/2	-JMV-AN24-MN24	1.78 (45.2)	1.30(33.0)	2.00 (50.8)	1.77 (45.0)
2	50	2	-JMV-AN32-MN32	2.22 (56.4)	1.77 (45.0)	2.50 (63.5)	2.11 (53.6)

Female Elbows-NPT

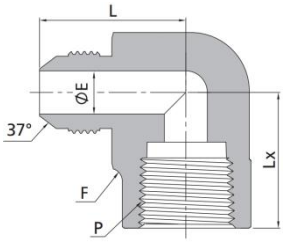

T-Tube O.D		P-NPT Size	Basic Ordering Number	Dimension, in. (mm)			
In.	mm			L	E	F (Flat)	Lx
1/8	3	1/8	-JFE-AN2-FN2	1.00(25.4)	0.06 (1.6)	0.56 (14.3)	0.66(16.8)
3/16	4	1/8	-JFE-AN3-FN2	1.03(26.2)	0.13(3.2)	0.56 (14.3)	0.66(16.8)
1/4	6	1/8	-JFE-AN4-FN2	1.08 (27.4)	0.17 (4.4)	0.56 (14.3)	0.66(16.8)
1/4	6	1/4	-JFE-AN4-FN4	1.22 (30.9)	0.17 (4.4)	0.81 (20.6)	0.88(22.4)
5/16	8	1/8	-JFE-AN5-FN2	1.08 (27.4)	0.24 (6.0)	0.56 (14.3)	0.66(16.8)
5/16	8	1/4	-JFE-AN5-FN4	1.22 (30.9)	0.24 (6.0)	0.81 (20.6)	0.88(22.4)
3/8	10	1/8	-JFE-AN6-FN2	1.06 (26.9)	0.30 (7.5)	0.63 (15.9)	0.66 (16.8)
3/8	10	1/4	-JFE-AN6-FN4	1.23 (31.2)	0.30 (7.5)	0.81 (20.6)	0.88(22.4)
3/8	10	3/8	-JFE-AN6-FN6	1.31 (33.2)	0.30 (7.5)	0.94(23.8)	1.02(25.9)
1/2	12	1/4	-JFE-AN8-FN4	1.24(31.6)	0.39 (9.9)	0.81 (20.6)	0.88 (22.4)
1/2	12	3/8	-JFE-AN8-FN6	1.42 (36.1)	0.39 (9.9)	0.94 (23.8)	1.02 (25.9)
1/2	12	1/2	-JFE-AN8-FN8	1.42 (36.1)	0.39 (9.9)	1.06 (27.0)	1.23 (31.2)
5/8	16	1/2	-JFE-AN10-FN8	1.64 (41.7)	0.48(12.3)	1.06(27.0)	1.23(31.2)
3/4	18	1/2	-JFE-AN12-FN8	1.66(42.1)	0.61(15.5)	1.25 (31.8)	1.23 (31.2)
3/4	18	3/4	-JFE-AN12-FN12	1.89 (48.0)	0.61(15.5)	1.37 (34.9)	1.36 (34.5)
7/8	22	3/4	-JFE-AN14-FN12	1.86(47.2)	0.72(18.3)	1.37 (34.9)	1.42 (36.1)
1	25	1	-JFE-AN16-FN16	2.17 (55.1)	0.85(21.5)	1.69 (42.9)	1.62 (41.1)
1 1/4	32	1 1/4	-JFE-AN20-FN20	2.33(59.2)	1.08(27.5)	2.00 (50.8)	1.70 (43.2)
1 1/2	38	1 1/2	-JFE-AN24-FN24	2.89 (73.4)	1.30(33.0)	2.50 (63.5)	2.08 (52.8)
2	50	2	-JFE-AN32-FN32	3.30 (83.8)	1.77(45.0)	2.50 (63.5)	2.39 (60.7)

Union Elbows

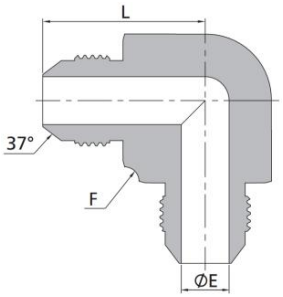

Tube O.D.		Basic Ordering Number	Dimensions, in. (mm)		
in.	mm		L	E	F (Flat)
1/8	3	-JUE-AN2	0.77 (19.6)	0.06 (1.6)	0.44 (11.1)
3/16	4	-JUE-AN3	0.83 (21.1)	0.13 (3.2)	0.44 (11.1)
1/4	6	-JUE-AN4	0.89 (22.6)	0.17 (4.4)	0.50 (12.7)
5/16	8	-JUE-AN5	0.95 (24.1)	0.24 (6.0)	0.56 (14.3)
3/8	10	-JUE-AN6	1.06 (26.9)	0.30 (7.5)	0.56 (14.3)
1/2	12	-JUE-AN8	1.25 (31.8)	0.39 (9.9)	0.81 (20.6)
5/8	16	-JUE-AN10	1.45 (36.8)	0.48 (12.3)	0.81 (20.6)
3/4	18	-JUE-AN12	1.66 (42.2)	0.61 (15.5)	1.06 (27.0)
7/8	22	-JUE-AN14	1.80 (45.7)	0.72 (18.3)	1.25 (31.8)
1	25	-JUE-AN16	1.81 (46.0)	0.85 (21.5)	1.37 (34.9)
1 1/4	32	-JUE-AN20	2.06 (52.3)	1.08 (27.5)	1.69 (42.9)
1 1/2	38	-JUE-AN24	2.33 (59.2)	1.30 (33.0)	2.00 (50.8)
2	50	-JUE-AN32	3.06 (77.7)	1.77 (45.0)	2.50 (63.5)

Union Swivel Elbows

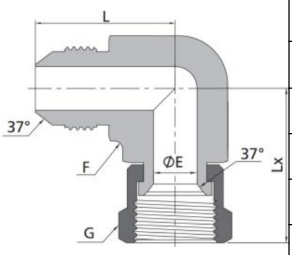

Tube O.D.		Basic Ordering Number	Dimensions, in. (mm)				
in.	m		L	E	F (Flat)	Lx	G (Hex)
1/8	3	-USE-AN2-AS2	0.77(19.6)	0.06(1.6)	0.44(11.1)	0.97(24.6)	0.44(11.1)
3/16	4	-USE-AN3-AS3	0.83(19.6)	0.13(3.2)	0.44(11.1)	1.00(25.4)	0.50(12.7)
1/4	6	-USE-AN4-AS4	0.89(22.6)	0.17(4.4)	0.50(12.7)	1.00(25.4)	0.56(14.3)
5/16	8	-USE-AN5-AS5	0.95(24.1)	0.24(6.0)	0.56(14.3)	1.06(26.9)	0.63(15.9)
3/8	10	-USE-AN6-AS5	1.06(26.9)	0.30(7.5)	0.56(14.3)	1.25(31.8)	0.69(17.5)
1/2	12	-USE-AN8-AS8	1.25(31.8)	0.39(9.9)	0.81(20.6)	1.38(35.1)	0.87(22.2)
5/8	16	-USE-AN10-AS10	1.45(36.8)	0.48(12.3)	0.81(20.6)	1.62(41.1)	1.00(25.4)
3/4	18	-USE-AN12-AS12	1.66(42.2)	0.61(15.5)	1.06(26.9)	1.75(44.4)	1.25(31.8)
7/8	22	-USE-AN14-AS14	1.80(45.7)	0.72(18.3)	1.25(31.8)	1.78(45.2)	1.06(26.9)
1	25	-USE-AN16-AS16	1.81(46.0)	0.85(21.5)	1.37(34.9)	2.00(50.8)	1.50(38.1)
1 1/4	32	-USE-AN20-AS20	2.06(52.3)	1.08(27.5)	1.69(42.9)	2.31(58.7)	2.00(50.8)
1 1/2	38	-USE-AN24-AS24	2.33(59.2)	1.30(33.0)	2.00(50.8)	2.59(65.8)	2.37(60.3)
2	50	-USE-AN32-AS32	3.06(77.7)	1.77(45.0)	2.50(63.5)	3.38(85.9)	2.87(73.0)

Male Branch Tee-NPT

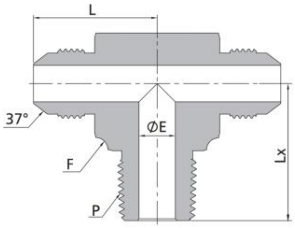

T-Tube O.D		P-NPT	Basic Ordering	Dimension, in. (mm)			
In.	mm	Size	Number	L	E	F (Flat)	Lx
1/8	3	1/8	-MBT-AN2-MN2	0.77 (19.6)	0.06 (1.6)	0.44 (11.1)	0.72 (18.3)
3/16	4	1/8	-MBT-AN3-MN2	0.83 (21.1)	0.13 (3.2)	0.44 (11.1)	0.72 (18.3)
1/4	6	1/8	MBT-AN4-MN2	0.89 (22.6)	0.17 (4.4)	0.50 (12.7)	0.78 (19.8)
1/4	6	1/4	-MBT-AN4-MN4	1.06 (26.9)	0.17 (4.4)	0.56 (14.3)	1.09 (27.7)
5/16	8	1/8	-MBT-AN5-MN2	0.95 (24.1)	0.19 (4.8)	0.56 (14.3)	0.78 (19.8)
5/16	8	1/4	-MBT-AN5-MN4	1.06 (26.9)	0.24 (6.0)	0.56 (14.3)	1.09 (27.7)
3/8	10	1/8	-MBT-AN6-MN2	1.06 (26.9)	0.19 (4.8)	0.56 (14.3)	0.90 (22.8)
3/8	10	1/4	-MBT-AN6-MN4	1.06 (26.9)	0.28 (7.1)	0.56 (14.3)	1.09 (27.7)
3/8	10	3/8	-MBT-AN6-MN6	1.14 (29.0)	0.30 (7.5)	0.69 (17.5)	1.22 (31.0)
3/8	10	1/2	-MBT-AN6-MN8	1.23 (31.2)	0.30 (7.5)	0.81 (20.6)	1.47 (37.3)
1/2	12	1/4	-MBT-AN8-MN4	1.25 (31.8)	0.28 (7.1)	0.81 (20.6)	1.22 (31.0)
1/2	12	3/8	-MBT-AN8-MN6	1.25 (31.8)	0.39 (9.9)	0.81 (20.6)	1.22 (31.0)
1/2	12	1/2	-MBT-AN8-MN8	1.33 (33.7)	0.39 (9.9)	0.81 (20.6)	1.47 (37.3)
1/2	12	3/4	-MBT-AN8-MN12	1.42 (36.0)	0.39 (9.9)	1.00 (25.4)	1.59 (40.4)
5/8	16	3/8	-MBT-AN10-MN6	1.45 (36.8)	0.39 (9.9)	0.81 (20.6)	1.30 (33.0)
5/8	16	1/2	-MBT-AN10-MN8	1.45 (36.8)	0.48(12.3)	0.81 (20.6)	1.47 (37.3)
5/8	16	3/4	-MBT-AN10-MN12	1.53 (38.9)	0.48(12.3)	1.00 (25.4)	1.59 (40.4)
3/4	18	3/4	-MBT-AN12-MN12	1.66 (42.2)	0.61(15.5)	1.06 (27.0)	1.59 (40.4)
3/4	18	1	-MBT-AN12-MN16	1.66 (42.2)	0.61(15.5)	1.25 (31.8)	1.98 (50.4)
7/8	22	3/4	-MBT-AN14-MN12	1.80 (45.7)	0.72(18.3)	1.25 (31.8)	1.69 (42.9)
1	25	3/4	-MBT-AN16-MN12	1.81 (46.0)	0.72 (18.3)	1.37 (34.9)	1.78 (45.2)
1	25	1	MBT-AN16-MN16	1.81 (46.0)	0.85 (21.5)	1.37 (34.9)	1.97 (50.0)
1 1/4	32	1	MBT-AN20-MN16	2.06 (52.3)	0.94 (23.8)	1.69 (42.9)	2.35 (59.6)
1 1/4	32	1 1/4	MBT-AN20-MN20	2.06 (52.3)	1.08 (27.5)	1.69 (42.9)	2.38 (60.5)
1 1/2	38	1 1/2	MBT-AN24-MN24	2.33 (59.2)	1.30 (33.0)	2.00 (50.8)	2.64 (67.1)
2	50	2	MBT-AN32-MN32	3.06 (77.7)	1.77 (45.0)	2.50 (63.5)	3.00 (76.2)

Adjustable Male Branch Tees

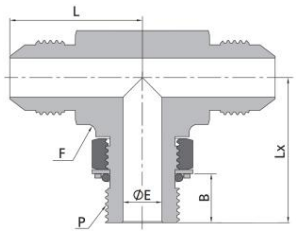

T-Tube O.D		P-SAE	Basic	Dimension, in. (mm)				
In.	mm	Thread Size	Ordering Number	L	E	F (Flat)	Lx	B
1/8	3	5/16-24	-AMB-AN2-ST5	0.77(19.6)	0.06(1.6)	0.44(11.1)	0.94(23.9)	0.33 (8.4)
3/16	4	3/8-24	-AMB-AN3-ST6	0.83(21.1)	0.13(3.2)	0.44(11.1)	0.94(23.9)	0.33 (8.4)
1/4	6	7/16-20	-AMB-AN4-ST7	0.89(22.6)	0.17(4.4)	0.50(12.7)	1.03(26.2)	0.39 (9.8)
5/16	8	1/2-20	-AMB-AN5-ST8	0.95(24.1)	0.24(6.0)	0.56(14.3)	1.13(28.7)	0.39 (9.8)
3/8	10	9/16-18	-AMB-AN6-ST9	1.06(26.9)	0.30(7.5)	0.63(15.9)	1.25(31.8)	0.43(11.0)
1/2	12	3/4-16	-AMB-AN8-ST12	1.25(31.8)	0.39(9.9)	0.81(20.6)	1.45(36.8)	0.49 (12.5)
5/8	16	7/8-14	-AMB-AN10-ST14	1.45(36.8)	0.48(12.3)	0.94(23.8)	1.70(43.2)	0.56 (14.2)
3/4	18	1 1/16-12	-AMB-AN12-ST17	1.66(42.2)	0.61(15.5)	1.25(31.8)	1.94(49.3)	0.65 (16.5)
7/8	22	1 3/16-12	-AMB-AN14ST19	1.80(45.7)	0.72(18.3)	1.25(31.8)	2.00(50.8)	0.65 (16.5)
1	25	1 5/16-12	-AMB-AN16-ST21	1.81(46.0)	0.85(21.5)	1.37(34.9)	2.05(52.1)	0.65 (16.5)
1 1/4	32	1 5/8-12	-AMB-AN20-ST26	2.06(52.3)	1.08(27.5)	1.69(42.9)	2.25(57.2)	0.65 (16.5)
1 1/2	38	1 7/8-12	-AME-AN24-ST30	2.33(59.2)	1.30(33.0)	2.00(50.8)	2.39(60.7)	0.65 (16.5)
2	50	2 1/2-12	-AME-AN32-ST40	3.06(77.7)	1.77(45.0)	2.50(63.5)	2.89(73.4)	0.65 (16.5)

Male Run Tees

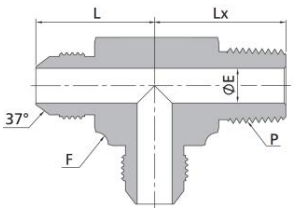

T-Tube O.D		P-NPT	Basic Ordering	Dimension, in. (mm)			
In.	mm	Size	Number	L	E	F (Flat)	Lx
1/8	3	1/8	-MRT-AN2-MN2	0.77 (19.6)	0.06 (1.6)	0.44 (11.1)	0.72(18.3)
3/16	4	1/8	-MRT-AN3-MN2	0.83 (21.1)	0.13 (3.2)	0.44 (11.1)	0.72(18.3)
1/4	6	1/8	-MRT-AN4-MN2	0.89 (22.6)	0.17 (4.4)	0.50 (12.7)	0.78(19.8)
1/4	6	1/4	-MRT-AN4-MN4	1.06 (26.9)	0.17 (4.4)	0.56 (14.3)	1.09(27.7)
5/16	8	1/8	-MRT-AN5-MN2	0.95 (24.1)	0.19 (4.8)	0.56 (14.3)	0.78(19.8)
5/16	8	1/4	-MRT-AN5-MN4	1.06 (26.9)	0.24 (6.0)	0.56 (14.3)	1.09(27.7)
3/8	10	1/8	-MRT-AN6-MN2	1.06 (26.9)	0.19 (4.8)	0.56 (14.3)	0.90(22.8)
3/8	10	1/4	-MRT-AN6-MN4	1.06 (26.9)	0.28 (7.1)	0.56 (14.3)	1.09(27.7)
3/8	10	3/8	-MRT-AN6-MN6	1.14 (29.0)	0.30 (7.5)	0.69 (17.5)	1.22(31.0)
3/8	10	1/2	-MRT-AN6-MN8	1.23 (31.2)	0.30 (7.5)	0.81 (20.6)	1.47(37.3)
1/2	12	1/4	-MRT-AN8-MN4	1.25 (31.8)	0.28 (7.1)	0.81 (20.6)	1.22(31.0)
1/2	12	3/8	-MRT-AN8-MN6	1.25 (31.8)	0.39 (9.9)	0.81 (20.6)	1.22(31.0)
1/2	12	1/2	-MRT-AN8-MN8	1.33 (33.7)	0.39 (9.9)	0.81 (20.6)	1.47(37.3)
1/2	12	3/4	-MRT-AN8-MN12	1.42 (36.0)	0.39 (9.9)	1.00 (25.4)	1.59 (40.4)
5/8	16	3/8	-MRT-AN10-MN6	1.45 (36.8)	0.39 (9.9)	0.81 (20.6)	1.30(33.0)
5/8	16	1/2	-MRT-AN10-MN8	1.45 (36.8)	0.48(12.3)	0.81 (20.6)	1.47(37.3)
5/8	16	3/4	-MRT-AN10-MN12	1.53 (38.9)	0.48(12.3)	1.00 (25.4)	1.59(40.4)
3/4	18	3/4	-MRT-AN12-MN12	1.66 (42.2)	0.61(15.5)	1.06 (27.0)	1.59(40.4)
3/4	18	1	-MRT-AN12-MN16	1.66 (42.2)	0.61(15.5)	1.25 (31.8)	1.98(50.4)
7/8	22	3/4	-MRT-AN14-MN12	1.80 (45.7)	0.72(18.3)	1.25 (31.8)	1.69(42.9)
1	25	3/4	-MRT-AN16-MN12	1.81 (46.0)	0.72 (18.3)	1.37 (34.9)	1.78(45.2)
1	25	1	-MRT-AN16-MN16	1.81 (46.0)	0.85 (21.5)	1.37 (34.9)	1.97(50.0)
1 1/4	32	1	-MRT-AN20-MN16	2.06 (52.3)	0.94 (23.8)	1.69 (42.9)	2.35(59.6)
1 1/4	32	1 1/4	-MRT-AN20-MN20	2.06 (52.3)	1.08 (27.5)	1.69 (42.9)	2.38(60.5)
1 1/2	38	1 1/2	-MRT-AN24-MN24	2.33 (59.2)	1.30 (33.0)	2.00 (50.8)	2.64(67.1)
2	50	2	-MRT-AN32-MN32	3.06 (77.7)	1.77 (45.0)	2.50 (63.5)	3.00(76.2)

Female Branch Tees

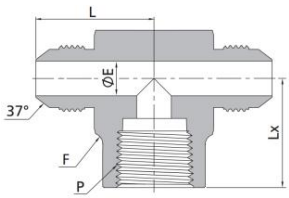

T-Tube O.D		P-NPT	Basic Ordering	Dimension, in. (mm)			
In.	mm	Size	Number	L	E	F (Flat)	Lx
1/8	3	1/8	-FBT-AN2-FN2	1.00 (25.4)	0.06 (1.6)	0.56 (14.3)	0.66 (16.8)
3/16	4	1/8	-FBT-AN3-FN2	1.03 (26.2)	0.13 (3.2)	0.56 (14.3)	0.66 (16.8)
1/4	6	1/8	-FBT-AN4-FN2	1.08 (27.4)	0.17 (4.4)	0.56 (14.3)	0.66 (16.8)
1/4	6	1/4	-FBT-AN4-FN4	1.22 (30.9)	0.17 (4.4)	0.81 (20.6)	0.88 (22.4)
5/16	8	1/8	-FBT-AN5-FN2	1.08 (27.4)	0.24 (6.0)	0.56 (14.3)	0.66 (16.8)
5/16	8	1/4	-FBT-AN5-FN4	1.22 (30.9)	0.24 (6.0)	0.81 (20.6)	0.88 (22.4)
3/8	10	1/8	-FBT-AN6-FN2	1.06 (26.9)	0.30 (7.5)	0.63 (15.9)	0.66 (16.8)
3/8	10	1/4	-FBT-AN6-FN4	1.23 (31.2)	0.30 (7.5)	0.81 (20.6)	0.88 (22.4)
3/8	10	3/8	-FBT-AN6-FN6	1.31 (33.2)	0.30 (7.5)	0.94 (23.8)	1.02 (25.9)
1/2	12	1/4	-FBT-AN8-FN4	1.24 (31.6)	0.39 (9.9)	0.81 (20.6)	0.88 (22.4)
1/2	12	3/8	-FBT-AN8-FN6	1.42 (36.1)	0.39 (9.9)	0.94 (23.8)	1.02 (25.9)
1/2	12	1/2	-FBT-AN8-FN8	1.42 (36.1)	0.39 (9.9)	1.06 (27.0)	1.23 (31.2)
5/8	16	1/2	-FBT-AN10-FN8	1.64 (41.7)	0.48 (12.3)	1.06 (27.0)	1.23 (31.2)
3/4	18	1/2	-FBT-AN12-FN8	1.66 (42.1)	0.61 (15.5)	1.25 (31.8)	1.23 (31.2)
3/4	18	3/4	-FBT-AN12-FN12	1.89 (48.0)	0.61 (15.5)	1.37 (34.9)	1.36 (34.5)
7/8	22	3/4	-FBT-AN14-FN12	1.86 (47.2)	0.72 (18.3)	1.37 (34.9)	1.42 (36.1)
1	25	1	-FBT-AN16-FN16	2.17 (55.1)	0.85 (21.5)	1.69 (42.9)	1.62 (41.1)
1 1/4	32	1 1/4	-FBT-A20-FN20	2.33 (59.2)	1.08 (27.5)	2.00 (50.8)	1.70 (43.2)
1 1/2	38	1 1/2	-FBT-AN24-FN24	2.89 (73.4)	1.30(33.0)	2.50 (63.5)	2.08 (52.8)
2	50	2	-FBT-AN32-FN32	3.30 (83.8)	1.77(45.0)	2.50 (63.5)	2.39 (60.7)

Female Run Tees

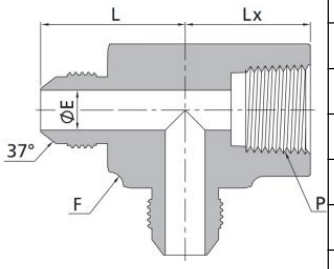

T-Tube O.D		P-NP	Basic Ordering Number	Dimension, in. (mm)			
In.	mm	T Size		L	E	F (Flat)	Lx
1/8	3	1/8	-FRT-AN2-FN2	1.00 (25.4)	0.06 (1.6)	0.56 (14.3)	0.66(16.8)
3/16	4	1/8	-FRT-AN3-FN2	1.03 (26.2)	0.13 (3.2)	0.56 (14.3)	0.66(16.8)
1/4	6	1/8	-FRT-AN4-FN2	1.08 (27.4)	0.17 (4.4)	0.56 (14.3)	0.66(16.8)
1/4	6	1/4	-FRT-AN4-FN4	1.22 (30.9)	0.17 (4.4)	0.81 (20.6)	0.88(22.4)
5/16	8	1/8	-FRT-AN5-FN2	1.08 (27.4)	0.24 (6.0)	0.56 (14.3)	0.66(16.8)
5/16	8	1/4	-FRT-AN5-FN4	1.22 (30.9)	0.24 (6.0)	0.81 (20.6)	0.88(22.4)
3/8	10	1/8	-FRT-AN6-FN2	1.06 (26.9)	0.30 (7.5)	0.63 (15.9)	0.66 (16.8)
3/8	10	1/4	-FRT-AN6-FN4	1.23 (31.2)	0.30 (7.5)	0.81 (20.6)	0.88 (22.4)
3/8	10	3/8	-FRT-AN6-FN6	1.31 (33.2)	0.30 (7.5)	0.94 (23.8)	1.02 (25.9)
1/2	12	1/4	-FRT-AN8-FN4	1.24 (31.6)	0.39 (9.9)	0.81 (20.6)	0.88 (22.4)
1/2	12	3/8	-FRT-AN8-FN6	1.42 (36.1)	0.39 (9.9)	0.94 (23.8)	1.02 (25.9)
1/2	12	1/2	-FRT-AN8-FN8	1.42 (36.1)	0.39 (9.9)	1.06 (27.0)	1.23 (31.2)
5/8	16	1/2	-FRT-AN10-FN8	1.64 (41.7)	0.48 (12.3)	1.06 (27.0)	1.23 (31.2)
3/4	18	1/2	-FRT-AN12-FN8	1.66 (42.1)	0.61 (15.5)	1.25 (31.8)	1.23 (31.2)
3/4	18	3/4	-FRT-AN12-FN12	1.89 (48.0)	0.61 (15.5)	1.37 (34.9)	1.36 (34.5)
7/8	22	3/4	-FRT-AN14-FN12	1.86 (47.2)	0.72 (18.3)	1.37 (34.9)	1.42 (36.1)
1	25	1	-FRT-AN16-FN16	2.17 (55.1)	0.85 (21.5)	1.69 (42.9)	1.62 (41.1)
1 1/4	32	1 1/4	-FRT-A20-FN20	2.33 (59.2)	1.08 (27.5)	2.00 (50.8)	1.70 (43.2)
1 1/2	38	1 1/2	-FRT-AN24-FN24	2.89 (73.4)	1.30(33.0)	2.50 (63.5)	2.08(52.8)
2	50	2	-FRT-AN32-FN32	3.30 (83.8)	1.77(45.0)	2.50 (63.5)	2.39(60.7)

Union Tees

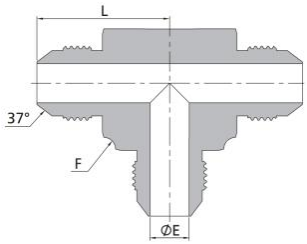

Tube O.D.		Basic Ordering Number	Dimensions, in. (mm)		
in.	mm		L	E	F (Flat)
1/8	3	-JUT-AN2	0.77 (19.6)	0.06 (1.6)	0.44 (11.1)
3/16	4	-JUT-AN3	0.83 (21.1)	0.13 (3.2)	0.44 (11.1)
1/4	6	-JUT-AN4	0.89 (22.6)	0.17 (4.4)	0.50 (12.7)
5/16	8	-JUT-AN5	0.95 (24.1)	0.24 (6.0)	0.56 (14.3)
3/8	10	-JUT-AN6	1.06 (26.9)	0.30 (7.5)	0.56 (14.3)
1/2	12	-JUT-AN8	1.25 (31.8)	0.39 (9.9)	0.81 (20.6)
5/8	16	-JUT-AN10	1.45 (36.8)	0.48 (12.3)	0.81 (20.6)
3/4	18	-JUT-AN12	1.66 (42.2)	0.61 (15.5)	1.06 (27.0)
7/8	22	-JUT-AN14	1.80 (45.7)	0.72 (18.3)	1.25 (31.8)
1	25	-JUT-AN16	1.81 (46.0)	0.85 (21.5)	1.37 (34.9)
1 1/4	32	-JUT-AN20	2.06 (52.3)	1.08 (27.5)	1.69 (42.9)
1 1/2	38	-JUT-AN24	2.33 (59.2)	1.30 (33.0)	2.00 (50.8)
2	50	-JUT-AN32	3.06 (77.7)	1.77 (45.0)	2.50 (63.5)

Union Run Tee

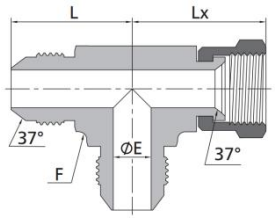

T-Tube O.D		Basic Ordering Number	Dimension, in. (mm)			
In.	mm		L	E	F (Flat)	Lx
1/8	3	-URT-AN2-AS2- AN2	0.77(19.6)	0.06(1.6)	0.44(11.1)	0.97(24.6)
3/16	4	-URT-AN3-AS3-AN3	0.83(21.1)	0.13 (3.2)	0.44(11.1)	1.00(25.4)
1/4	6	-URT-AN4-AS4-AN4	0.89(22.6)	0.17 (4.4)	0.50(12.7)	1.00(25.4)
5/16	8	-URT-AN5-AS5-AN5	0.95(24.1)	0.24 (6.0)	0.56(14.3)	1.06(26.9)
3/8	10	-URT-AN6-AS6-AN6	1.06(26.9)	0.30 (7.5)	0.56(14.3)	1.25(31.8)
1/2	12	-URT-AN8-AS8-AN8	1.25(31.8)	0.39(9.9)	0.81(20.6)	1.38(35.1)
5/8	16	-URT-AN10-AS10-AN10	1.45(36.8)	0.48(12.3)	0.81(20.6)	1.62(41.1)
3/4	18	-URT-AN12-AS12-AN12	1.66(42.2)	0.61(15.5)	1.06(27.0)	1.75(44.4)
7/8	22	-URT-AN14-AS14-AN14	1.80(45.7)	0.72(18.3)	1.25(31.8)	1.78(45.2)
1	25	-URT-AN16-AS16-AN16	1.81(46.0)	0.85(21.5)	1.37(34.9)	2.00(50.8)
1 1/4	32	-URT-AN20-AS20-AN20	2.06(52.3)	1.08(27.5)	1.69(42.9)	2.31(58.7)
1 1/2	38	-URT-AN24-AS24-AN24	2.33(59.2)	1.30(33.0)	2.00(50.8)	2.59(65.8)
2	50	-URT-AN32-AS32-AN32	3.06(77.7)	1.77(45.0)	2.50(63.5)	3.38(85.9)

Union Brunch Tee

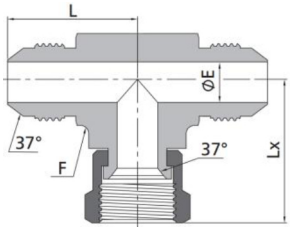

T-Tube O.D		Basic Ordering Number	Dimension, in. (mm)			
In.	mm		L	E	F (Flat)	Lx
1/8	3	-UBT-AN2-AN2- AS2	0.77(19.6)	0.06(1.6)	0.44(11.1)	0.97(24.6)
3/16	4	-UBT-AN3-AN3-AS3	0.83(21.1)	0.13 (3.2)	0.44(11.1)	1.00(25.4)
1/4	6	-UBT-AN4-AN4-AS4	0.89(22.6)	0.17 (4.4)	0.50(12.7)	1.00(25.4)
5/16	8	-UBT-AN5-AN5-AS5	0.95(24.1)	0.24 (6.0)	0.56(14.3)	1.06(26.9)
3/8	10	-UBT-AN6-AN6-AS6	1.06(26.9)	0.30 (7.5)	0.56(14.3)	1.25(31.8)
1/2	12	-UBT-AN8-AN8-AS8	1.25(31.8)	0.39(9.9)	0.81(20.6)	1.38(35.1)
5/8	16	-UBT-AN10-AN10-AS10	1.45(36.8)	0.48(12.3)	0.81(20.6)	1.62(41.1)
3/4	18	-UBT-AN12-AN12-AS12	1.66(42.2)	0.61(15.5)	1.06(27.0)	1.75(44.4)
7/8	22	-UBT-AN14-AN14-AS14	1.80(45.7)	0.72(18.3)	1.25(31.8)	1.78(45.2)
1	25	-UBT-AN16-AN16-AS16	1.81(46.0)	0.85(21.5)	1.37(34.9)	2.00(50.8)
1 1/4	32	-UBT-AN20-AN20-AS20	2.06(52.3)	1.08(27.5)	1.69(42.9)	2.31(58.7)
1 1/2	38	-UBT-AN24-AN24-AS24	2.33(59.2)	1.30(33.0)	2.00(50.8)	2.59(65.8)
2	50	-UBT-AN32-AN32-AS32	3.06(77.7)	1.77(45.0)	2.50(63.5)	3.38(85.9)

Union Crosses

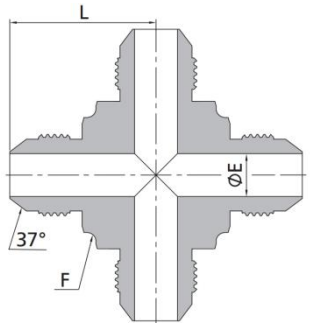

Tube O.D.		Basic Ordering Number	Dimensions, in. (mm)		
in.	mm		L	E	F (Flat)
1/8	3	-JUC-AN2	0.77(19.6)	0.06(1.6)	0.44(11.1)
3/16	4	-JUC-AN3	0.83(21.1)	0.13 (3.2)	0.44 (11.1)
1/4	6	-JUC-AN4	0.89 (22.6)	0.17 (4.4)	0.50 (12.7)
5/16	8	-JUC-AN5	0.95 (24.1)	0.24 (6.0)	0.56 (14.3)
3/8	10	-JUC-AN6	1.06 (26.9)	0.30 (7.5)	0.56 (14.3)
1/2	12	-JUC-AN8	1.25 (31.8)	0.39 (9.9)	0.81 (20.6)
5/8	16	-JUC-AN10	1.45 (36.8)	0.48 (12.3)	0.81 (20.6)
3/4	18	-JUC-AN12	1.66 (42.2)	0.61 (15.5)	1.06 (27.0)
7/8	22	-JUC-AN14	1.80 (45.7)	0.72 (18.3)	1.25 (31.8)
1	25	-JUC-AN16	1.81 (46.0)	0.85 (21.5)	1.37 (34.9)
1 1/4	32	-JUC-AN20	2.06 (52.3)	1.08 (27.5)	1.69 (42.9)
1 1/2	38	-JUC-AN24	2.33 (59.2)	1.30 (33.0)	2.00 (50.8)
2	50	-JUC-AN32	3.06 (77.7)	1.77 (45.0)	2.50 (63.5)

Tube Caps

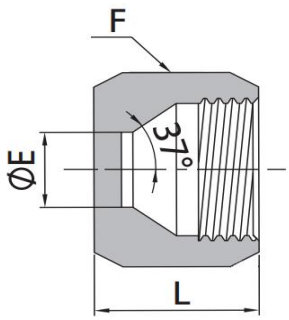

Tube O.D.		Basic Ordering Number	Dimensions, in. (mm)		
in.	mm		L	E	F (Hex)
1/8	3	-JTC-AN2	0.50 (12.7)	0.06 (1.6)	0.37 (9.5)
3/16	4	-JTC-AN3	0.56 (14.3)	0.13 (3.2)	0.44 (11.1)
1/4	6	-JTC-AN4	0.59 (15.1)	0.17 (4.4)	0.56 (14.3)
5/16	8	-JTC-AN5	0.61 (15.5)	0.24 (6.0)	0.63 (15.9)
3/8	10	-JTC-AN6	0.63 (15.9)	0.30 (7.5)	0.69 (17.5)
1/2	12	-JTC-AN8	0.75 (19.1)	0.39 (9.9)	0.87 (22.2)
5/8	16	-JTC-AN10	0.84 (21.4)	0.48 (12.3)	1.00 (25.4)
3/4	18	-JTC-AN12	0.91 (23.0)	0.61 (15.5)	1.25 (31.8)
7/8	22	-JTC-AN14	0.97 (24.6)	0.72 (18.3)	1.37 (34.9)
1	25	-JTC-AN16	1.02 (25.8)	0.85 (21.5)	1.50 (38.1)
1 1/4	32	-JTC-AN20	1.06 (27.0)	1.08 (27.5)	2.00 (50.8)
1 1/2	38	-JTC-AN24	1.19 (30.2)	1.30 (33.0)	2.25 (57.2)
2	50	-JTC-AN32	1.44 (36.5)	1.77 (45.0)	2.87 (73.0)

Tube Plugs

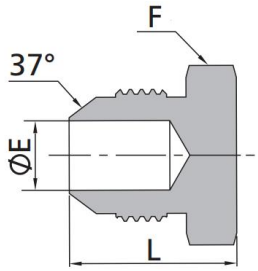

Tube O.D.		Basic Ordering Number	Dimensions, in. (mm)		
in.	mm		L	E	F (Hex)
1/8	3	-JTP-AN2	0.50 (12.7)	0.06 (1.6)	0.37 (9.5)
3/16	4	-JTP-AN3	0.56 (14.3)	0.13 (3.2)	0.44 (11.1)
1/4	6	-JTP-AN4	0.59 (15.1)	0.17 (4.4)	0.56 (14.3)
5/16	8	-JTP-AN5	0.61 (15.5)	0.24 (6.0)	0.63 (15.9)
3/8	10	-JTP-AN6	0.63 (15.9)	0.30 (7.5)	0.69 (17.5)
1/2	12	-JTP-AN8	0.75 (19.1)	0.39 (9.9)	0.87 (22.2)
5/8	16	-JTP-AN10	0.84 (21.4)	0.48 (12.3)	1.00 (25.4)
3/4	18	-JTP-AN12	0.91 (23.0)	0.61 (15.5)	1.25 (31.8)
7/8	22	-JTP-AN14	0.97 (24.6)	0.72 (18.3)	1.37 (34.9)
1	25	-JTP-AN16	1.02 (25.8)	0.85 (21.5)	1.50 (38.1)
1 1/4	32	-JTP-AN20	1.06 (27.0)	1.08 (27.5)	2.00 (50.8)
1 1/2	38	-JTP-AN24	1.19 (30.2)	1.30 (33.0)	2.25 (57.2)
2	50	-JTP-AN32	1.44 (36.5)	1.77 (45.0)	2.87 (73.0)

Tube cap assembly

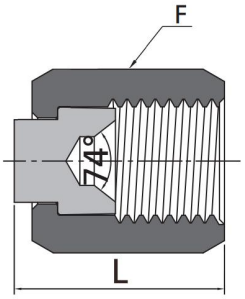

T-Tube O.D		Basic Ordering Number	Dimension, in. (mm)	
In.	mm		L	G
1/8	3	-TCA-AN2	0.6(15.3)	0.37(9.5)
3/16	4	-TCA-AN3	0.66(16.8)	0.44(11.1)
1/4	6	-TCA-AN4	0.67(17.1)	0.56(14.3)
5/16	8	-TCA-AN5	0.77(19.5)	0.63(15.9)
3/8	10	-TCA-AN6	0.81(20.5)	0.69(17.5)
1/2	12	-TCA-AN8	0.94(23.9)	0.87(22.2)
5/8	16	-TCA-AN10	1.07(27.1)	1.00(25.4)
3/4	18	-TCA-AN12	1.24(31.6)	1.25(31.8)
7/8	22	-TCA-AN14	1.26(32.0)	1.37(34.9)
1	25	-TCA-AN16	1.29(32.8)	1.50(38.1
1 1/4	32	-TCA-AN20	1.39(35.4)	2.00(50.8)
1 1/2	38	-TCA-AN24	1.70(43.2)	2.00(57.2)
2	50	-TCA-AN32	2.07(52.6)	2.87(73.0)

Forged Fittings

Socket-Welding Type

Threaded Type

Outlet

Technical Data

Socket Welding Fittings

90° Elbow

45° Elbow

Tee

Cross

Coupling

Reducer

Cap

Union

Threaded Fittings

90° Elbow

45° Elbow

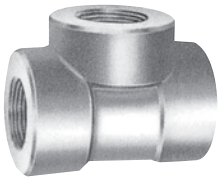

Tee

Cross

Full Coupling

Half Coupling

Cap

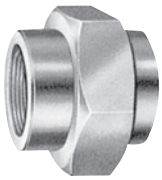

Union

Threaded Fittings

Hex Head Plug

S.Q Head Plug

Round Head Plug

Hex Head Bushing

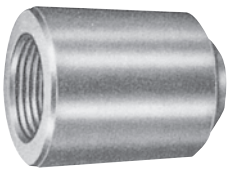

Boss

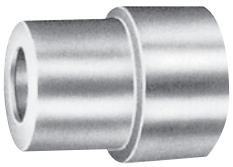

Insert

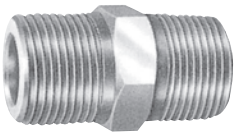

Nipple

Swage Nipple

Outlet Fittings

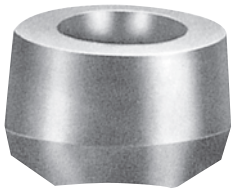

Socket-Outlet

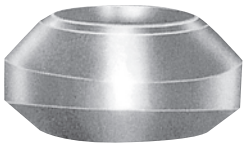

Wedling-Outlet

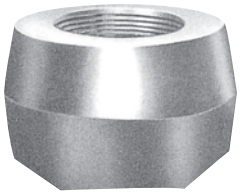

Thread-Outlet

Nipple-Outlet

Manufacturing Process

Raw Material

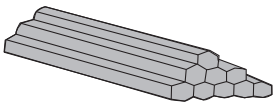

- Raw Material Check
- Quantity Check
- Visual & Dimension Check

Material Analyzing

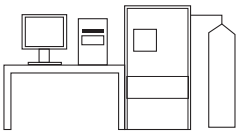

- Chemical Analysis Check
- Preservation of Analysis Certificate

Material Analyzing

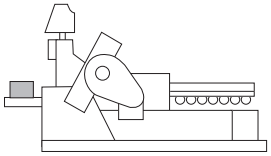

- Chemical Analysis Check
- Preservation of Analysis Certificate

Forging

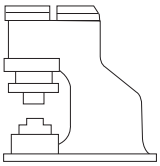

- Material Grade Check
- Weight Measuring
- Temperature Control
- Mechanical Test

Machining

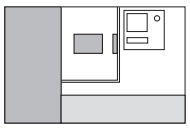

- Material Grade Check
- Weight Measuring
- Temperature Control
- Dimension Check

Inspection

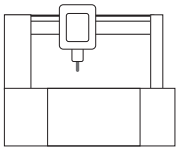

- Dimension Test
- Visual Test
- Non Destructive Test

Marking

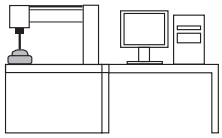

- Description Marking
- Size Marking
- Lot No. Marking

Undercoating

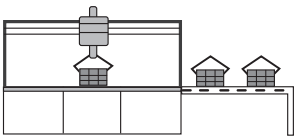

- Preserve Check
- Tectyl 506 or etc. Coating

Packing > Shipping

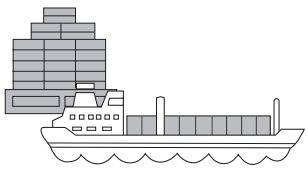

- Packing Spec. Check
- Packing Inspection
- Dispatching Shipping Documents
- check Cert. of origin

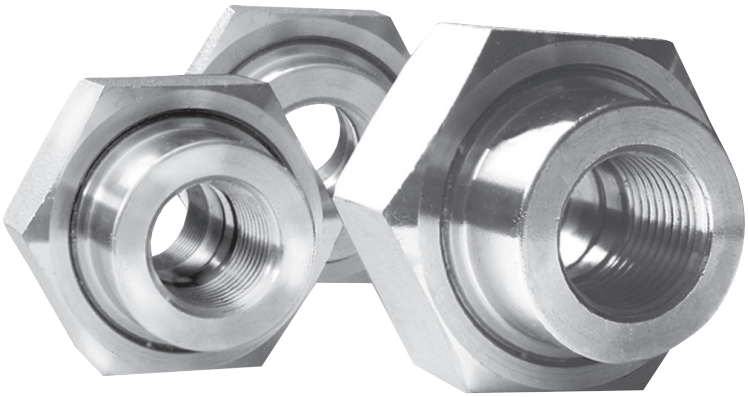

FORGED FITTINGS

- SOCKET - WELDING
- THREADED FITTING
- OUTLET
- TECHNICAL DATA

SOCKET WELDING & THREADED FITTINGS

1. Pressure Ratings

These fittings shall be disignated as pressure class 2000, 3000 and 6000 fittings for threading and pressure class 3000, 6000 and 9000 for socket-welding. This designation identifies the fittings with their ratings as shown as follows,Table 1.

Table 1 : Correlation of Fittings Class With Schedule Number of Wall Designation of Pipe for Calculation of Ratings.

Pressure Class Designaion of Fitting	Type of Fitting	Pipe Used for Rating Basic	
		Schedule No.	Well Designation
2000 lb	Threaded	80	X-S
3000 lb	Threaded	160	-
6000 lb	Threaded	-	XX-S
3000 lb	Socket-Welding	80	X-S
6000 lb	Socket-Welding	160	-
9000 lb	Socket-Welding	-	XX-S

∗ This table is not intended to restrict the use of pipe of thinner or thicker wall with fittings. Pipe actually used may be thinner or thicker in nominal wall than that shown in Table 1. When thinner pipe is used its strength may govern the rating. When thicker pipe is used (e.g., for mechanical strength), the strength of the fitting governs the rating.

Table 2 : Nominal wall thickness of Schedule 160 and Double Extra Strong Pipe

NPS.	Schedule 160		XX-S	
	in	mm	in	mm
1/8	0.124	3.15	0.190	4.83
1/4	0.145	3.68	0.230	6.05
3/8	0.158	4.01	0.252	6.40

SOCKET WELDING & THREADED FITTINGS

Table 3 : Pressure/Temperaturs Ratings Non-shock Work ng Pressure in Pounds per Square Inch

Service Tempera-ture Degree F	2000lb Threaded Fittings					3000lb Sock t Welding and Threaded Fittings					6000lb Sock t Welding and Threaded Fittings				
	Carbon Steel	F304	F316	F22	F5	Carbon Steel	F304	F316	F22	F5	Carbon Steel	F304	F316	F22	F5
100	2000	1715	2000	2000	2000	3000	2570	3000	3000	3000	6000	5145	6000	6000	6000
150	1970	1615	1970	1970	1970	2950	2425	2950	2950	2950	5915	4855	5915	5915	5915
200	1940	1520	1940	1940	1940	2915	2280	2915	2915	2915	5830	4565	5830	5830	5830
250	1915	1445	1915	1915	1915	2875	2170	2975	2975	2975	5750	4340	5750	5750	5750
300	1975	1370	1896	1895	1895	2845	2055	2845	2845	2845	5690	4115	5690	5690	5690
350	1875	1310	1875	1875	1875	2810	1965	2810	2810	2810	5625	3930	5690	5625	5625
400	1850	1245	1850	1850	1850	2775	1870	2775	2775	2775	5550	3745	5550	5550	5550
450	1810	1195	1810	1710	1810	2715	1790	2715	2715	2715	5430	3585	5430	5430	5430
500	1735	1140	1735	1635	1735	2605	1715	2605	2605	2605	5210	3430	5210	5210	5210
550	1640	1100	1640	1540	1640	2460	1650	2460	2460	2460	4925	3305	4925	4925	4925
600	1540	1060	1540	1440	1540	2310	1590	2310	2310	2310	4620	3180	4620	4620	4620
650	1430	1020	1430	1330	1430	2150	1535	2150	2150	2150	4300	3070	4300	4300	4300
700	1305	985	1370	1240	1340	1960	1480	2055	2010	2010	3920	2960	4110	4025	4025
750	1180	950	1305	1145	1245	1775	1425	1960	1870	1870	3550	2850	3920	3745	3745
800	1015	915	1240	1055	1155	1525	1370	1865	1735	1735	3050	2745	3730	3470	3470
850	830	880	1180	1060	1060	1250	1330	1770	1595	1595	2500	2660	3540	3190	3190
900	615	860	1115	970	970	925	1290	1675	1455	1455	1885	2580	3350	2915	2915
950	425	845	1055	880	880	640	1270	1580	1320	1320	1295	2540	3165	2640	2640
1000	235	830	990	740	695	350	1250	1485	1115	1240	715	2500	2975	2230	2085

2. Size Identification

The siz of a fitting is identified by the nominal pipe siz .
For reducing fittings, the siz of the largest run opening is to be giv n first, followed by the siz of the opening opposite of the same run. The branch siz of a Tee is giv n last. Where the case is a Cross, the largest side-outlet is thirdly giv n, then the opening opposite.

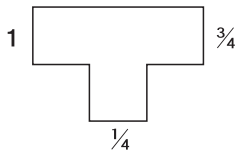

Tee
1 × ¾ × ¼

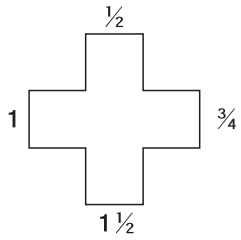

Cross
1 ½ × ½ × 1 × ¾

3. Threads

Unless otherwise specified in inquiry, all threaded fittings are supplied with NPT threads (ASME B1.20.1 American Standard Tapesr Pipe Thread) for reference, other av ilble threads are:

- ISO/R7, Pipe Threads for Gas List Tubes and Screwed Fittings where Pressure-tight Joints are made on the threads (BS 2.1 & JIS B0203PT Thread)
- API 5B, Line Pipe Threads.
- KSB0222 Taper Pipe Threads

SOCKET WELDING FITTINGS

3000lb, 6000lb, 9000lb

90° Elbow

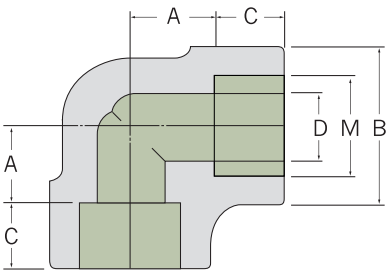

Size	M	B	D	A	C	Unit Weight (Kg)
3000 lb						
¼	See Note (1) To be specified by purchaser	23.0	9.4	11.0	10	0.132
⅜		26.5	12.7	13.5	12	0.113
½		34.0	16.1	15.5	13	0.226
¾		38.5	21.4	19.0	14	0.312
1		46.5	27.2	22.5	16	0.596
1¼		56.5	35.5	27.0	18	0.709
1½		63.5	41.2	32.0	19	0.850
2		76.0	52.7	38.0	22	1.474
2½		92.0	65.9	41.0	26	2.460
3		110.0	78.1	57.0	29	4.650
4		146.0	102.3	66.5	33	9.410
6000 lb						
½	See Note (1)	38.5	12.3	19.0	14	0.425
¾		46.5	16.2	22.5	16	0.652
1		56.5	21.2	27.0	18	1.020
1¼		63.5	29.9	32.0	19	1.446
1½		76.0	34.4	38.0	22	2.380
2		84.0	43.1	41.0	26	3.760
2½		110.0	57.3	57.0	29	6.120
3		121.0	66.9	66.5	33	8.760
4		152.0	87.3	70.0	45	14.300
9000 lb						
½	See Note (1)	46.5	6.7	25.5	16	0.510
¾		56.5	11.6	28.5	18	0.782
1		63.5	15.8	32.0	19	1.224
1¼		76.0	23.3	35.0	22	1.807
1½		84.0	28.2	38.0	26	2.975
2		110.0	38.3	54.0	29	4.700
2½		121.0	48.3	66.0	33	10.512
3		146.0	58.7	70.0	36	13.020

45° Elbow

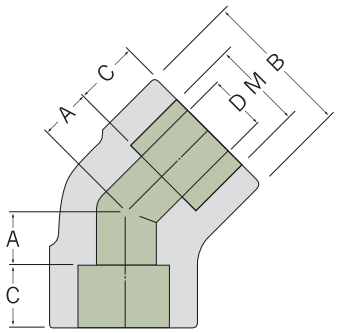

Size	M	B	D	A	C	Unit Weight (Kg)
3000 lb						
¼	See Note (1) To be specified by purchaser	23.0	9.4	8	10	0.093
⅜		26.5	12.7	8	11	0.142
½		34.0	16.1	11	13	0.264
¾		38.5	21.4	13.0	14	0.397
1		46.5	27.2	14.0	16	0.624
1¼		56.5	35.5	17.5	18	0.907
1½		63.5	41.2	20.5	19	0.782
2		76.0	52.7	25.5	21	1.265
2½		92.0	65.9	28.5	27	3.062
3		110.0	78.1	32.0	31	4.763
4		146.0	102.3	41.0	35	8.250
6000 lb						
½	See Note (1)	38.5	12.3	12.5	14	0.397
¾		46.5	16.2	14	16	0.595
1		56.5	21.2	17.5	18	0.935
1¼		63.5	29.9	20.5	19	1.157
1½		76.0	34.4	25.5	21	1.982
2		84.0	43.1	28.5	27	4.000
2½		110.0	57.3	32.0	31	5.875
3		121.0	66.4	41.0	35	6.509
4		152.0	87.3	54.0	45	12.360
9000 lb						
½	See Note (1)	46.5	6.7	15.5	16	0.875
¾		56.5	11.6	19	18	1.369
1		63.5	15.8	20.5	19	1.725
1¼		76.0	23.3	22.5	21	2.931
1½		84.0	28.2	25.5	27	5.062
2		110.0	38.3	28.5	31	6.400
2½		121.0	48.3	32	35	7.925
3		146.0	58.7	41	35	11.569

- Notes
  (1) For the 'Bore'(M) other them standard pipe outside diameter.
- Dimensions are in millimeters.
- Dimensional Tolerances See ASME B16.11 or JIS B2316

SOCKET WELDING FITTINGS

Tee

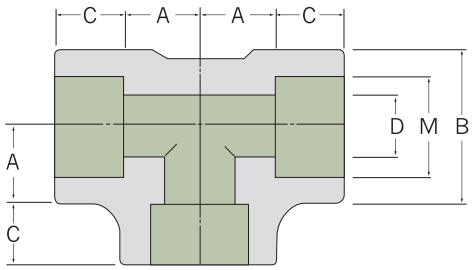

Size	M	B	D	A	C	Unit Weight (Kg)
3000 lb						
¼	See Note (1) To be specified by purchaser	23.0	9.4	11.0	10	0.161
⅜		26.5	12.7	13.5	12	0.142
½		34.0	16.1	15.5	13	0.170
¾		38.5	21.4	19.0	14	0.397
1		46.5	27.2	22.5	16	0.624
1¼		56.5	35.5	27.0	18	0.907
1½		63.5	41.2	32.0	19	1.134
2		76.0	52.7	38.0	22	1.701
2½		92.0	65.9	41.0	26	3.424
3		110.0	78.1	57.0	29	5.670
4		146.0	102.3	66.5	33	12.247
6000 lb						
½	See Note (1)	38.5	12.3	19.0	14	0.623
¾		46.5	16.2	22.5	16	0.907
1		56.5	21.2	27.0	18	1.503
1¼		63.5	29.9	32.0	19	1.701
1½		76.0	34.4	38.0	22	2.948
2		84.0	43.1	41.0	26	3.702
2½		110.0	57.3	57.0	29	8.723
3		121.0	66.9	66.5	33	10.660
4		152.0	87.3	70.0	45	19.020
9000 lb						
½	See Note (1)	46.5	6.7	25.5	16	0.779
¾		56.5	11.6	28.5	18	1.333
1		63.5	15.8	32.0	19	1.879
1¼		76.0	23.3	35.0	22	2.126
1½		84.0	28.2	38.0	26	3.685
2		110.0	38.3	54.0	29	4.627
2½		121.0	48.3	66.0	33	10.903
3		146.0	58.7	70.0	36	13.325

Cross

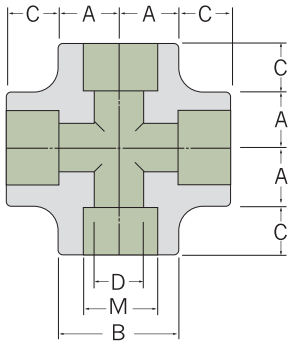

						Unit Weight (Kg)
3000 lb						
¼	See Note (1) To be specified by purchaser	23.0	9.4	11.0	10	0.182
⅜		26.5	12.7	13.4	12	0.170
½		34.0	16.1	16.0	13	0.368
¾		38.5	21.4	20.0	14	0.519
1		46.5	27.2	23.0	16	0.680
1¼		56.5	35.5	28.0	18	1.020
1½		63.5	41.2	33.0	19	1.389
2		76.0	52.7	40.0	22	2.326
2½		92.0	65.9	42.0	26	7.484
3		110.0	78.1	57.1	29	10.432
4		146.0	102.3	70.0	33	18.144
6000 lb						
½	See Note (1)	38.5	12.3	20.2	14	0.660
¾		46.5	16.2	23.0	16	1.120
1		56.5	21.2	28.0	18	1.730
1¼		63.5	29.9	33.0	19	2.381
1½		76.0	34.4	40.0	22	3.750
2		84.0	43.1	42.0	26	7.860
2½		110.0	57.3	57.1	29	10.600
3		121.0	66.9	66.0	33	13.600
4		152.0	87.3	70.0	45	26.000
9000 lb						
½	See Note (1)	46.5	6.7	25.5	16	1.615
¾		56.5	11.6	28.5	18	2.113
1		63.5	15.8	32.0	19	3.896
1¼		76.0	23.3	35.0	22	6.298
1½		84.0	28.2	38.0	26	9.280
2		110.0	38.3	54.0	29	18.741
2½		121.0	48.3	66.0	33	25.702
3		146.0	58.7	70.0	36	33.761

- Notes
  (1) For the 'Bore'(M) other them standard pipe outside diameter.
- Dimensions are in millimeters.
- Dimensional Tolerances See ASME B16.11 or JIS B2316

SOCKET WELDING FITTINGS

3000lb, 6000lb, 9000lb

Full Coupling

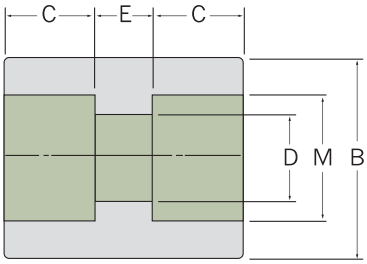

Size	M	B	D	C	E	Unit Weight (Kg)
3000 lb						
¼	See Note (1) To be specified by purchaser	22.0	9.4	10	6.4	0.05
⅜		26.0	12.7	10	6.4	0.12
½		32.0	16.1	10	9.6	0.12
¾		38.0	21.4	13	9.6	0.18
1		46.0	27.2	13	12.7	0.26
1¼		55.0	35.5	13	12.7	0.35
1½		63.0	41.2	13	12.7	0.47
2		75.0	52.7	16	19.1	0.81
2½		95.0	65.9	16	19.1	1.25
3		110.0	78.1	16	19.1	1.53
4		140.0	102.3	19	19.1	2.91
6000 lb						
½	See Note (1)	35.0	12.3	10	9.6	0.170
¾		42.0	16.2	13	9.6	0.249
1		50.0	21.2	13	12.7	0.420
1¼		60.0	29.9	13	12.7	0.525
1½		68.0	34.4	13	12.7	0.665
2		85.0	43.1	16	19.1	1.240
2½		100.0	57.3	16	19.1	1.640
3		114.3	66.9	16	19.1	2.746
4		160.0	87.3	19	19.1	4.679
9000 lb						
½	See Note (1)	42.0	6.7	10	9.6	0.270
¾		48.0	11.6	13	9.6	0.327
1		60.0	15.8	13	12.7	0.518
1¼		70.0	23.3	13	12.7	0.813
1½		75.0	28.2	13	12.7	0.940
2		90.0	38.3	16	19.1	1.553
2½		110.0	48.3	16	19.1	2.430
3		130.0	58.7	16	19.1	3.721
4		160.0	80.1	19	19.1	5.137

Half Coupling

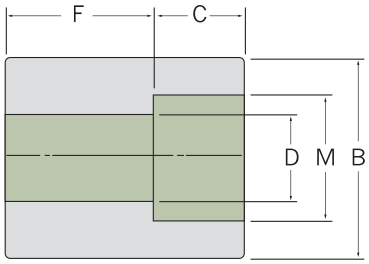

Size	M	B	D	C	F	Unit Weight (Kg)
3000 lb						
¼	See Note (1) To be specified by purchaser	22.0	9.4	10	15.7	0.058
⅜		26.0	12.7	10	17.5	0.073
½		32.0	16.1	10	22.4	0.138
¾		38.0	21.4	13	23.9	0.203
1		46.0	27.2	13	28.4	0.313
1¼		55.0	35.5	13	30.2	0.431
1½		63.0	41.2	13	31.8	0.593
2		75.0	52.7	16	41.1	1.280
2½		95.0	65.9	16	42.9	1.490
3		110.0	78.1	16	44.5	2.202
4		140.0	102.0	19	47.7	4.250
6000 lb						
½	See Note (1)	35.0	12.3	10	22.4	0.193
¾		42.0	16.2	13	23.9	0.284
1		50.0	21.2	13	28.4	0.488
1¼		60.0	29.9	13	30.2	0.583
1½		68.0	34.4	13	31.8	0.640
2		85.0	43.1	16	41.1	1.726
2½		100.0	57.3	16	42.9	2.247
3		114.3	66.9	16	44.5	3.412
4		160.0	87.3	19	47.7	5.730
9000 lb						
½	See Note (1)	42.0	6.7	10	22.4	0.312
¾		48.0	11.6	13	23.9	0.389
1		60.0	15.8	13	28.4	0.641
1¼		70.0	23.3	13	30.2	0.980
1½		75.0	28.2	13	31.8	1.179
2		90.0	38.3	16	41.1	1.994
2½		110.0	48.3	16	42.9	3.210
3		130.0	58.7	16	44.5	4.597
4		160.0	80.1	19	47.7	7.610

- Notes
  (1) For the 'Bore'(M) other them standard pipe outside diameter.
- Dimensions are in millimeters.
- Dimensional Tolerances See ASME B16.11 or JIS B2316

SOCKET WELDING FITTINGS

3000lb, 6000lb, 9000lb

Cap

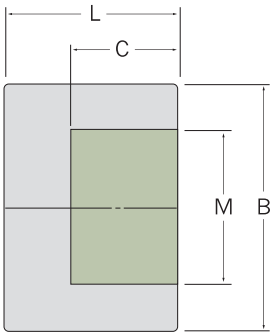

Size	M	B	C	L	Unit Weight (Kg)
3000 lb					
¼	See Note (1) To be specified by purchaser	22.0	10	20	0.048
⅜		26.0	10	20	0.076
½		32.0	10	20	0.100
¾		38.0	13	25	0.182
1		46.0	13	27	0.241
1¼		55.0	13	30	0.350
1½		63.0	13	30	0.612
2		75.0	16	36	0.880
2½		95.0	16	42	1.520
3		110.0	16	46	2.208
4		140.0	19	55	4.417
6000 lb					
½	See Note (1)	35.0	10	26	0.055
¾		42.0	13	27	0.223
1		50.0	13	30	0.382
1¼		60.0	13	35	0.511
1½		60.0	13	36	0.735
2		85.0	16	39	1.289
2½		100.0	16	45	2.056
3		114.3	16	52	3.364
9000 lb					
½	See Note (1)	42.0	10	30	0.262
¾		48.0	13	30	0.320
1		60.0	13	33	0.520
1¼		70.0	13	40	1.256
1½		75.0	13	40	1.440
2		90.0	16	43	1.686
2½		110.0	16	50	2.986
3		130.0	16	58	4.666

- Notes
  (1) For the 'Bore'(M) other them standard pipe outside diameter.
- Dimensions are in millimeters.
- Dimensional Tolerances See ASME B16.11 or JIS B2316

Boss

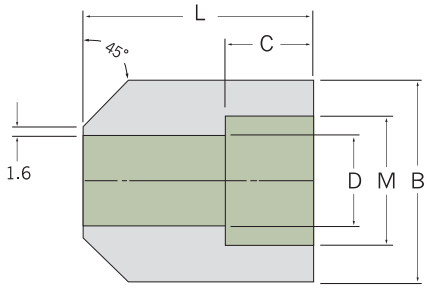

Size	M	B	D	C	L	Unit Weight (Kg)
3000 lb						
¼	See Note (1)	22.0	9.4	10	30	0.09
⅜		26.0	12.7	10	30	0.14
½		32.0	16.1	10	33	0.24
¾		38.0	21.4	13	35	0.28
1		46.0	27.2	13	43	0.41
1¼		55.0	35.5	13	46	0.44
1½		65.0	41.2	13	50	0.63
2		75.0	52.7	16	57	1.09
6000 lb						
½	See Note (1)	35.0	12.3	10	33	0.45
¾		42.0	16.2	13	35	0.52
1		55.0	21.2	13	43	0.73
1¼		60.0	29.9	13	46	0.77
1½		70.0	34.4	13	50	0.12
2		85.0	43.1	16	57	1.82

SOCKET WELDING FITTINGS

3000lb, 6000lb

R.J Union

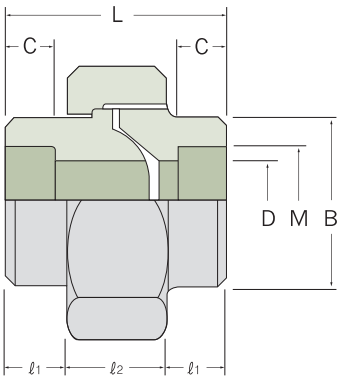

Size	M	B	ℓ1	ℓ2	L	C	D	H	Unit Weight (Kg)
3000 lb									
¼	See Note (1) To be specified by purchaser	21.0	11.5	18	41	10.0	9.4	35HEX	0.187
⅜		25.0	14.0	18	46	10.0	12.7	40HEX	0.245
½		32.0	15.0	21	51	10.0	16.1	46HEX	0.430
¾		40.0	17.0	23	57	13.0	21.2	58HEX	0.620
1		48.0	19.5	25	64	13.0	27.0	65HEX	1.030
1¼		55.0	22.5	27	72	13.0	35.4	760CT	1.150
1½		63.5	24.0	30	78	13.0	41.2	830CT	1.530
2		76.0	26.0	36	88	16.0	52.7	1030CT	3.050
2½		95.0	34.0	42	110	18.0	62.7	1240CT	5.140
3		116.0	37.5	45	120	22.5	78.0	1420CT	7.120
4		148.0	45.0	50	140	25.0	102.0	1760CT	12.400
6000 lb									
½	See Note (1)	40.0	17.0	23	57	13	12.0	56HEX	0.62
¾		44.5	19.5	25	64	13	15.8	65HEX	0.94
1		51.0	22.5	27	72	13	21.0	740CT	1.98
1¼		57.2	24.0	30	78	16	29.7	830CT	1.41
1½		71.5	26.0	36	88	16	34.2	1030CT	2.75
2		90.0	34.0	42	110	16	43.1	1240CT	5.05
2½		105.0	35.0	45	120	18	54.0	1500CT	6.87
3		125.0	45.0	50	140	22	67.7	1760CT	10.85

O-Ring Union

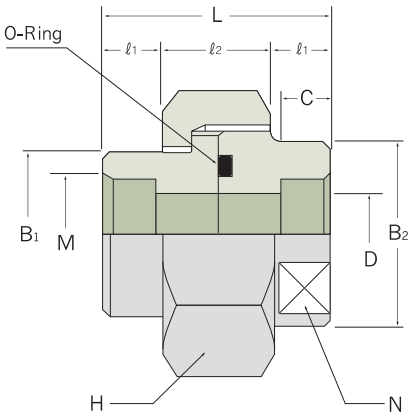

Size	M	B1	B2	D	C	ℓ1	ℓ2	L	N	H	O-Ring	Unit Weight (Kg)
3000 lb												
½	See Note (1)	22	24	10	10	10	18	38	21	35HEX	P18	0.160
¾		27	30	12	10	10	18	38	26	41HEX	P20	0.228
1		32	35	16	10	12	20	44	32	46HEX	G25	0.328
1¼		38	42	20	13	12	26	50	38	54HEX	G30	0.535
1½		47	52	25	13	15	26	56	46	63HEX	G35	0.786
2		56	60	32	13	15	30	60	54	77HEX	G45	1.104
2½		63	68	38	13	18	36	72	63	800CT	G50	1.542
3		76	82	48	17	18	36	72	77	950CT	G65	2.080

- Notes
  (1) For the 'Bore'(M) other them standard pipe outside diameter.
- Dimensions are in millimeters.
- Dimensional Tolerances See ASME B16.11 or JIS B2316

SOCKET WELDING FITTINGS

3000lb, 6000lb

Reducing Insert

Type 1

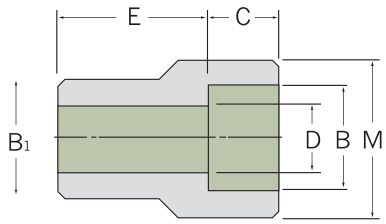

Type 2

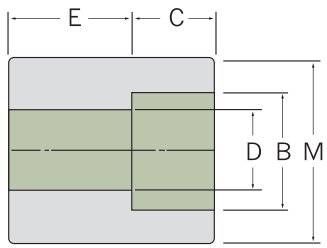

Type 3

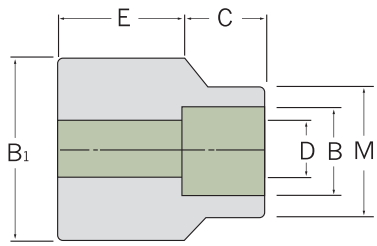

Application of Reducer Insert

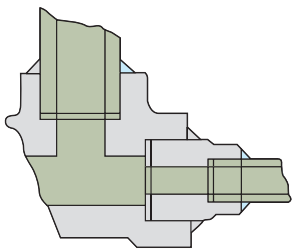

Size	Type	M	B_1	B	C(Min.)	E	L	D	Unit Weight (Kg)
3000 lb									
⅜ × ¼	1	22.2	See Note (1) To be specified by purchaser	See Note (1) To be specified by purchaser	9.6	21	16	9.4	0.051
½ × ¼	2	–			9.6	15	–	9.4	0.052
½ × ⅜	1	25.4			9.6	24	20	12.7	0.086
¾ × ¼	3	–			9.6	19	7	9.4	0.109
¾ × ⅜	2	–			9.6	19	–	12.7	0.697
¾ × ½	1	31.8			9.6	26	22	16.1	0.146
1 × ⅜	3	25.4			9.6	22	7	12.7	0.161
1 × ½	2	–			9.6	22	–	16.1	0.183
1 × ¾	1	38.1			12.7	29	23	21.4	0.208
1¼ × ½	3	31.8			9.6	24	7	16.1	0.273
1¼ × ¾	2	–			12.7	24	–	21.4	0.286
1¼ × 1	1	46.0			12.7	32	24.5	27.2	0.436
1½ × ¾	3	38.1			12.7	26	8	21.4	0.348
1½ × 1	2	–			12.7	26	–	27.2	0.384
1½ × 1¼	1	55.0			12.7	35	27	35.5	0.463
2 × 1	3	46.0			12.7	29	8	27.2	0.615
2 × 1¼	2	–			12.7	29	–	35.5	0.647
2 × 1½	1	65.0			12.7	37	29	41.2	0.661
2½ × 1¼	3	55.0			12.7	35	8	35.5	1.183
2½ × 1¼	3	65.0			12.7	35	8	41.2	1.107
2½ × 2	1	76.0			15.9	39	30	52.7	1.200
3 × 1½	3	65.0			12.7	39	8	41.2	1.715
3 × 2	3	75.0			15.9	39	10	52.7	1.542
3 × 2½	1	95.0			15.9	51	33.5	65.9	1.825
6000 lb									
¾ × ½	1	38.1	See Note (1)	See Note (1)	12.3	39	23	12.3	0.316
1 × ½	1	38.1			12.3	38	24	12.3	0.354
× ¾	1	46.0			16.2	43	26	16.2	0.526
1¼ × ½	2	–			12.3	29	–	12.3	0.415
1¼ × ¾	1	46.0			16.2	40	28	16.2	0.557
1¼ × 1	1	55.0			21.2	45	28	21.2	0.765
1½ × ¾	2	–			16.2	35	–	16.2	0.619
1½ × 1	1	55.0			21.2	38	28	21.2	0.723
1½ × 1¼	1	62.0			29.9	52	32	29.9	0.957
2 × 1	3	–			21.2	43	8	21.2	1.026
2 × 1¼	1	62.0			29.9	54	34	29.9	1.137
2 × 1½	1	75.0			34.4	63	34	34.4	0.911
2½ × 1¼	3	62.0			29.9	46	8	29.9	1.478
2½ × 1½	2	–			34.4	46	–	34.4	1.881
2½ × 2	1	95.0			43.1	73	36	43.1	2.918
3 × 1½	3	75.0			34.4	50	8	34.4	2.370
3 × 2	2	95.0			43.1	70	–	43.1	3.313
3 × 2½	1	110.0			57.3	83	38	57.3	3.562

- Notes
  (1) For the 'Bore'(M) other them standard pipe outside diameter.
- Dimensions are in millimeters.
- Dimensional Tolerances See ASME B16.11 or JIS B2316

THREADED FITTINGS

2000lb, 3000lb, 6000lb

90° Elbow

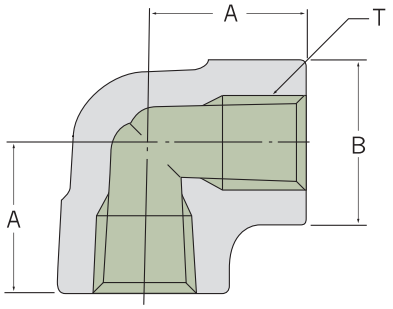

Size T	B	A	Unit Weight (Kg)
2000 lb			
¼	23.0	21	0.13
⅜	26.5	25	0.12
½	34.0	28	0.23
¾	38.5	33	0.36
1	46.5	38	0.55
1¼	56.5	44	0.95
1½	63.5	51	1.12
2	76.0	60	1.96
2½	92.0	76	3.25
3	110.0	86	5.64
3½	121.0	95	6.92
4	146.0	106	10.43
3000 lb			
¼	26.5	25	0.120
⅜	34.0	28	0.235
½	38.5	33	0.390
¾	46.5	38	0.570
1	56.5	44	0.990
1¼	63.5	51	1.260
1½	76.0	60	2.125
2	84.0	64	3.520
2½	110.0	83	5.460
3	121.0	95	8.000
3½	146.0	106	11.230
4	152.0	114	13.500
6000 lb			
⅜	38.5	33	0.40
½	46.5	38	0.68
¾	56.5	44	1.13
1	63.5	51	1.59
1¼	76.0	60	2.60
1½	84.0	64	4.32
2	110.0	83	7.33
2½	121.0	95	9.25
3	146.0	106	12.05
3½	152.0	114	14.30
4	152.0	114	14.10

- Dimensions are in millimeters.
- Dimensional Tolerances See ASME B16.11 or JIS B2316

45° Elbow

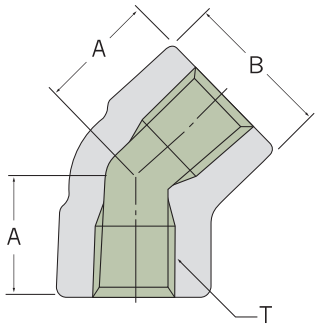

Size T	B	A	Unit Weight (Kg)
2000 lb			
¼	23.0	18	0.16
⅜	26.5	19	0.13
½	34.0	22	0.25
¾	38.5	25	0.32
1	46.5	28	0.43
1¼	56.5	33	0.75
1½	63.5	35	1.06
2	76.0	43	1.49
2½	92.0	52	2.45
3	110.0	64	4.00
3½	121.0	64	5.12
4	146.0	79	8.68
3000 lb			
¼	26.5	19	0.16
⅜	34.0	22	0.28
½	38.5	25	0.38
¾	46.5	28	0.51
1	56.5	33	1.03
1¼	63.5	35	1.22
1½	76.0	43	2.36
2	84.0	44	3.66
2½	110.0	52	6.12
3	121.0	64	6.12
3½	146.0	79	8.40
4	152.0	79	11.30
6000 lb			
⅜	38.5	25	0.45
½	46.5	28	0.72
¾	56.5	33	1.00
1	63.5	35	1.56
1¼	76.0	43	2.29
1½	84.0	44	3.80
2	110.0	52	5.76
2½	121.0	64	7.20
3	146.0	79	11.30
3½	152.0	79	13.20
4	152.0	79	11.80

THREADED FITTINGS

2000lb, 3000lb, 6000lb

Tee

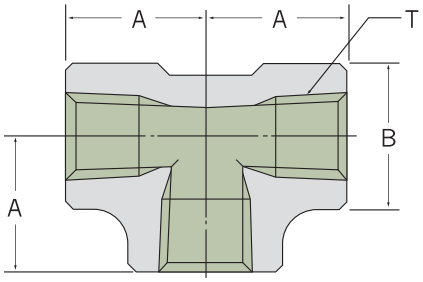

Size T	B	A	Unit Weight (Kg)
2000 lb			
¼	23.0	21	0.18
⅜	26.5	25	0.14
½	34.0	28	0.26
¾	38.5	33	0.43
1	46.5	38	0.65
1¼	56.5	44	0.91
1½	63.5	51	1.25
2	76.0	60	2.10
2½	92.0	76	3.94
3	110.0	86	5.98
3½	121.0	95	7.41
4	146.0	106	12.36
3000 lb			
¼	26.5	25	0.18
⅜	34.0	28	0.32
½	38.5	33	0.52
¾	46.5	38	0.73
1	56.5	44	1.26
1¼	63.5	51	1.65
1½	76.0	60	2.81
2	84.0	64	4.35
2½	110.0	83	6.26
3	121.0	95	10.05
3½	146.0	106	14.62
4	152.0	114	16.50
6000 lb			
⅜	38.5	33	0.59
½	46.5	38	0.96
¾	56.5	44	1.50
1	63.5	51	2.10
1¼	76.0	60	3.30
1½	84.0	64	5.72
2	110.0	83	9.64
2½	121.0	95	13.40
3	146.0	106	16.15
3½	152.0	114	18.23
4	152.0	114	16.70

Cross

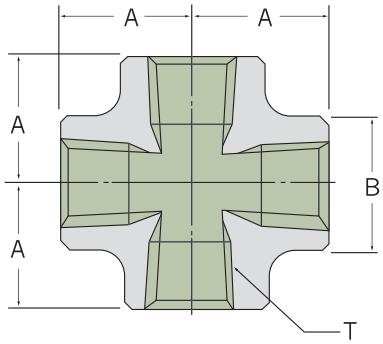

Size T	B	A	Unit Weight (Kg)
2000 lb			
¼	23.0	21	0.14
⅜	26.5	25	0.22
½	34.0	28	0.37
¾	38.5	33	0.52
1	46.5	38	0.79
1¼	56.5	44	1.28
1½	63.5	51	1.62
2	76.0	60	2.62
2½	92.0	76	4.66
3	110.0	86	7.10
3½	121.0	95	8.85
4	146.0	106	14.83
3000 lb			
¼	26.5	25	0.23
⅜	34.0	28	0.40
½	28.5	33	0.63
¾	46.5	38	0.93
1	56.5	44	1.47
1¼	63.5	51	1.78
1½	76.0	60	3.42
2	92.0	64	5.50
2½	110.0	83	7.66
3	121.0	95	11.21
3½	146.0	106	16.72
4	152.0	114	19.00
6000 lb			
⅜	38.5	33	0.67
½	46.5	38	1.12
¾	56.5	44	1.90
1	63.5	51	2.90
1¼	76.0	60	4.20
1½	92.0	64	6.65
2	110.0	83	10.00
2½	121.0	95	16.00
3	146.0	106	19.87
3½	152.0	114	28.10
4	152.0	114	24.60

- Dimensions are in millimeters.
- Dimensional Tolerances See ASME B16.11 or JIS B2316

THREADED FITTINGS

Full Coupling

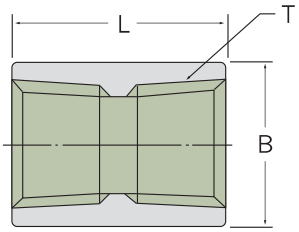

Size T	B	L	Unit Weight (Kg)
3000 lb			
¼	22.0	35.1	0.050
⅜	25.0	38.1	0.061
½	30.0	48.0	0.142
¾	35.0	51.0	0.218
1	45.0	61.0	0.418
1¼	57.0	67.0	0.720
1½	63.5	80.0	1.065
2	76.0	86.0	1.400
2½	92.0	92.0	2.550
3	108.0	108.0	3.830
3½	127.0	114.3	5.720
4	140.0	121.0	6.350
6000 lb			
¼	25.0	35.0	0.120
⅜	32.0	38.0	0.180
½	38.1	48.0	0.280
¾	45.0	51.0	0.450
1	57.0	61.0	0.800
1¼	63.5	67.0	1.400
1½	76.0	80.0	1.950
2	92.0	86.0	2.800
2½	108.0	92.0	3.800
3	127.0	108.0	6.010
3½	140.0	114.3	8.250
4	160.0	121.0	10.700

Half Coupling

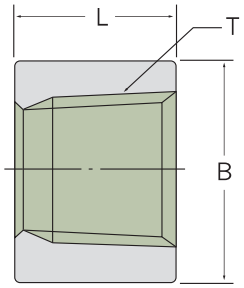

Size T	B	L	Unit Weight (Kg)
3000 lb			
¼	22.0	17.5	0.025
⅜	25.0	19.0	0.030
½	30.0	24.0	0.070
¾	35.0	25.5	0.100
1	45.0	30.5	0.210
1¼	57.0	33.5	0.365
1½	63.5	40.0	0.520
2	76.0	43.0	0.690
2½	92.0	46.0	1.250
3	108.0	54.0	1.840
3½	127.0	57.5	2.860
4	140.0	60.5	3.510
6000 lb			
¼	25.0	17.5	0.06
⅜	32.0	19.0	0.09
½	38.1	24.0	0.14
¾	45.0	25.5	0.23
1	57.0	30.5	0.37
1¼	63.5	33.5	0.70
1½	76.0	40.0	0.90
2	92.0	43.0	1.22
2½	108.0	46.0	1.85
3	127.0	54.0	2.95
3½	140.0	57.5	4.12
4	160.0	60.5	5.40

CAP

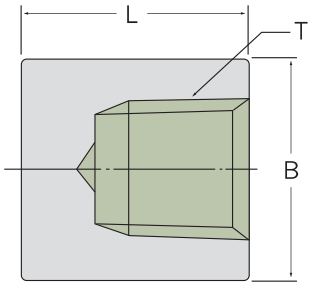

Size T	B	L	Unit Weight (Kg)
3000 lb			
¼	22.0	25	0.05
⅜	25.0	25	0.08
½	30.0	32	0.12
¾	35.0	37	0.20
1	45.0	41	0.31
1¼	57.0	44	0.60
1½	63.5	44	0.73
2	76.0	48	1.05
2½	92.0	60	2.27
3	108.0	65	3.83
3½	127.0	68	4.52
4	140.0	68	6.35
6000 lb			
¼	25.0	27	0.09
⅜	32.0	27	0.14
½	38.1	33	0.25
¾	45.0	38	0.36
1	57.0	43	0.70
1¼	63.5	46	0.80
1½	76.0	48	1.28
2	92.0	51	2.16
2½	108.0	64	2.72
3	127.0	68	4.95
3½	140.0	70	6.84
4	160.0	75	9.21

- Dimensions are in millimeters.
- Dimensional Tolerances See ASME B16.11 or JIS B2316

THREADED FITTINGS

3000lb

Hex. Head Plug

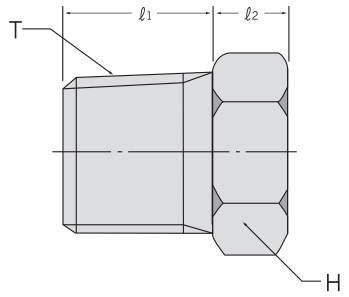

Size T	ℓ2	ℓ2	H	Unit Weight (Kg)
3000 lb				
⅛	11	6.3	11.0	0.03
¼	13	6.3	14.0	0.03
⅜	14	8.0	19.0	0.06
½	18	8.0	22.0	0.08
¾	19	10.0	27.0	0.14
1	21	10.0	36.0	0.22
1¼	22	14.0	46.0	0.51
1½	24	16.0	50.0	0.62
2	25	18.0	63.5	1.02
2½	32	19.0	76.2	1.76
3	40	21.0	99.0	2.66
3½	41	22.0	103.0	3.72
4	42	32.0	117.0	5.90

Square Plug

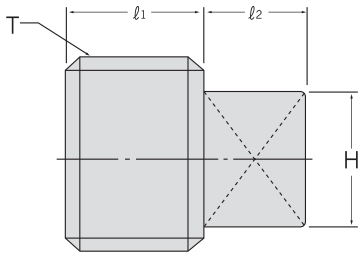

Size T	ℓ2	ℓ2	H	Unit Weight (Kg)
3000 lb				
⅛	9.9	6.6	7.0	0.007
¼	13.0	6.6	9.0	0.014
⅜	13.0	7.9	12.0	0.028
½	15.0	9.9	14.0	0.057
¾	16.0	11.0	17.0	0.085
1	20.1	13.0	19.0	0.140
1¼	21.1	15.0	24.0	0.255
1½	21.1	16.0	27.0	0.397
2	23.1	18.0	32.0	0.680
2½	27.0	20.0	38.1	1.020
3	29.0	21.0	42.9	1.301
3½	30.0	22.2	47.6	2.050
4	32.0	25.0	63.5	3.257

Round Plug

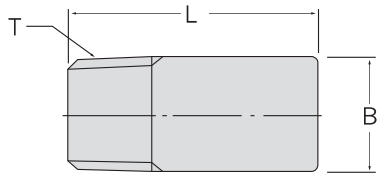

Size T	B	L	Unit Weight (Kg)
3000 lb			
⅛	10.3	35.0	0.057
¼	13.5	41.3	0.057
⅜	17.5	41.3	0.085
½	21.4	44.5	0.170
¾	27.0	44.5	0.170
1	33.4	50.8	0.340
1¼	42.9	50.8	0.340
1½	48.4	50.8	0.710
2	60.3	63.5	1.361
2½	73.0	70.0	2.155
3	88.9	70.0	3.456
3½	101.6	76.2	4.216
4	114.3	76.2	5.838

Hex. Nipple

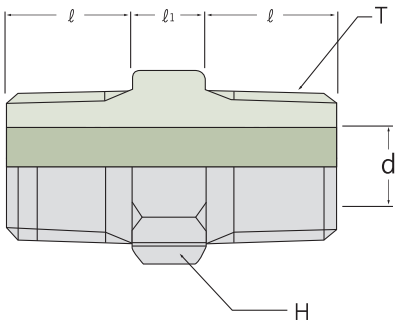

Size T	d	H	ℓ	ℓ1
3000 lb				
⅛	4	HEX12	10	6
¼	7	HEX17	14	8
⅜	9	HEX19	15	8
½	12	HEX22	19	9
¾	16	HEX27	21	10
1	20	HEX36	24	11
1¼	28	HEX46	27	12
1½	32	HEX50	27	14
2	40	HEX65	31	16

THREADED FITTINGS

3000lb

Hex. Bushing

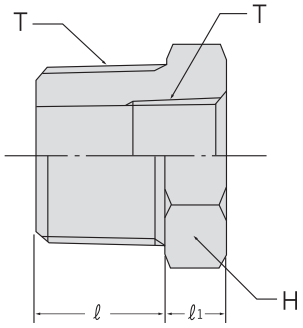

T (PT) × T1 (PT)	H	ℓ	ℓ1
3000 lb			
¼ × ⅛	HEX17	14	8
⅜ × ¼	HEX19	15	8
½ × ¼	HEX24	19	9
½ × ⅜	HEX24	19	9
¾ × ¼	HEX30	21	10
¾ × ⅜	HEX30	21	10
¾ × ½	HEX30	21	10
1 × ¼	HEX36	24	11
1 × ⅜	HEX36	24	11
1 × ½	HEX36	24	11
1 × ¾	HEX36	24	11
1¼ × ½	HEX46	27	12
1¼ × ¾	HEX46	27	12
1¼ × 1	HEX46	27	12
1½ × ½	HEX50	27	14
1½ × ¾	HEX50	27	14
1½ × 1	HEX50	27	14
1½ × 1¼	HEX50	27	14
2 × ¾	HEX65	31	16
2 × 1	HEX65	31	16
2 × 1¼	HEX65	31	16
2 × 1½	HEX65	31	16

Boss Type A

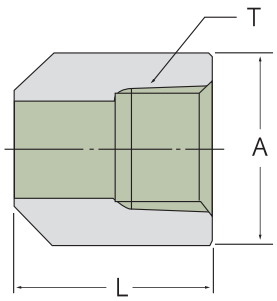

T (PT)	A	L
3000 lb		
¼	22	30
⅜	26	30
½	32	33
¾	38	35
1	46	43
1¼	55	46
1½	65	50
2	75	57

THREADED FITTINGS

3000lb, 6000lb

R.J Union

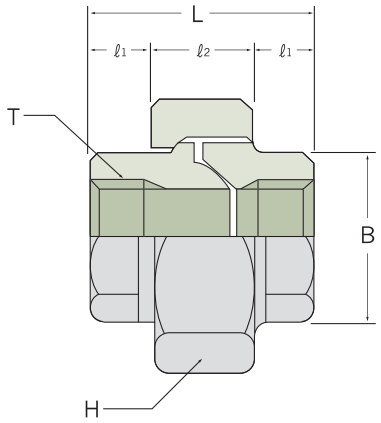

Size T	B	ℓ1	ℓ2	L	H	Unit Weight (Kg)
3000 lb						
¼	21.0	11.5	18	41	35HEX	0.19
⅜	25.0	14.0	18	46	40HEX	0.25
½	32.0	15.0	21	51	46HEX	0.43
¾	40.0	17.0	23	57	58HEX	0.62
1	48.0	19.5	25	64	65HEX	1.03
1¼	55.5	22.5	27	72	76OCT	1.15
1½	63.5	24.0	30	78	83OCT	1.54
2	76.0	26.0	36	88	103OCT	3.05
2½	95.0	34.0	42	110	124OCT	5.14
3	110.0	37.0	45	120	150OCT	7.12
4	148.0	45.0	50	140	180OCT	12.40
6000 lb						
¼	25.4	13.5	19	46	40HEX	0.25
⅜	32.0	15.0	21	51	46HEX	0.43
½	40.0	17.0	23	57	56HEX	0.62
¾	44.5	19.5	25	64	65HEX	0.94
1	51.0	22.5	27	72	74OCT	1.08
1¼	57.2	24.0	30	78	83OCT	1.41
1½	71.5	26.0	36	88	103OCT	2.75
2	90.0	34.0	42	110	124OCT	5.05
2½	105.0	37.5	45	120	150OCT	6.87
3	125.0	45.0	50	140	180OCT	10.85

O-Ring Union

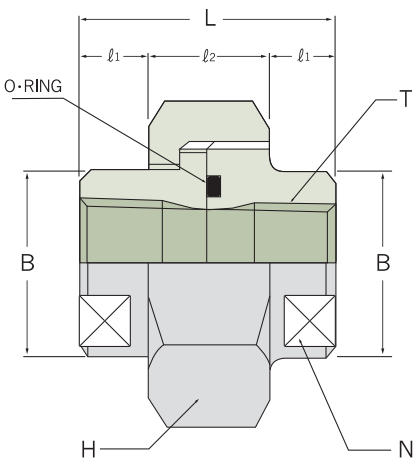

Size T	B	ℓ1	ℓ2	L	L	H	O-Ring	Unit Weight (Kg)
3000 lb								
¼	22	10	18	38	21	35HEX	P18	0.160
⅜	27	10	18	38	26	41HEX	P20	0.215
½	32	12	20	44	32	46HEX	G25	0.312
¾	38	12	26	50	38	54HEX	G30	0.477
1	47	15	26	56	46	63HEX	G35	0.764
1¼	56	15	30	60	54	77HEX	G45	1.106
1½	63	18	36	72	63	80OCT	G50	1.327
2	76	18	36	72	77	95OCT	G65	1.856

- Dimensions are in millimeters.
- Dimensional Tolerances See ASME B16.11 or JIS B2316

FORGED OUTLET FITTINGS

STD(Sch40), X-S(Sch80), Sch160, XX-s

Weldolet(SWLT)

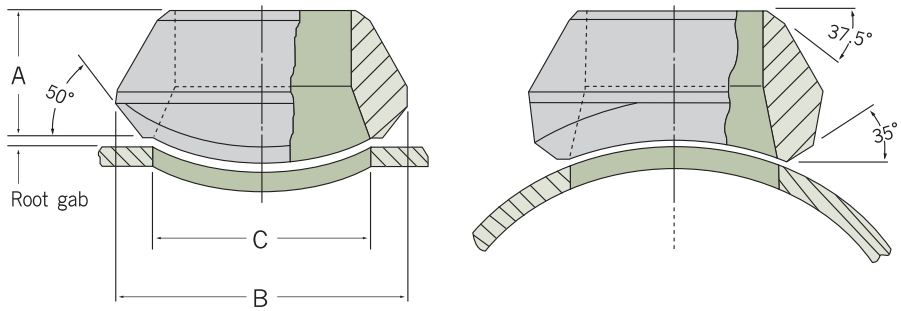

STD, X-S

Outlet Size	A		B		C		APP'Weight(kg)	
	STD	X-S	STD	X-S	STD	X-S	STD	X-S
½	19.1	19.1	34.9	34.9	23.8	23.8	0.08	0.09
¾	22.2	22.2	44.5	44.5	30.2	30.2	0.11	0.14
1	27.0	27.0	54.0	54.0	36.5	36.5	0.23	0.21
1¼	31.8	31.8	65.1	65.1	44.5	44.5	0.36	0.41
1½	33.3	33.3	73.0	73.0	50.8	50.8	0.45	0.50
2	38.1	38.1	88.9	88.9	65.1	65.1	0.80	0.80
2½	41.3	41.3	103.2	103.2	76.2	76.2	1.14	1.20
3	44.5	44.5	122.2	122.2	93.7	93.7	1.82	1.90
4	50.8	50.8	152.4	152.4	120.7	120.7	2.86	2.90
5	57.2	57.2	179.4	179.4	141.3	141.3	4.66	4.70
6	60.3	77.8	215.9	225.4	169.9	169.9	6.45	10.50
8	69.9	98.5	263.5	292.1	220.7	220.7	10.68	16.80
10	77.8	93.7	322.3	323.9	274.7	265.1	17.73	20.90
12	85.7	103.2	377.8	397.4	325.4	317.5	26.82	27.70
14	88.9	100.0	409.6	431.8	357.2	350.8	30.00	31.80
16	93.7	106.4	463.6	466.7	408.0	403.2	34.10	46.40
18	96.8	111.1	520.7	523.9	458.8	455.6	44.10	59.10
20	101.6	119.1	571.5	582.6	508.0	509.6	53.60	71.80
24	115.9	139.7	689.0	708.0	614.4	638.2	100.00	131.80

Sch 160, XX-S

Outlet Size	A		B		C		APP'Weight(kg)	
	Sch 160	XX-s	Sch 160	XX-s	Sch 160	XX-s	Sch 160	XX-s
½	28.6	28.6	34.9	34.9	14.3	14.3	0.11	-
¾	31.8	31.8	44.5	44.5	19.1	19.1	0.32	-
1	38.1	38.1	50.8	50.8	25.4	25.4	0.38	0.38
1¼	44.5	44.5	61.9	61.9	33.3	33.3	0.57	0.57
1½	50.8	50.8	69.9	69.9	38.1	38.1	0.80	0.80
2	55.6	55.6	81.0	81.0	42.9	42.9	1.00	1.00
2½	61.9	61.9	96.8	96.8	54.0	54.0	1.54	1.54
3	73.0	73.0	120.7	120.7	73.0	73.0	2.90	2.90
4	84.1	84.1	152.4	152.4	98.4	98.4	4.80	4.80
5	93.7	93.7	187.3	187.3	122.2	122.2	6.50	6.50
6	104.8	104.8	220.7	220.7	146.1	146.1	12.70	12.70
8	111.1	111.1	284.2	284.2	173.0	173.0	20.50	20.50
10	125.4	125.4	312.7	312.7	215.9	215.9	38.60	38.60

- Dimensions are in millimeters.
- Applicable Run Pipe Sizes are from Out-Let size to 36 inch.

FORGED OUTLET FITTINGS

3000#, 6000#

Sockolet(SCLT)

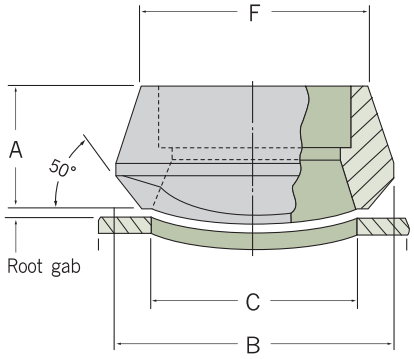

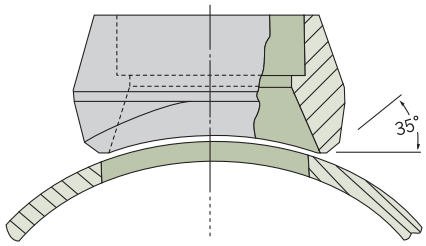

Outlet Size	A		B		C		F		APP'Weight(kg)	
	3000#	6000#	3000#	6000#	3000#	6000#	3000#	6000#	3000#	6000#
½	25.4	31.8	34.9	44.5	23.8	19.1	31.8	39.7	0.14	0.23
¾	27.0	36.5	44.5	50.8	30.2	25.4	36.5	46.6	0.15	0.36
1	33.3	39.7	54.0	61.9	36.5	33.3	46.0	57.2	0.27	0.59
1¼	33.3	41.3	65.1	69.9	44.5	38.1	55.6	65.1	0.39	0.73
1½	34.9	42.9	73.0	82.6	50.8	49.2	61.9	76.2	0.47	0.91
2	38.1	58.7	88.9	103.2	65.1	58.7	74.6	92.1	0.73	2.33
2½	46.0	-	103.2	-	76.2	-	87.3	-	1.25	-
3	50.8	-	122.2	-	93.7	-	104.8	-	1.73	-
4	57.2	-	152.4	-	120.7	-	130.2	-	3.30	-

Threadolet(STLT)

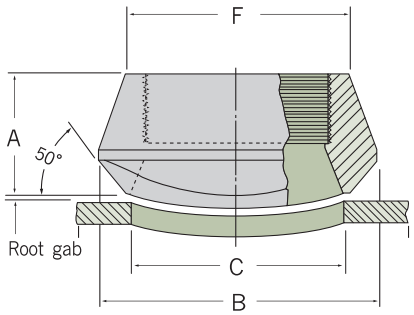

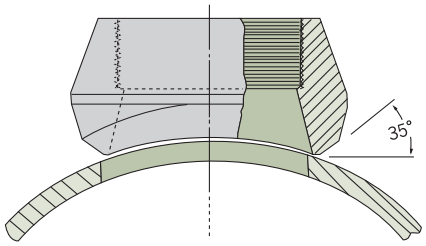

Outlet Size	A		B		C		F		APP'Weight(kg)	
	3000#	6000#	3000#	6000#	3000#	6000#	3000#	6000#	3000#	6000#
½	25.4	31.8	34.9	44.5	23.8	19.1	31.8	39.7	0.11	0.20
¾	27.0	36.5	44.5	50.8	30.2	25.4	36.5	46.6	0.16	0.34
1	33.3	39.7	54.0	61.9	36.5	33.3	46.0	57.2	0.28	0.56
1¼	33.3	41.3	65.1	69.9	44.5	38.1	55.6	65.1	0.41	0.71
1½	34.9	42.9	73.0	82.6	50.8	49.2	61.9	76.2	0.45	0.89
2	38.1	52.4	88.9	103.2	65.1	69.9	74.6	92.1	0.80	2.31
2½	46.0	-	103.2	-	76.2	-	87.3	-	1.36	-
3	50.8	-	122.2	-	93.7	-	104.8	-	1.98	-
4	57.2	-	152.4	-	120.7	-	130.2	-	3.23	-

- Dimensions are in millimeters.
- Applicable Run Pipe Sizes are from Out-let Size to 36 inch
- For the 3000# and 6000# Sockolets and Threadolets, Inside Bore, Thread Socket Bore and Socket Depth Dimensions are According to ASME B16.11.

FORGED OUTLET FITTINGS

3000lb

Nippolet

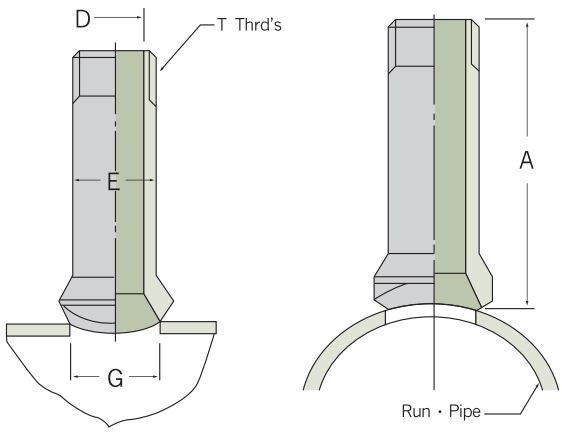

Run Pipe Size	Outlet Size T	A	G	D	E	Unit Weight (kg)
3000 lb						
36- ¾	¼	88.9	23.9	14.0	21.3	0.36
36-1	⅜	88.9	30.2	18.8	26.7	0.56
36- ¼	1	88.9	36.6	24.4	33.3	0.84
36- ½	1¼	88.9	44.5	32.5	42.2	1.22
36-2	1½	88.9	50.8	38.1	48.3	2.00
36-2 ½	2	88.9	65.0	49.3	60.5	3.12

Swaged Nipple

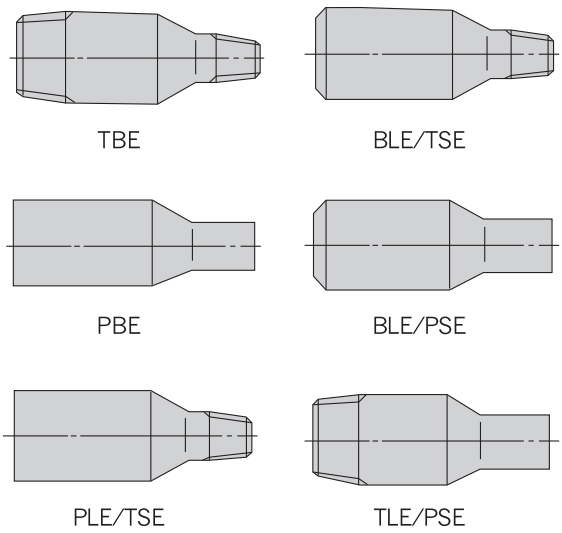

•Swaged Nipples are made from Forged Steel or Pipe

Large end Size	Small end Size	Length(mm)
3000 lb		
½	⅜ ~⅛	70
¾	½ ~⅛	76
1	½ ~¼	89
1¼	1 ~⅛	102
1½	1¼ ~⅛	114
2	1½ ~⅛	165
2½	2 ~⅛	178
3	2½ ~⅛	203
3½	3 ~⅛	203
4	3½ ~⅛	229

TBE : Threaded both end
PBE : Plain both end
PLE/TSE : Plain large end-Threaded small end
BLE/TSE : Beveled large end Threaded small end
BLE/PSE : Beveled large end-Plain small end
TLE/PSE : Threaded large end-Plain small end

TECHNICAL DATA

D OUTLET FITTINGS

1. Forged Socket Welding. Threaded Fitting Bore

in millimeters.

	ASME B16.11			JIS B2316	
	Socket Welding(M)		Threaded(T)	Socket Welding(M)	Threaded(T)
⅛"	10.90,	10.65	NPT ⅛	11.0	PT ⅛
¼"	14.35,	14.10	NPT ¼	14.3	PT ¼
⅜"	17.80,	17.55	NPT ⅜	17.8	PT ⅜
½"	21.95,	21.70	NPT ½	22.2	PT ½
¾"	27.30,	27.05	NPT ¾	27.7	PT ¾
1"	34.05,	33.80	NPT 1	34.5	PT 1
1 ¼"	42.80,	42.55	NPT 1 ¼	43.2	PT 1 ¼
1 ½"	48.90,	48.65	NPT 1 ½	49.1	PT 1 ½
2"	61.35,	61.10	NPT 2	61.1	PT 2
2 ½"	74.20,	73.80	NPT 2 ½	77.1	PT 2 ½
3"	90.15,	89.80	NPT 3	90.0	PT 3
4"	115.8,	115.45	NPT 4	115.4	PT 4

2. TOLERANCE
Forged Socket Welding, Threaded Fitting(ASME B16.11)

Nominal Pipe Size	All Fittings				Elbow, Tee, Cross	Coupling	Half Coupling
	Socket Bore Dia	Bore Dia. of Fitting	Concentricity of Bore	Concidence of Axis	Center to Bottom of Socket	Bottom to Bottom of Socket	Bottom to Socket to Opposite Face
⅛–¼	+0.012 −0.000	±0.03	Socket and Fitting bores within ±0.03	Maximum variation in alignment of socket and fitting bores for in 12	±0.03	±0.06	±0.03
⅜–¾	+0.012 −0.000	±0.03			±0.06	±0.12	±0.06
1–2	+0.012 −0.000	±0.03			±0.08	±0.16	±0.08
2 ½–3	+0.012 −0.000	±0.06			±0.10	±0.20	±0.10

TECHNICAL DATA

3. KS B0222 & JIS B0203 Pipe Threads

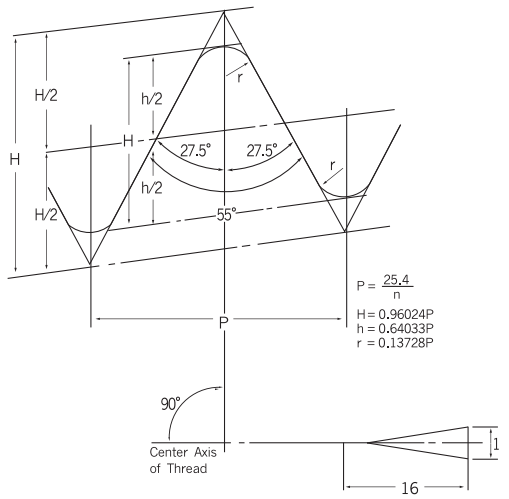

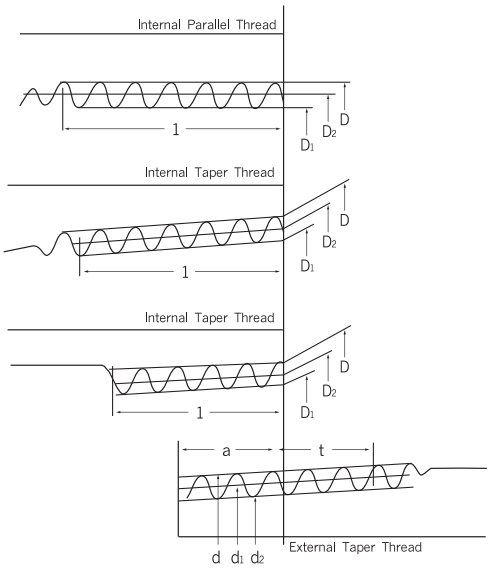

Basic Thread Data

Nominal Size	Number of Threads Per Inch	Screw Thread			Basic Diameter			Position of Basic Diameter			Tolerances on Basic Diameters of Internal Parallel Thread	Effective Thread Length (Min.)				Nominal Pipe Size (For Reference)	
		Pitch	Height of Thread	Rounding	External Thread			External Thread		Internal Thread		External Thread	Internal Thread				
					Major Diameter d	Pitch Diameter d_2	Minor Diameter d_1	From the Ena' of Pipe		The End of Pipe		Fitting Allowance	When there is an Incomplate thread or More		When there is no Incomplete Thread		
					Internal Thread												
					Major Diameter	Pitch Diameter	Minor Diameter	Basic Length	Tolerance Axially	Tolerance Axially			Internal Taper thread	Internal Par-allel Thread	Internal Taper and Parallel thread	Outside Diameter	Wall thickness
	n	P	h	r	D	D_2	D_1	a	±b	±c	±	f	l	l	t		
PT 15(½)	14	1.8143	1.162	0.25	20.955	19.793	18.631	8.16	1.81	2.27	0.142	5.00	12.7	15.0	9.1	21.7	2.8
PT 20(¾)	14	1.8143	1.162	0.25	26.441	25.279	24.117	9.53	1.81	2.27	0.142	5.60	14.1	16.3	10.2	27.2	2.8
PT 25(1)	11	2.3091	1.479	0.32	33.249	31.770	30.291	10.39	2.31	2.89	0.180	6.40	16.2	19.0	11.5	34.0	3.2
PT 32(1¼)	11	2.3091	1.479	0.32	41.910	40.431	38.952	12.70	2.31	2.89	0.180	6.40	18.5	21.4	13.4	42.7	3.5
PT 40(1½)	11	2.3091	1.479	0.32	47.803	46.324	44.845	12.70	2.31	2.89	0.180	6.40	18.5	21.4	13.4	48.6	3.5
PT 50(2)	11	2.3091	1.479	0.32	59.614	58.135	56.656	15.88	2.31	2.89	0.180	7.50	22.8	25.7	16.9	60.5	3.8
PT 65(2½)	11	2.3091	1.479	0.32	75.184	73.705	72.226	17.46	3.46	3.46	0.217	9.22	26.7	30.2	18.6	76.3	4.2
PT 80(3)	11	2.3091	1.479	0.32	87.884	86.405	84.926	20.64	3.46	3.46	0.217	9.22	29.9	33.3	21.1	89.1	4.2
PT 90(3½)	11	2.3091	1.479	0.32	100.330	98.851	97.372	22.23	3.46	3.46	0.217	9.30	31.5	34.9	22.4	101.6	4.2
PT 100(4)	11	2.3091	1.479	0.32	113.030	111.551	110.072	25.40	3.46	3.46	0.217	10.40	35.9	39.3	25.9	114.3	4.5
PT 125(5)	11	2.3091	1.479	0.32	138.430	136.952	135.472	25.58	3.46	3.46	0.217	11.40	40.1	43.6	29.3	139.8	4.5
PT 150(6)	11	2.3091	1.479	0.32	163.830	162.351	160.872	28.58	3.46	3.46	0.217	11.50	40.1	43.6	29.3	165.2	5.0

• Dimensions are in millimeters.

TECHNICAL DATA

4. ASME B1.20.1 Taper Pipe Threads. (Except Dryseal)

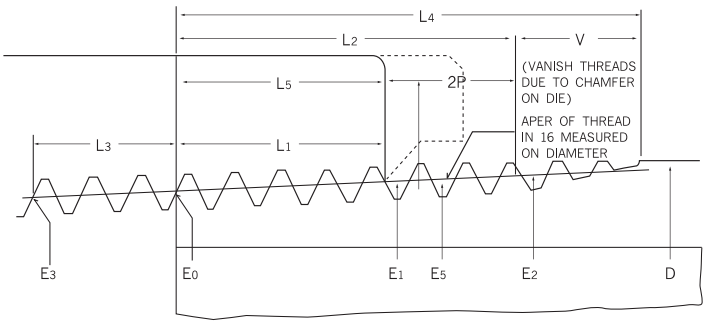

Thread Height Dimensions

Theread Element	27 Threads Per inch P= 0.03704	18 Threads Per inch P= 0.05556	14 Threads Per inch P= 0.07143	11½ Threads Per inch P= 0.08696	8 Threads Per inch P= 0.12500
H=0.866p	0.0321	0.4810	0.0619	0.0753	0.1082
hs=hh=0.760p	0.0281	0.0422	0.0543	0.0661	0.0950
frs=frn=0.033p	0.0012	0.0088	0.0024	0.0029	0.0041
fcs=fcn=0.073p	0.0027	0.0041	0.0052	0.0063	0.0091

Taper 1 in 16 on Diameter
(Shown Exaggerated in Diagram)

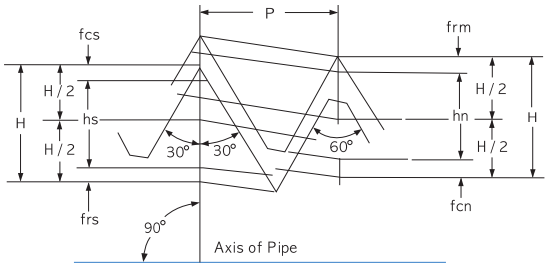

Basic Thread Data

Nominal Pipe Size (NPT)	Outside Diameter of Pipe D	Threads per inch n	Pitch of Thread P	Pich Diameter at beginning of External Thread	Handtight Engagement			Effective Thread, External		
					Length L_1		Dia E_1	Length L_2		Dia E_2
					In.	Thds.		In.	Thds.	
1	2	3	4	5	6	7	8	9	10	11
⅛	0.405	27.0	0.03704	0.36351	0.1615	4.36	0.37360	0.2639	7.12	0.38000
¼	0.540	18.0	0.05556	0.47739	0.2278	4.10	0.49163	0.4018	7.23	0.50250
⅜	0.675	18.0	0.05556	0.61201	0.2400	4.32	0.62701	0.4078	7.43	0.63750
½	0.840	14.0	0.07143	0.75843	0.3200	4.48	0.77843	0.5337	7.47	0.79179
¾	1.050	14.0	0.07143	0.96768	0.3390	4.75	0.98887	0.5457	7.64	1.00179
1	1.315	11.5	0.08696	1.21363	0.4000	4.60	1.23863	0.6828	7.85	1.25630
1 ¼	1.660	11.5	0.08696	1.55713	0.4200	4.83	1.58338	0.7068	8.13	1.60130
1 ½	1.900	11.5	0.08696	1.79609	0.4200	4.83	1.82234	0.7235	8.32	1.84130
2	2.375	11.5	0.08695	2.26902	0.4360	5.01	2.29627	0.7565	8.70	2.31630
2 ½	2.875	8.0	0.12500	2.71953	0.6820	5.46	2.76216	1.1375	9.10	2.79062
3	3.500	8.0	0.12500	3.34062	0.7660	6.13	3.38850	1.2000	9.60	3.41562
3½	4.000	8.0	0.12500	3.83750	0.8210	6.57	3.88881	1.2500	10.00	3.91562
4	4.500	8.0	0.12500	4.33438	0.8440	6.75	4.38712	1.3000	10.40	4.41562

Nominal Pipe Size (NPT)	Wrench Makeup Length for External Thread L_2 L_1		Wrench Makeup Length for External Thread			Vanish Thread V		Overall Length External Thread L_4	Nominal, Complete External Threads[5]		Height of Thread h	Increase in Dia per Thread, 0.0625/n	Basic Mimor Dia at Small End of Pipe, Ka
			Length L_3		Dia. E_3				Length L_4	Dia E_5			
	In.	Thds.	In.	Thds.		In.	Thds.						
1	12	13	14	15	16	17	18	19	20	21	22	23	24
⅛	0.1024	2.76	0.1111	3	0.35656	0.1285	3.47	0.3924	0.1898	0.37537	0.02963	0.00231	0.3339
¼	0.1740	3.13	0.1667	3	0.46697	0.1928	3.47	0.5946	0.2907	0.49556	0.04444	0.00347	0.4329
⅜	0.1678	3.02	0.1667	3	0.60160	0.1928	3.47	0.6006	0.2967	0.63056	0.04444	0.00347	0.5676
½	0.2137	2.99	0.2143	3	0.74504	0.2478	3.47	0.7815	0.3909	0.78286	0.05714	0.00446	0.7013
¾	0.2067	2.89	0.2143	3	0.95429	0.2478	3.47	0.7935	0.4029	0.99286	0.05714	0.00446	0.9105
1	0.2828	3.25	0.2609	3	1.19733	0.3017	3.47	0.9845	0.5089	1.24543	0.06957	0.00543	1.1441
1 ¼	0.2868	3.30	0.2609	3	1.54083	0.3017	3.47	1.0085	0.5329	1.59043	0.06957	0.00543	1.4876
1 ½	0.3035	3.49	0.2609	3	1.77978	0.3017	3.47	1.0252	0.5496	1.83043	0.06957	0.00543	1.7265
2	0.3205	3.69	0.2609	3	2.25272	0.3017	3.47	1.0582	0.5826	2.30543	0.06957	0.00543	2.1995
2 ½	0.4555	3.64	0.2500[7]	2	2.70391	0.4337	3.47	1.5712	0.8875	2.77500	0.10000	0.00781	2.6195
3	0.4340	3.47	0.2500[7]	2	3.32500	0.4337	3.47	1.6337	0.9500	3.40000	0.10000	0.00781	3.2406
3½	0.4290	3.43	0.2500	2	3.82188	0.4337	3.47	1.6837	1.0000	3.90000	0.10000	0.00781	3.7375
4	0.4560	3.65	0.2500	2	4.31875	0.4337	3.47	1.7337	1.0500	4.40000	0.10000	0.00781	4.2344

• Dimensions are in inches.

TECHNICAL DATA

5. BS21-1973 British Standard Taper Pipe Threads. (Except Dryseal)

H = 0.960237 P
h = 0.460327 P
r = 0.137278 P

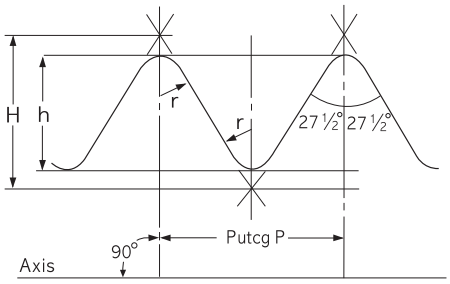

Taper 1 in 16 on Diameter
(Shown Exaggerated in Diagram)

BSP Size Nominal Bore of Pipe	No. of Threads per inch	Pitch		Depth of Thread		BASIC-Diameters at Grage Plane						Gauqe Lenath							
						Major (Gauge Diameter)		Effective		Minor		Basic		Tolerance Plus and Minus		Max.		Min.	
in.		in.	mm	in.	mm	in.	mm	in.	mm	in.	mm	in.	mm	in.	mm	in.	mm	in.	mm
½	14	0.07143	1.814	0.0457	1.162	0.825	20.955	0.7793	19.793	0.7336	18.631	0.3214	8.2	0.0714	1.8	0.3928	10.0	0.2500	6.4
¾	14	0.07143	1.814	0.0457	1.162	1.041	24.441	0.9953	25.279	0.9496	24.117	0.3750	9.5	0.0714	1.8	0.4464	11.3	0.3036	7.7
1	11	0.09091	2.309	0.0582	1.479	1.309	33.249	1.2508	31.770	1.1926	30.291	0.4091	10.4	0.0909	2.3	0.5000	12.7	0.3182	8.1
1 ¼	11	0.09091	2.309	0.0582	1.479	1.650	41.910	1.5918	40.431	1.5335	38.952	0.5000	12.7	0.0909	2.3	0.5909	15.0	0.4091	10.4
1 ½	11	0.09091	2.309	0.0582	1.479	1.882	47.803	1.8238	46.324	1.7656	44.845	0.5000	12.7	0.0909	2.3	0.5909	15.0	0.4091	10.4
2	11	0.09091	2.309	0.0582	1.479	2.347	59.614	2.2888	58.135	2.2306	56.656	0.6250	15.9	0.0909	2.3	0.7159	18.2	0.5341	13.6
2 ½	11	0.09091	2.309	0.0582	1.479	2.960	75.184	2.9018	73.705	2.8436	72.226	0.6875	17.5	0.1364	3.5	0.8239	21.0	0.5511	14.0
3	11	0.09091	2.309	0.0582	1.479	3.460	87.884	3.4018	86.405	3.3436	84.926	0.8125	20.6	0.1364	3.5	0.9486	24.1	0.6761	17.1
4	11	0.09091	2.309	0.0582	1.479	4.450	113.030	4.3918	111.551	4.3336	110.072	1.0000	25.4	0.1364	3.5	1.1364	28.9	0.8636	21.9
5	11	0.09091	2.309	0.0582	1.479	5.450	138.430	5.3918	136.951	5.3336	135.472	1.1250	28.6	0.1364	3.5	1.2614	32.1	0.9886	25.1
6	11	0.09091	2.309	0.0582	1.479	6.450	162.351	6.3918	162.351	6.3336	160.872	1.1250	28.6	0.1364	3.5	1.2614	32.1	0.9886	25.1

BSP Size Nominal Bore of Pipe	No. of Threads per inch	Effective Thread, External						Fitting Allowance		Wrenhing Allowance		Tolerance of Position of Gauge Plane Relative to Face of internally Taper Threaded Patrs (Plus and Minuts)		BSP Size Nominal Bore of Pipe
		For Basic Gauge Length		For Max. Gauge Length		For Min. Gauge Length								
in.		in.	mm	in.	mm	in.	mm	in.	mm	in.	mm	in.	mm	in.
⅛	14	0.5178	13.2	0.5892	15.0	0.4464	11.4	0.1964	5.0	0.1071	2.7	0.0893	2.3	½
¾	14	0.5714	14.5	0.6428	16.3	0.5000	12.7	0.1964	5.0	0.1071	2.7	0.0893	2.3	¾
1	11	0.6591	16.8	0.7500	19.1	0.5682	14.5	0.2500	6.4	0.1364	3.5	0.1136	2.9	1
1 ¼	11	0.7500	19.1	0.8509	21.4	0.6591	16.8	0.2500	6.4	0.1364	3.5	0.1136	2.9	1 ¼
1 ½	11	0.7200	19.1	0.8409	21.4	0.6591	16.8	0.2500	6.4	0.1364	3.5	0.1136	2.9	1 ½
2	11	0.9204	23.4	1.0113	25.7	0.8259	21.1	0.2954	7.5	0.1818	4.6	0.1136	2.9	2
2 ½	11	1.0511	26.7	1.1875	30.2	0.9247	23.2	0.3636	9.2	0.2273	5.8	0.1364	3.5	2 ½
3	11	1.1761	29.8	1.3125	33.3	1.0397	26.3	0.3636	9.2	0.2273	5.8	0.1364	3.5	3
4	11	1.4091	35.8	1.5455	39.3	1.2727	32.3	0.4091	10.4	0.2727	6.9	0.1364	3.5	4
5	11	1.5795	40.1	1.7159	43.6	1.4431	36.6	0.4545	11.5	0.3182	8.1	0.1364	3.5	5
6	11	1.5795	40.1	1.7159	43.6	1.4431	36.6	0.4545	11.5	0.3182	8.1	0.1364	3.5	6

TECHNICAL DATA

6. Material Specifications

ASTM STANDARD

ASTM	Grade	Classification	CHEMICAL COMPOSITION								MECHANICAL PROPERTIES				
			C %	Mn %	P Max. %	S Max. %	Si %	Ni %	Cr %	Mo %	T.S. Min. psi (kg/㎟)	Y.S. Min. psi (kg/㎟)	EL. Min. %	Red. Min. %	HB
A-105*		Carbon Steel	Max 0.35	0.60~ 1.05	0.040	0.050	Max 0.35	Max 0.40	Max 0.30	Max 0.12	70,000 (49.2)	36,000 (25.3)	22	30	Max 187
A-181*	60	Carbon Steel	Max 0.35	Max 0.90	0.050	0.050	Max (0.35)				60,000 (42.2)	30,000 (21.1)	22	35	
A-181	70	Carbon Steel	Max 0.35	Max 0.90	0.050	0.050	Max (0.35)				70,000 (49.2)	36,000 (25.3)	18	24	
A-182	F1	½MO	Max 0.28	0.60~ 0.90	0.045	0.045	0.15~ 0.35			0.44~ 0.65	70,000 (49.2)	40,000 (28.1)	20	30	143~ 192
A-182	F5	5Cr-½MO	Max 0.15	0.30~ 0.60	0.030	0.030	Max 0.50	Max 0.50	4.00~ 6.00	0.44~ 0.65	70,000 (49.2)	40,000 (28.1)	20	35	143~ 217
A-182	F5a	5Cr-½MO	Max 0.25	Max 0.60	0.040	0.030	Max 0.50	Max 0.50	4.00~ 6.00	0.44~ 0.65	90,000 (63.3)	65,000 (45.7)	22	50	187~ 248
A-182	F11-1	1¼Cr-½MO	0.05~ 0.15	0.30~ 0.60	0.030	0.030	0.50~ 1.00		1.00~ 1.50	0.44~ 0.65	60,000 (42.2)	30,000 (21.1)	20	45	121~ 174
A-182	F11-2	1¼Cr-½MO	0.10~ 0.20	0.30~ 0.80	0.040	0.040	0.50~ 1.00		1.00~ 1.50	0.44~ 0.65	70,000 (49.2)	40,000 (28.1)	20	30	143~ 207
A-182	F11-3	1¼Cr-½MO	0.10~ 0.20	0.30~ 0.80	0.040	0.040	0.50~ 1.00		1.00~ 1.50	0.44~ 0.65	75,000 (52.7)	45,000 (31.6)	20	30	156~ 207
A-182	F12-1	1Cr-½MO	0.05~ 0.15	0.30~ 0.60	0.045	0.045	Max 0.50		0.80~ 1.25	0.44~ 0.65	60,000 (42.2)	30,000 (21.1)	20	45	121~ 174
A-182	F12-2	1Cr-½MO	0.10~ 0.20	0.30~ 0.80	0.040	0.040	0.10~ 0.60		0.80~ 1.25	0.44~ 0.65	70,000 (49.2)	40,000 (28.1)	20	30	143~ 174
A-182	F11	1¼Cr-½MO	0.10~ 0.20	0.30~ 0.60	0.040	0.040	0.50~ 1.00		1.00~ 1.50	0.44~ 0.65	70,000 (49.2)	40,000 (28.1)	20	30	143~ 207
A-182	F12	1Cr-½MO	0.10~ 0.20	0.30~ 0.80	0.040	0.040	0.10~ 0.60		0.80~ 1.25	0.44~ 0.65	70,000 (49.2)	40,000 (28.1)	20	30	143~ 207
A-182	F22	2¼Cr-1 MO	Max 0.15	0.30~ 0.60	0.040	0.040	Max 0.50		2.00~ 2.50	0.87~ 1.13	75,000 (52.7)	45,000 (31.6)	20	30	156~ 207
A-182	F304	18Cr-8 Ni	Max 0.08	Max 2.00	0.040	0.030	Max 1.00	8.00~ 11.00	18.00~ 20.00		75,000 (52.7)	30,000 (21.1)	30	50	
A-182	F304L	18Cr-8 Ni Low	Max 0.035	Max 2.00	0.040	0.030	Max 1.00	8.00~ 13.00	18.00~ 20.00		75,000 (49.2)	25,000 (17.6)	30	50	
A-182	F316	18Cr-8 Ni Mo	Max 0.08	Max 2.00	0.040	0.030	Max 1.00	10.00~ 14.00	16.00~ 18.00	2.00~ 3.00	75,000 (52.7)	30,000 (21.7)	30	50	
A-182	F316L	18Cr-8 Ni Mo-Low	Max 0.035	Max 2.00	0.040	0.030	Max 1.00	10.00~ 15.00	16.00~ 18.00	2.00~ 3.00	65,000 (45.7)	25,000 (17.6)	30	50	
A-182	F321	18Cr-8 Ni Ti	Max 0.08	Max 2.00	0.030	0.030	Max 1.00	9.00~ 12.00	Min 17.00		75,000 (52.7)	30,000 (21.1)	30	50	
A-182	F347	18Cr-8 Ni Cb	Max 0.08	Max 2.00	0.030	0.030	Max 1.00	9.00~ 13.00	17.00~ 20.00		75,000 (52.7)	30,000 (21.1)	30	50	
A-350*	LF1	Carbon Steel	Max 0.30	0.75~ 1.05	0.035	0.040	0.15~ 0.30	Max 0.40	Max 0.30	Max 0.12	60,000~ 85,000 (42.2~59.7)	30,000 (21.1)	25	38	
A-350*	LF2	Carbon Steel	Max 0.30	Max 1.35	0.035	0.040	0.15~ 0.30	Max 0.40	Max 0.30	Max 0.12	70,000~ 95,000 (49.2~66.8)	36,000 (25.3)	22	30	
A-350*	LF3	3½ Ni	Max 0.20	Max 0.90	0.035	0.040	0.20~ 0.35	3.25~ 3.75	Max 0.30	Max 0.12	70,000~ 95,000 (49.2~66.8)	37,500 (26.4)	22	35	

- OTHER ELEMENTS : o pper (0.40% MAX.), Vanadium (0.03% MAX.), Columbium (0.02% MAX.)
- The sum of Cu, Ni, Cr and Mo shall not be e ed 1.00%
- The sum of Cr and Mo shall not be e ed 0.32%

TECHNICAL DATA

Steel Composition	ASTM Specification and Grade				KS Specification and Grade		
	Marking Symbol	Pipe	Plate	Forging	Marking Symbol	Pipe	Plate
Carbon Steel	-	A120	A283-A	-	SPP	SPP	SB41
	-	A53-B	A284	-	PS38(W), PS38, PT38(W), PT38	SPPS38	SWS41B
	-	A53-B	A284	-	PS42(W), PS42, PT42(W), PT42	SPPS42	SWS41B
	-				HT38, HT38(W)	SPHT38	SBB42
	WPB	A106-B	A515-60or70 A516-60or70	A105	HT42, HT42(W)	SPHT42	SBB42
	WPC	A106-C	A516-70 A516-70	A105	HT49, HT49(W)	SPHT49	SBB49
Low Temperature Steel	WPL6	A333 and A334-6	A516-60	A350-LF2	PL39	SPHL39	SLA39
	WPL3	A333 and A334-3	A203-D	A350-LF3	-	-	-
	WPL9	A333 and A334-9	A203-A	A350-LF9	-	-	-
Alloy Steel	WP1	A335-P1	A203-B	A182-F1	PA12, FA12	SPA12	SBB46M
	WP12	A335-P12	A387-12	A182-F12	PA22, FA22	SPA22	SCMV2
	WP11	A335-P11	A387-11	A182-F11	PA23, FA23	SPA23	SCMV3
	WP22	A335-P22	A387-22	A182-F22	PA24, FA24	SPA24	SCMV4
	WP7	A335-P5	A387-5	A182-F5	PA25, FA25	SPA25	SCMV6
	WP5	A335-P7	A387-7	A182-F7	-	-	-
	WP9	A335-P9	A387-9	A182-F9	-	-	-
	WP91	A335-P91	A387-91	A182-F91	-	-	-
Stainless Steel	WP304	A312-TP304	A240-Type304	A182-F304	STS304, STS304W, STS304F	STS304TP	STS304
	WP304H	A312-TP304H	A240-Type304H	A182-F304H	-	-	-
	WP304L	A312-TP304L	A240-Type304L	A182-F304L	STS304L, STS304LW, STS304LF	STS304LTP	STS304L
	WP309	A312-TP309	A240-Type309S	-	STS309S, STS309SW, STS309SF	STS309STP	STS309S
	WP310	A312-TP310	A240-Type310S	A182-F310	STS310S, STS310SW, STS310SF	STS310STP	STS310S
	WP316	A312-TP316	A240-Type316	A182-F316	STS316, STS316W, STS316F	STS316TP	STS316
	WP316H	A312-TP316H	A240-Type316H	A182-F316H	STS316H, STS316HF	STS316HTP	-
	WP316L	A312-TP316L	A240-Type316L	A182-F316L	STS316L, STS316LW, STS316LF	STS316LTP	STS316L
	WP317L	A312-TP317L	A240-Type317L	A182-F317L	STS317L, STS317LW	STS317LTP	STS317L
	WP321	A312-TP321	A240-Type321	A182-F321	STS321, STS321W, STS321F	STS321TP	STS321
	WP321H	A312-TP321H	A240-Type321H	A182-F321H	-	-	-
	WP347	A312-TP347	A240-Type347	A182-F347	STS347, STS347W, STS347F	STS347TP	STS347
	WP347H	A312-TP347H	A240-Type347H	A182-F347H	STS347H, STS347HF	STS347HTP	-

STANDARDS

JIS Specification and Grade			B.S.Specification and Grade	DIN Specification and Grade	Steel Composition
Marking Symbol	Pipe	Plate	Pipe	Pipe	
FSGP or SGP	SGP(STPY400)	SS400	1387-M	2440-ST33-1	Carbon Steel
PG370(W), PS370(W), PT370(W), PT370	STPG370	SM41B	3602-ERW23	1626-ST37	Carbon Steel
PG410(W), PS410(W), PT410(W), PT410	STPG410	SM41B	3602-ERW27	-	Carbon Steel
FS370, PT370(W)	STPT370	SB42	3602-Steel 23	17175-ST35.8	Carbon Steel
FS410, PT410(W)	STPT410	SB42	3602-Steel 27	17175-ST45.8	Carbon Steel
FS480, PT480(W)	STPT480	SB49	3602-Steel 35	-	Carbon Steel
FL380(W)	STPL380	-	3603-Steel 27 LT30	-	Carbon Steel
FL450(W)	STPL450	-	3603-Steel 503 LT100	-	31/2% Ni Steel
FL690(W)	STPL690	-	-	-	2% Ni-1% Cu Steel
PA12(W), FA12	STPA12	-	-	17175-15 Mo3	Carbon-Molybdenum Steel
PA22(W), FA22	STPA22	-	3603-HF620	17175-13 Cr Mo44	1%Cr-1/2%-Molybdenum Steel
PA23(W), FA23	STPA23	-	3603-HF621	-	11/4%Cr-1/2%-Molybdenum Steel
PA24(W), FA24	STPA24	SCMV4	3603-HF622, 27	17175-10 Cr Mo910	21/4%Cr-1%-Molybdenum Steel
PA25(W), FA25	STPA25	-	3603-HF625	-	5%Cr-1/2%-Molybdenum Steel
-	-	-	-	-	7%Cr-1/2%-Molybdenum Steel
PA26(W), FA26	STPA26	-	-	-	9%Cr-1%-Molybdenum Steel
-	-	-	-	-	9%Cr-1% Mo-0.2%V+Cb+N
SUS304, SUS304W, SUS304F	SUS304TP	SUS304	3605-801	17440-X5 Cr Ni189	18% Cr-8% Ni Steel
SUS304H, SUS304HF	SUS304HTP	-	3605-811	-	18% Cr-8% Ni-(0.04-0.10)% C Steel
SUS304L, SUS304LW	SUS304LTP	SUS304L	3605-811L	17440-X2 Cr Ni189	18% Ni-0.035% C Steel
SUS309S, SUS309SW, SUS309SF	SUS309STP	SUS309S	-	-	22% Cr-12% Ni Steel
SUS310S, SUS310SW, SUS310SF	SUS310STP	SUS310S	3605-805S	-	25% Cr-20% Ni Steel
SUS316, SUS316W, SUS316F	SUS316TP	SUS316	3605-845	17440-X5 Cr Ni Mo1810	18% Cr-8% Ni-Mo Steel
SUS316H, SUS316HF	SUS316HTP	-	3605-855	-	18% Cr-8% Ni-Mo(0.04-0.10)% C Steel
SUS316L, SUS316LW	SUS316LTP	SUS316L	3605-845L	17440-X2 Cr Ni Mo1810	18% Cr-8% Ni-Mo-0.035% C Steel
SUS317L	SUS317LTP	SUS317L	-	-	18% Cr-12% Ni-3.5% Mo-Low C
SUS321, SUS321W, SUS321F	SUS321TP	SUS321	3605-822Ti	17440-X10 Cr Ni Ti189	18% Cr-8% Ni-Ti Steel
SUS321H, SUS321HF	SUS321HTP	-	3605-822Ti	-	18% Cr-8% Ni-Ti(0.04-0.10)% C Steel
SUS347, SUS347W, SUS347F	SUS347TP	SUS347	3605-822Nb	17440-X1 Cr Ni Nb189	18% Cr-8% Ni-Cb+Ta Steel
SUS347H, SUS347HF	SUS347HTP	-	3605-832Nb	-	18% Cr-8% Ni-Cb+Ta(0.04-0.10)% C Steel

WALL THICKNESS SCHEDULES

Nominal Pipe		Outside Diameter		Nominal Wall Thickness								
A	B	JIS	ANSI	Sch5S	Sch10S	Sch20S	GS	Sch 10	LG(7.9)	Sch 20	Sch 30	STD
8	¼	13.8	13.7	1.2	1.65	2.0	2.3	–	–	–	–	(2.2)
10	⅜	17.3	17.1	1.2	1.65	2.0	2.3	–	–	–	–	(2.3)
15	½	21.7	21.3	1.65	2.1	2.5	2.8	–	–	–	–	(2.8)
20	¾	27.2	26.7	1.65	2.1	2.5	2.8	–	–	–	–	(2.9)
25	1	34.0	33.4	1.65	2.8	3.0	3.2	–	–	–	–	(3.4)
32	1- ¼	42.7	42.2	1.65	2.8	3.0	3.5	–	–	–	–	(3.6)
40	1- ½	48.6	48.3	1.65	2.8	3.0	3.5	–	–	–	–	(3.7)
50	2	60.5	60.3	1.65	2.8	3.5	3.8	–	–	–	–	(3.9)
65	2- ½	76.3	73.0	2.1	3.0	3.5	4.2	–	–	–	–	(5.2)
80	3	89.1	88.9	2.1	3.0	4.0	4.2	–	–	–	–	(5.5)
90	3- ½	101.6	101.6	2.1	3.0	4.0	4.2	–	–	–	–	(5.7)
100	4	114.3	114.3	2.1	3.0	4.0	4.5	–	–	–	–	(6.0)
125	5	139.8	141.3	2.8	3.4	5.0	4.5	–	–	–	–	(6.6)
150	6	165.2	168.3	2.8	3.4	5.0	5.0	–	5.0**	–	–	(7.1)
175	7	190.7	–	–	–	–	5.3	–	–	–	–	–
200	8	216.3	219.1	2.8	3.8	6.5	5.8	–	5.8**	6.4	7.0	(8.2)
225	9	241.8	–	–	–	–	6.2	–	–	–	–	–
250	10	267.4	273.1	3.4	4.2	6.5	6.6	–	6.6**	6.4	7.8	(9.3)
300	12	318.5	323.9	4.0	4.6	6.5	6.9	–	6.9**	6.4	8.4	9.5
350	14	355.6	355.6	4.0	4.8	7.9	7.9	6.4	7.9	7.9	9.5	9.5
400	16	406.4	406.4	4.2	4.8	7.9	7.9	6.4	7.9	7.9	9.5	9.5
450	18	457.2	457.2	4.2	4.8	7.9	7.9	6.4	7.9	7.9	11.1	9.5
500	20	508.0	508.0	4.8	5.5	7.9	7.9	6.4	7.9	9.5	12.7	9.5
550	22	558.8	558.8	4.8	5.5	–	–	6.4	7.9	9.5	12.7	9.5
600	24	609.6	609.6	5.5	6.4	–	–	6.4	7.9	9.5	14.3	9.5
650	26	660.4	660.4	–	–	–	–	7.9	7.9	12.7	–	9.5
700	28	711.2	711.2	–	–	–	–	7.9	7.9	12.7	15.9	9.5
750	30	762.0	762.0	6.4	7.9	–	–	7.9	7.9	12.7	15.9	9.5
800	32	812.8	812.8	–	–	–	–	7.9	7.9	12.7	15.9	9.5
850	34	863.6	863.6	–	–	–	–	7.9	7.9	12.7	15.9	9.5
900	36	914.4	914.4	–	–	–	–	7.9	7.9	12.7	15.9	9.5
950	38	965.2	965.2	–	–	–	–	–	7.9	–	–	9.5
1000	40	1016.0	1016.0	–	–	–	–	–	7.9	–	–	9.5
1050	42	1066.8	1066.8	–	–	–	–	–	7.9	–	–	9.5
1100	44	1117.6	1117.6	–	–	–	–	–	7.9	–	–	9.5
1150	46	1168.4	1168.4	–	–	–	–	–	7.9	–	–	9.5
1200	48	1219.2	1219.2	–	–	–	–	–	7.9	–	–	9.5
1250	50	1270.0	1270.0	–	–	–	–	–	*7.9	–	–	*9.5
1300	52	1320.8	1320.8	–	–	–	–	–	*7.9	–	–	*9.5
1350	54	1371.6	1371.6	–	–	–	–	–	*7.9	–	–	*9.5
1400	56	1422.4	1422.4	–	–	–	–	–	*7.9	–	–	*9.5
1450	58	1473.2	1473.2	–	–	–	–	–	*7.9	–	–	*9.5
1500	60	1524.0	1524.0	–	–	–	–	–	*7.9	–	–	*9.5

WALL THICKNESS SCHEDULES

JIS G3448 ASME B36.10M
JIS G3454 ASME B36.19M
JIS G3455
JIS G3459

(unit : mm)

Nominal Wall Thickness									Outside Diameter		Nominal Pipe	
Sch40	Sch60	XS	Sch80	Sch100	Sch120	Sch140	Sch160	XXS	JIS	ANSI	A	B
2.2	2.4	(3.0)	3.0	–	–	–	–	–	13.8	13.7	8	¼
2.3	2.8	(3.2)	3.2	–	–	–	–	–	17.3	17.1	10	⅜
2.8	3.2	(3.7)	3.7	–	–	–	4.7	7.5	21.7	21.3	15	½
2.9	3.4	(3.9)	3.9	–	–	–	5.5	7.8	27.2	26.7	20	¾
3.4	3.9	(4.5)	4.5	–	–	–	6.4	9.1	34.0	33.5	25	1
3.6	4.5	(4.9)	4.9	–	–	–	6.4	9.7	42.7	42.2	32	1- ¼
3.7	4.5	(5.1)	5.1	–	–	–	7.1	10.2	48.6	48.3	40	1- ½
3.9	4.9	(5.5)	5.5	–	–	–	8.7	11.1	60.5	60.3	50	2
5.2	6.0	(7.0)	7.0	–	–	–	9.5	14.0	76.3	73.0	65	2- ½
5.5	6.6	(7.6)	7.6	–	–	–	11.1	15.2	89.1	88.9	80	3
5.7	7.0	(8.1)	8.1	–	–	–	12.7	–	101.6	101.6	90	3- ½
6.0	7.1	(8.6)	8.6	–	11.1	–	13.5	17.1	114.3	114.3	100	4
6.6	8.1	(9.5)	9.5	–	12.7	–	15.9	19.0	139.8	141.3	125	5
7.1	9.3	(11.0)	11.0	–	14.3	–	18.2	21.9	165.2	168.3	150	6
–	–	–	–	–	–	–	–	–	190.7	–	175	7
8.2	10.3	(12.7)	12.7	15.1	18.2	20.6	23.0	22.2	216.3	219.1	200	8
–	–	–	–	–	–	–	–	–	241.8	–	225	9
9.3	12.7	12.7	15.1	18.3	21.4	25.4	28.6	25.4	267.4	273.1	250	10
10.3	14.3	12.7	17.4	21.4	25.4	28.6	33.3	25.4	318.5	323.9	300	12
11.1	15.1	12.7	19.0	23.8	27.8	31.8	35.7	–	355.6	355.6	350	14
12.7	16.7	12.7	21.4	26.2	30.9	36.5	40.5	–	406.4	406.4	400	16
14.3	19.0	12.7	23.8	29.4	34.9	39.7	45.2	–	457.2	457.2	450	18
15.1	20.6	12.7	26.2	32.5	38.1	44.4	50.0	–	508.0	508.0	500	20
–	22.2	12.7	28.6	34.9	41.3	47.6	54.0	–	558.8	558.8	550	22
17.5	24.6	12.7	31.0	38.9	46.0	52.4	59.5	–	609.6	609.6	600	24
–	–	12.7	–	–	–	–	–	–	660.4	660.4	650	26
–	–	12.7	–	–	–	–	–	–	711.2	711.2	700	28
–	–	12.7	–	–	–	–	–	–	762.0	762.0	750	30
17.5	–	12.7	–	–	–	–	–	–	812.8	812.8	800	32
17.5	–	12.7	–	–	–	–	–	–	863.6	863.6	850	34
19.1	–	12.7	–	–	–	–	–	–	914.4	914.4	900	36
–	–	12.7	–	–	–	–	–	–	965.2	965.2	950	38
–	–	12.7	–	–	–	–	–	–	1016.0	1016.0	1000	40
–	–	12.7	–	–	–	–	–	–	1066.8	1066.8	1050	42
–	–	12.7	–	–	–	–	–	–	1117.6	1117.6	1100	44
–	–	12.7	–	–	–	–	–	–	1168.4	1168.4	1150	46
–	–	12.7	–	–	–	–	–	–	1219.2	1219.2	1200	48
–	–	*12.7	–	–	–	–	–	–	1270.0	1270.0	1250	50
–	–	*12.7	–	–	–	–	–	–	1320.8	1320.8	1300	52
–	–	*12.7	–	–	–	–	–	–	1371.6	1371.6	1350	54
–	–	*12.7	–	–	–	–	–	–	1422.4	1422.4	1400	56
–	–	*12.7	–	–	–	–	–	–	1473.2	1473.2	1450	58
–	–	*12.7	–	–	–	–	–	–	1524.0	1524.0	1500	60

ANSI Flanges

Section

Flanges

This section contains extracts from American and British specifications applicable to stainless steel flanges.

Specifications covered in this Section	Page
ASME B16.5-1996 - Pipe Flanges and Flanged Fittings through NP 24	237 (general) 11 to 46
ASME B16.47-1996 - Large Diameter Steel Flanges NPS 26 through NPS 60 (Covers MSS SP-44 and API 605 flanges)	241-237 (general) 279 to 287
MSS SP-44 1996 - Edition, Steel Pipeline Flanges (Covered by ASME B16.47-1996 Series A)	47 to 51
API Standard 605 - Cancelled (Covered by ASME B16.47-1996 Series B)	284 to 287
BS 10 : 1962 - Specification for Flanges and Bolting for Pipes, Valves, and Fittings	304
BS 3293 : 1960 (incorporating amendment 1972) - Specification for Carbon Steel Pipe Flanges (over 24 inches nominal size) for the Petroleum Industry	288
BS 4504 : Section 3.1 : 1989 (incorporating amendments) - Circular Flanges for Pipes, Valves and Fittings (PN designated), Section 3.1 Specification for Steel Flanges	293
ISO 7005-1 : 1992 (E), Metallic Flanges - Part 1: Steel Flanges (this is substantially the same as BS 4504)	293

Flanges - General Information

A Flange is a method of connecting pipes, valves, pumps and other equipment to form a pipework system. It also provides easy access for cleaning, inspection or modification. Flanges are usually welded or screwed into such systems and then joined with bolts.

Flange Types

Weld Neck

This flange is circumferentially welded into the system at its neck which means that the integrity of the butt welded area can be easily examined by radiography. The bores of both pipe and flange match, which reduces turbulence and erosion inside the pipeline. The weld neck is therefore favoured in critical applications

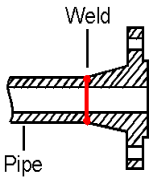

Weld Neck

Slip-on

This flange is slipped over the pipe and then fillet welded. Slip-on flanges are easy to use in fabricated applications.

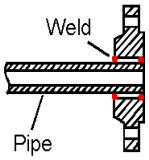

Slip On

Blind

This flange is used to blank off pipelines, valves and pumps, it can also be used as an inspection cover. It is sometimes referred to as a blanking flange.

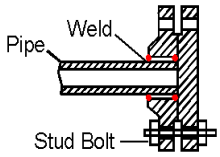

Blind

Socket Weld

This flange is counter bored to accept the pipe before being fillet welded. The bore of the pipe and flange are both the same therefore giving good flow characteristics.

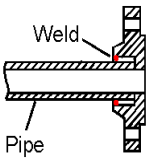

Socket Weld

Threaded

This flange is referred to as either threaded or screwed. It is used to connect other threaded components in low pressure, non-critical applications. No welding is required.

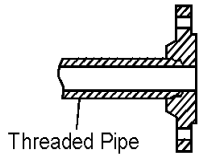

Threaded

Lap Joint

These flanges are always used with either a stub end or taft which is butt welded to the pipe with the flange loose behind it. This means the stub end or taft always makes the face. The lap joint is favoured in low pressure applications because it is easily assembled and aligned. To reduce cost these flanges can be supplied without a hub and/or in treated, coated carbon steel.

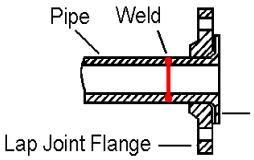

Lap Joint

Ring Type Joint

This is a method of ensuring leak proof flange connection at high pressures. A metal ring is compressed into a hexagonal groove on the face of the flange to make the seal. This jointing method can be employed on Weld Neck, Slip-on and Blind Flanges.

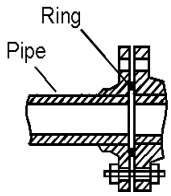

Ring Type Joint

Flanges - General Information

Specifications

Refer to page 8-1 for a list of flange specifications (with page references) covered in this Section.

Manufacture

Summary of materials used for flanges

	ASME/ ANSI B16.5	ASME B16.47 Series A (or MSS SP-44[1])	ASME B16.47 Series B (or API 605[2])	BS 4504	BS 3293	BS 10[3]
Forging (ASTM A 182)	✔	✔	✔	✔	✔	✔
Plate (ASTM A 240)[4]	✔			✔		✔
Bar[5]						✔
Casting[6]	✔			✔		✔

Notes
1 MSS SP-44 flanges are designated Series A flanges in ASME B16.47.
2 API 605 has been cancelled. API 605 flanges are designated Series B flanges in ASME B16.47.
3 BS 10, although obsolete, remains in use for light weight economy stainless steel flanges.
4 Within specification ANSI B16.5, plate can only be used to provide blind flanges.
5 Most small BS 10 flanges are made from bar.
6 Castings are not included in this manual.

- **Materials**. Most standards specify the material from which the flange is produced. The purchaser should specify the exact requirements.
- **Flange Sizes**. All sizes and grades compatible to standard pipe ranges and wall thicknesses (pressure ratings) are available. The table below provides a summary.
- **Flange Face**. There are various face configurations for flanges. Typically: flat face, raised face, tongue and groove, ring joint.
- **Face Finish**. The finish on the face of a flange is measured as an Arithmetical Average Roughness Height (AARH). The finish is determined by the standard used. For example, ANSI B16.5 specifies face finishes within a range 125AARH - 500AARH (3.2 Ra to 12.5 Ra). Other finishes are available on request, for example 1.6 Ra max, 1.6/3.2 Ra, 3.2/6.3 Ra or 6.3/12.5 Ra. The range 3.2/6.3 Ra is most common.

Summary of flange sizes specified by common standards

Flange Type	Specifications				
	ASME/ANSI B16.5	ASME B16.47 Series A (or MSS SP-44[1])	ASME B16.47 Series B (or API 605[2])	BS 4504 (ISO 7005-1)	BS 3293
	Nominal Pipe Sizes				
	< NPS 26	≥NPS 26	≥NPS 26	DN 10 to DN 4000	≥ NPS 26
	Nominal Pressure (Class)				
	Class (lb)	Class (lb)	Class (lb)	PN (bar)	Class (lb)
Weld Neck	150-2500	150-900	75-900	2.5-40	150-600
Slip-on	150-1500	-	-	2.5-40	150-600
Blind	150-2500	300-900	300-900	2.5-40	-
Lap Joint	150-2500	-	-	6-40[3]	-
Socket Weld	150-1500	-	-	N/A	-
Threaded	150-2500	-	-	6-40	-
Flat/Raised Facings	As above	As above	As above	As above	As above
Ring Joint Facings	150-2500	300-900	300-900	2.5-40	300-600
Other Facings	150-2500[3]	-	-	2.5-40	-

Notes
1 MSS SP-44 flanges are designated Series A flanges in ASME B16.47. It also covers flanges in the range NPS 12 to 24, these being equivalent to ASME/ANSI B16.5 flanges in the same range (except for the addition of NPS 22 in MSS SP-44).
2 API 605 has been cancelled. API 605 flanges are designated Series B flanges in ASME B16.47. Ranges quoted are based on ASME B16.47 Series B.
3 Dimensions not covered in this summary.

ASME/ANSI B16.5-1996 and B16.47-1996

American national standards ASME/ANSI B16.5 and B16.47 together cover pipe flanges up to NPS 60 (NPS 48 is the largest detailed in this summary). ASME/ANSI B16.47 covers two series of flanges, Series A which is equivalent to MSS SP-44 (the 1996 Edition of MSS SP-44 complies with B16.47 tolerances), and Series B which is equivalent to API 605 (API 605 is now cancelled).

Dimensions and Tolerances

Tolerances on flange dimensions (ASME/ANSI B16.5 and B16.47, and MSS SP-44)

Dimension	Range	Tolerance	
		in	mm
General and Blind Flanges (For blind flange dimensions see page 8-23 for B16.5, page 8-46 for B16.47 Series A / MSS SP-44 and page 8-51 for B16.47 Series B / API 605):			
G (raised face diameter)	≤ NPS 24	±0.03	±0.76
	≥ NPS 26, with 0.06 in raised face	±0.08	±2.03
	≥ NPS 26, with 0.25 in raised face	±0.04	±1.02
I (bolt hole diameter)	All	No tolerance in B16.5 or B16.47	
J (bolt circle diameter)	All	±0.06	±1.52
Centre to centre of adjacent bolt holes	All	±0.03	±0.76
Eccenticity of bolt circle and machined facing diameters	≤ NPS 2 1/2	±0.03	±0.76
	≥ NPS 3	±0.06	±1.52
Weld Neck Flanges[1] (For dimensions see page 8-10 for B16.5, page 8-46 for B16.47 Series A / MSS SP-44 and page 8-51 for B16.47 Series B / API 605):			
D (overall length)	≤ NPS 4	+0.06	+1.52
	NPS 5 to 10	+0.06, -0.12	+1.52, -3.05
	NPS 12 to 24	+0.12, -0.18	+3.05, -4.57
	≥ NPS 26	±0.19	±4.83
Thickness of hub	All	> 87.5% of pipe nominal wall thickness	
Slip on (see page 8-17), Lap Joint (see page 8-32 for dimensions) and Socket Welding (see page 8-30 for dimensions) Flanges:			
B (inside diameter, or bore)	≤ NPS 10	+0.03, -0.0	+0.76, -0.0
	≥ NPS 12	+0.06, -0.0	+1.52, -0.0
Threaded Flanges (see page 8-40 for dimensions):			
B (counterbore) (Not applicable for Class 150 lb)	≤ NPS 10	+0.03, -0.0	+0.76, -0.0
	≥ NPS 12	+0.06, -0.0	+1.52, -0.0
Ring Joint Facing (See page 8-6 for dimensions; see page 8-9 for tolerances)			

Note
1 See page 8-5 for weld neck welding end dimension and tolerance data.

General - ASME/ANSI B16.5 & B16.47

Weld Neck Flanges - Welding Ends

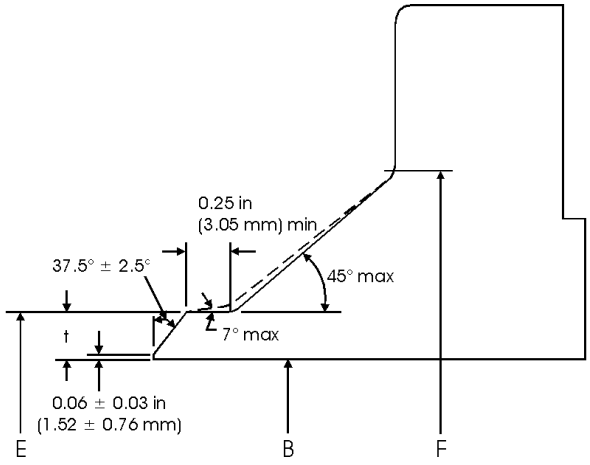

ASME/ANSI B16.5 (NPS 1/2 to 24) Weld Neck Flange Bevel (with no backing ring) for Wall Thicknesses (t) from 0.19 to 0.88 in (4.83 to 22.35 mm).

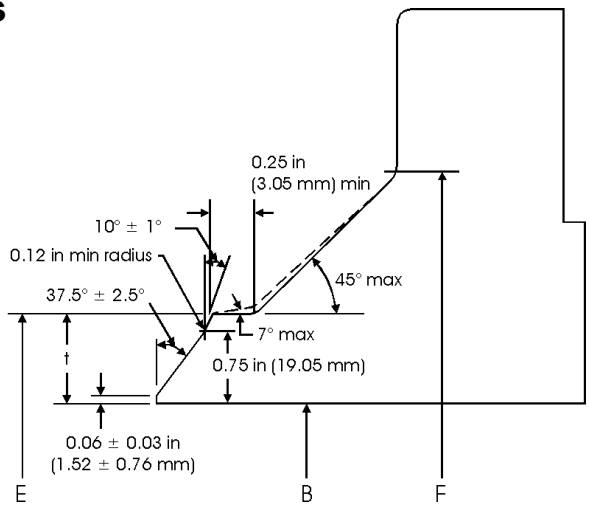

ASME/ANSI B16.5 (NPS 1/2 to 24) Weld Neck Flange Bevel (with no backing ring) for Wall Thicknesses (t) >0.88 in (22.35 mm).

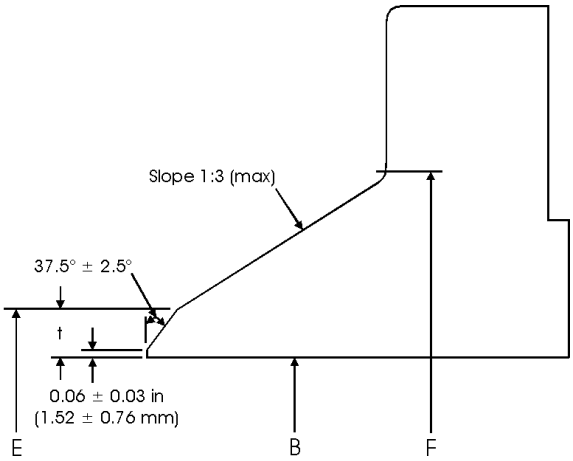

ASME B16.47 and MSS SP-44 (>NPS 24) Weld Neck Flange Bevel (with no backing ring) for Wall Thickness (t) = 0.19 to 0.88 in (4.83 to 22.35 mm).

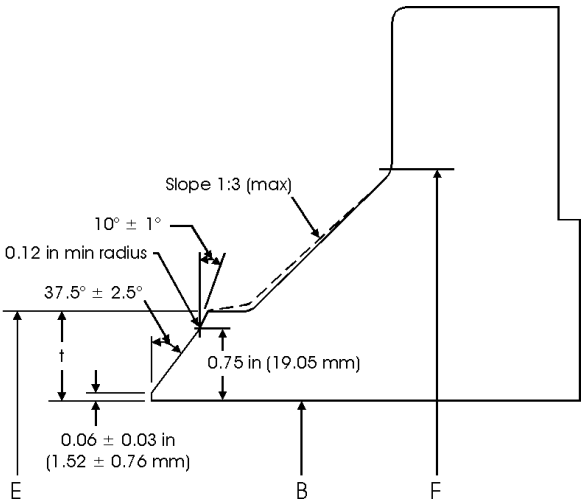

ASME B16.47 and MSS SP-44 (>NPS 24) Weld Neck Flange Bevel (with no backing ring) for Wall Thicknesses (t) > 0.88 in (22.35 mm).

Tolerances on welding end dimensions (ASME/ANSI B16.5 and B16.47, and MSS SP-44)

Dimension	Range	Tolerance	
		in	mm
E (outside diameter at welding end)	–		
	–		
B (inside diameter of flange)	B ≤ NPS 10	±0.03	±0.76
	B > NPS 12 to 18	+/-0.03	±0.76
	B > NPS 20	+0.12, -0.06	+3.05, -1.52
t (thickness at weld bevel)	All	>87.5%	

Note

- t = Nominal wall thickness of the pipe. Additional thickness at the weld bevel (up to 0.5 x t) may be provided on the inside or outside diameter (or partially on both) of the hub if it is used with light walled higher strength pipe. Hub diameter, F, may also be increased.

Ring Joint Facings - ASME/ANSI B16.5 & B16.47

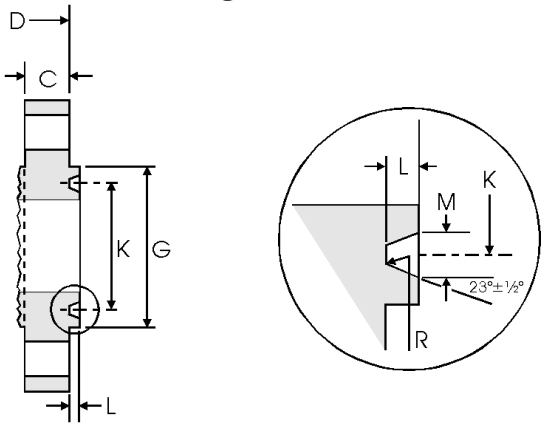

Note
- Values for minimum flange thickness, C, and overall length, D, are detailed in the flange tables.
- For ring joint tolerances see page 8-9.

Ring joint facing dimensions - ASME/ANSI B16.5 and B16.47 Series A (MSS SP-44) and Series B (API 605)

Class (lb)							Groove/Ring Number	Raised Face	Groove			
150	300	400	600	900	1500	2500		G	K	L	M	R
Nominal Pipe Size (NPS)								Face Diameter min	Pitch Diameter	Depth[1]	Width	Radius at Bottom
								in mm	in mm	in mm	in mm	in mm
ASME/ANSI B16.5 covers NPS 1/2 to 24:												
	1/2	Use Class 600 for sizes ≤ 3 1/2	1/2	Use Class 1500 for sizes ≤ 2 1/2			R11	2.000 50.80	1.344 34.14	0.219 5.56	0.281 7.14	0.03 0.76
					1/2		R12	2.380 60.45	1.562 39.67	0.250 6.35	0.344 8.74	0.03 0.76
	3/4		3/4				R13	2.500 63.50	1.688 42.88	0.250 6.35	0.344 8.74	0.03 0.76
						1/2	R13	2.560 65.02	1.688 42.88	0.250 6.35	0.344 8.74	0.03 0.76
					3/4		R14	2.620 66.55	1.750 44.45	0.250 6.35	0.344 8.74	0.03 0.76
1							R15	2.500 63.50	1.875 47.63	0.250 6.35	0.344 8.74	0.03 0.76
	1		1				R16	2.750 69.85	2.000 50.80	0.250 6.35	0.344 8.74	0.03 0.76
					1		R16	2.810 71.37	2.000 50.80	0.250 6.35	0.344 8.74	0.03 0.76
						3/4	R16	2.880 73.15	2.000 50.80	0.250 6.35	0.344 8.74	0.03 0.76
1 1/4							R17	2.880 73.15	2.250 57.15	0.250 6.35	0.344 8.74	0.03 0.76
	1 1/4		1 1/4				R18	3.120 79.25	2.375 60.33	0.250 6.35	0.344 8.74	0.03 0.76
					1 1/4		R18	3.190 81.03	2.375 60.33	0.250 6.35	0.344 8.74	0.03 0.76
						1	R18	3.250 82.55	2.375 60.33	0.250 6.35	0.344 8.74	0.03 0.76
1 1/2							R19	3.250 82.55	2.562 65.07	0.250 6.35	0.344 8.74	0.03 0.76
	1 1/2		1 1/2				R20	3.560 90.42	2.688 68.28	0.250 6.35	0.344 8.74	0.03 0.76
					1 1/2		R20	3.620 91.95	2.688 68.28	0.250 6.35	0.344 8.74	0.03 0.76
						1 1/4	R21	4.000 101.60	2.844 72.24	0.312 7.92	0.469 11.91	0.03 0.76
2							R22	4.000 101.60	3.250 82.55	0.250 6.35	0.344 8.74	0.03 0.76
	2		2				R23	4.250 107.95	3.250 82.55	0.312 7.92	0.469 11.91	0.03 0.76
						1 1/2	R23	4.500 114.30	3.250 82.55	0.312 7.92	0.469 11.91	0.03 0.76
					2		R24	4.880 123.95	3.750 95.25	0.312 7.92	0.469 11.91	0.03 0.76
2 1/2							R25	4.750 120.65	4.000 101.60	0.250 6.35	0.344 8.74	0.03 0.76
	2 1/2		2 1/2				R26	5.000 127.00	4.000 101.60	0.312 7.92	0.469 11.91	0.03 0.76
						2	R26	5.250 133.35	4.000 101.60	0.312 7.92	0.469 11.91	0.03 0.76

Ring Joint Facings - ASME/ANSI B16.5 & B16.47

Ring joint facing dimensions - ASME/ANSI B16.5 and B16.47 Series A (MSS SP-44) and Series B (API 605) (Continued)

Class (lb)							Groove/Ring Number	Raised Face	Groove			
150	300	400	600	900	1500	2500		G	K	L	M	R
Nominal Pipe Size (NPS)								Face Diameter min	Pitch Diameter	Depth[1]	Width	Radius at Bottom
								in mm	in mm	in mm	in mm	in mm
		Use Class 600 for sizes < 3 1/2			2 1/2		R27	5.380 136.65	4.250 107.95	0.31 27.92	0.469 11.91	0.03 0.76
						2 1/2	R28	5.880 149.35	4.37511 1.13	0.375 9.53	0.531 13.49	0.06 1.52
3							R29	5.250 133.35	4.500 114.30	0.250 6.35	0.344 8.74	0.03 0.76
	-[2]		-[2]				R30	-	4.625 117.48	0.312 7.92	0.469 11.91	0.03 0.76
	3[2]		3[2]				R31	5.750 146.05	4.875 123.83	0.312 7.92	0.469 11.91	0.03 0.76
				3			R31	6.120 155.45	4.875 123.83	0.312 7.92	0.469 11.91	0.03 0.76
						3	R32	6.620 168.15	5.000 127.00	0.375 9.53	0.531 13.49	0.06 1.52
3 1/2							R33	6.060 153.92	5.188 131.78	0.250 6.35	0.344 8.74	0.03 0.76
	3 1/2		3 1/2				R34	6.250 158.75	5.188 131.78	0.312 7.92	0.469 11.91	0.03 0.76
					3		R35	6.620 168.15	5.375 136.53	0.312 7.92	0.469 11.91	0.03 0.76
4							R36	6.750 171.45	5.875 149.23	0.250 6.35	0.344 8.74	0.03 0.76
	4	4	4				R37	6.880 174.75	5.875 149.23	0.312 7.92	0.469 11.91	0.03 0.76
				4			R37	7.120 180.85	5.875 149.23	0.312 7.92	0.469 11.91	0.03 0.76
						4	R38	8.000 203.20	6.1881 57.18	0.438 11.13	0.656 16.66	0.06 1.52
					4		R39	7.620 193.55	6.375 161.93	0.312 7.92	0.469 11.91	0.03 0.76
5							R40	7.620 193.55	6.750 171.45	0.250 6.35	0.344 8.74	0.03 0.76
	5	5	5				R41	8.250 209.55	7.125 180.98	0.312 7.92	0.469 11.91	0.03 0.76
				5			R41	8.500 215.90	7.125 180.98	0.312 7.92	0.469 11.91	0.03 0.76
						5	R42	9.500 241.30	7.500 190.50	0.500 12.70	0.781 19.84	0.06 1.52
6							R43	8.620 218.95	7.625 193.68	0.250 6.35	0.344 8.74	0.03 0.76
					5		R44	9.000 228.60	7.625 193.68	0.312 7.92	0.469 11.91	0.03 0.76
	6	6	6				R45	9.500 241.30	8.312 211.12	0.312 7.92	0.469 11.91	0.03 0.76
				6			R45	9.500 241.30	8.312 211.12	0.312 7.92	0.469 11.91	0.03 0.76
					6		R46	9.750 247.65	8.312 211.12	0.375 9.53	0.531 13.49	0.06 1.52
						6	R47	11.000 279.40	9.000 228.60	0.500 12.70	0.781 19.84	0.06 1.52
8							R48	10.750 273.05	9.750 247.65	0.250 6.35	0.344 8.74	0.03 0.76
	8	8	8				R49	11.880 301.75	10.625 269.88	0.312 7.92	0.469 11.91	0.03 0.76
				8			R49	12.120 307.85	10.625 269.88	0.312 7.92	0.469 11.91	0.03 0.76
					8		R50	12.500 317.50	10.625 269.88	0.438 11.13	0.656 16.66	0.06 1.52
						8	R51	13.380 339.85	11.000 279.40	0.562 14.27	0.906 23.01	0.06 1.52
10							R52	13.000 330.20	12.000 304.80	0.250 6.35	0.344 8.74	0.03 0.76
	10	10	10				R53	14.000 355.60	12.750 323.85	0.312 7.92	0.469 11.91	0.03 0.76
				10			R53	14.250 361.95	12.750 323.85	0.312 7.92	0.469 11.91	0.03 0.76
					10		R54	14.620 371.35	12.750 323.85	0.438 11.13	0.656 16.66	0.06 1.52

Ring Joint Facings - ASME/ANSI B16.5 & B16.47

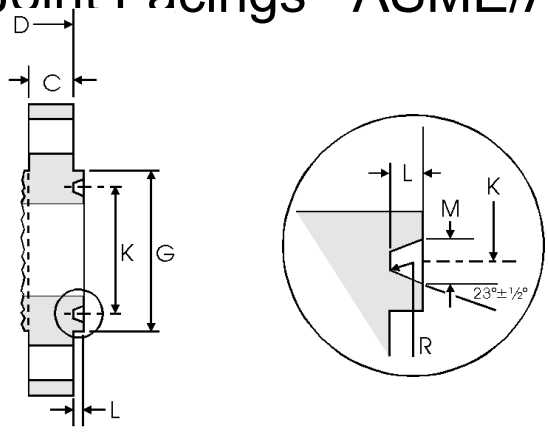

Note
- Values for minimum flange thickness, C, and overall length, D, are detailed in the flange tables.
- For ring joint tolerances see page 8-9.

Ring joint facing dimensions - ASME/ANSI B16.5 and B16.47 Series A (MSS SP-44) and Series B (API 605) (Continued)

Class (lb)							Groove/Ring Number	Raised Face	Groove			
150	300	400	600	900	1500	2500		G	K	L	M	R
Nominal Pipe Size (NPS)								Face Diameter min in mm	Pitch Diameter in mm	Depth[1] in mm	Width in mm	Radius at Bottom in mm
						10	R55	16.750 425.45	13.500 342.90	0.688 17.48	1.188 30.18	0.09 2.29
12							R56	16.000 406.40	15.000 381.00	0.250 6.35	0.344 8.74	0.03 0.76
	12	12	12				R57	16.250 412.75	15.000 381.00	0.312 7.92	0.469 11.91	0.03 0.76
				12			R57	16.500 419.10	15.000 381.00	0.312 7.92	0.469 11.91	0.03 0.76
					12		R58	17.250 438.15	15.000 381.00	0.562 14.27	0.906 23.01	0.06 1.52
14							R59	16.750 425.45	15.625 396.88	0.250 6.35	0.344 8.74	0.03 0.76
						12	R60	19.500 495.30	16.000 406.40	0.688 17.48	1.312 33.32	0.09 2.29
	14	14	14				R61	18.000 457.20	16.500 419.10	0.312 7.92	0.469 11.91	0.03 0.76
				14			R62	18.380 466.85	16.500 419.10	0.438 11.13	0.656 16.66	0.06 1.52
					14		R63	19.250 488.95	16.500 419.10	0.625 15.88	1.062 26.97	0.09 2.29
16							R64	19.000 482.60	17.875 454.03	0.250 6.35	0.344 8.74	0.03 0.76
	16	16	16				R65	20.000 508.00	18.500 469.90	0.312 7.92	0.469 11.91	0.03 0.76
				16			R66	20.620 523.75	18.500 469.90	0.438 11.13	0.656 16.66	0.06 1.52
					16		R67	21.500 546.10	18.500 469.90	0.688 17.48	1.188 30.18	0.09 2.29
18							R68	21.500 546.10	20.375 517.53	0.250 6.35	0.344 8.74	0.03 0.76
	18	18	18				R69	22.620 574.55	21.000 533.40	0.312 7.92	0.469 11.91	0.03 0.76
				18			R70	23.380 593.85	21.000 533.40	0.500 12.70	0.781 19.84	0.06 1.52
					18		R71	24.120 612.65	21.000 533.40	0.688 17.48	1.188 30.18	0.09 2.29
20							R72	23.500 596.90	22.000 558.80	0.250 6.35	0.344 8.74	0.03 0.76
	20	20	20				R73	25.000 635.00	23.000 584.20	0.375 9.53	0.531 13.49	0.06 1.52
				20			R74	25.500 647.70	23.000 584.20	0.500 12.70	0.781 19.84	0.06 1.52
					20		R75	26.500 673.10	23.000 584.20	0.688 17.48	1.312 33.32	0.09 2.29
24							R76	28.000 711.20	26.500 673.10	0.250 6.35	0.344 8.74	0.03 0.76
	24	24	24				R77	29.500 749.30	27.250 692.15	0.438 11.13	0.656 16.66	0.06 1.52
				24			R78	30.380 771.65	27.250 692.15	0.625 15.88	1.062 26.97	0.09 2.29

Ring Joint Facings - ASME/ANSI B16.5 & B16.47

Ring joint facing dimensions - ASME/ANSI B16.5 and B16.47 Series A (MSS SP-44) and Series B (API 605) (Continued)

Class (lb)							Groove/Ring Number	Raised Face	Groove			
150	300	400	600	900	1500	2500		G	K	L	M	R
Nominal Pipe Size (NPS)								Face Diameter min	Pitch Diameter	Depth[1]	Width	Radius at Bottom
								in mm	in mm	in mm	in mm	in mm
					24		R79	31.250 793.75	27.250 692.15	0.812 20.62	1.438 36.53	0.09 2.29
MSS SP-44 only, covers NPS 22:												
	22	22	22				R81	27.000 685.80	25.000 635.00	0.438 11.13	0.594 15.09	0.06 1.52
ASME/ANSI B16.47 (MSS SP-44 & API 605) covers NPS 26 to 36. (There are no ring joint facings >NPS 36)												
	26	26	26				R93	31.880 809.75	29.500 749.30	0.500 12.70	0.781 19.84	0.06 1.52
	28	28	28				R94	33.880 860.55	31.500 800.10	0.500 12.70	0.781 19.84	0.06 1.52
	30	30	30				R95	36.120 917.45	33.750 857.25	0.500 12.70	0.781 19.84	0.06 1.52
	32	32	32				R96	38.750 984.25	36.000 914.40	0.562 14.27	0.906 23.01	0.06 1.52
	34	34	34				R97	40.750 1035.1	38.000 965.20	0.562 14.27	0.906 23.01	0.06 1.52
	36	36	36				R98	43.000 1092.2	40.250 1022.4	0.562 14.27	0.906 23.01	0.06 1.52
				26			R100	32.750 831.85	29.500 749.30	0.688 17.48	1.188 30.18	0.09 2.29
				28			R101	35.000 889.00	31.500 800.10	0.688 17.48	1.312 33.32	0.09 2.29
				30			R102	37.250 946.15	33.750 857.25	0.688 17.48	1.312 33.32	0.09 2.29
				32			R103	39.500 1003.3	36.000 914.40	0.688 17.48	1.312 33.32	0.09 2.29
				34			R104	42.000 1066.8	38.000 965.20	0.812 20.62	1.438 36.53	0.09 2.29
				36			R105	44.250 1124.0	40.250 1022.4	0.812 20.62	1.438 36.53	0.09 2.29

Notes
- Ring joint gasket dimensions conform to ASME B16.20 (not covered in this summary).
- Use Class 600 lb in sizes NPS $^1/_2$ to NPS $3^1/_2$ for Class 400 lb.
- Use Class 1500 lb in sizes NPS $^1/_2$ to NPS $2^1/_2$ for Class 900 lb.
- Tolerances are as shown in the table below.

1 The height of the raised portion is equal to the depth of groove dimension L, but is not subject to the tolerances for L.
2 Ring joints with lapped flanges in Classes 300 lb and 600 lb use R30 instead of R31.

Ring joint facing tolerances (ASME/ANSI B16.5 and B16.47)

Dimension	Range	Tolerance	
		in	mm
L (depth)	All	+0.016, -0	+0.406, -0
M (width)	All	±0.008	±0.203
K (pitch diameter)	All	±0.005	±0.127
R (radius at bottom)	R ≤ 0.06 in	+0.03, -0	+0.762, -0
	R > 0.06 in	±0.03	±0.762
	≥ NPS 26	maximum quoted	
D (overall length) for flanges with ring joint	≤ NPS 10	±0.06	±1.52
	≥ NPS 12	±0.12	±3.05

Weld Neck Flanges - ANSI B16.5

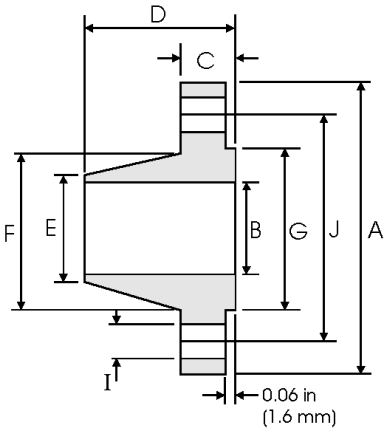

Class 150 lb

Pipe		Flange Data				Hub Data		Raised Face	Drilling Data			Weight
Nominal Pipe Size		A	B	C	D	E	F	G	H	I	J	
	Outside Diameter	Overall Diameter	Inside Diameter	Flange Thickness min	Overall Length	Diameter at Weld Bevel	Hub Diameter	Face Diameter	Number of Holes	Bolt Hole Diameter	Diameter of Circle of Holes	kg/ piece
	in mm		in mm	in mm	in mm	in mm	in mm	in mm		in mm	in mm	
1/2	0.840 21.30	3.500 88.90	0.620 15.70	0.440 11.20	1.880 47.80	0.840 21.30	1.190 30.20	1.380 35.00	4	0.620 15.70	2.380 60.45	0.48
3/4	1.050 26.70	3.880 98.60	0.820 20.80	0.500 12.70	2.060 52.30	1.050 26.70	1.500 38.10	1.690 42.90	4	0.620 15.70	2.750 69.85	0.71
1	1.315 33.40	4.250 108.0	1.050 26.70	0.560 14.20	2.190 55.60	1.320 33.50	1.940 49.30	2.000 50.80	4	0.620 15.70	3.120 79.25	1.01
1 1/4	1.660 42.20	4.620 117.3	1.380 35.10	0.620 15.70	2.250 57.15	1.660 42.20	2.310 58.70	2.500 63.50	4	0.620 15.70	3.500 88.90	1.33
1 1/2	1.900 48.30	5.000 127.0	1.610 40.90	0.690 17.50	2.440 62.00	1.900 48.30	2.560 65.00	2.880 73.15	4	0.620 15.70	3.880 98.60	1.72
2	2.375 60.30	6.000 152.4	2.070 52.60	0.750 19.10	2.500 63.50	2.380 60.45	3.060 77.70	3.620 91.90	4	0.750 19.10	4.750 120.7	2.58
2 1/2	2.875 73.00	7.000 177.8	2.470 62.70	0.880 22.40	2.750 69.85	2.880 73.15	3.560 90.40	4.120 104.6	4	0.750 19.10	5.500 139.7	4.11
3	3.500 88.90	7.500 190.5	3.070 78.00	0.940 23.90	2.750 69.85	3.500 88.90	4.250 108.0	5.000 127.0	4	0.750 19.10	6.000 152.4	4.92
3 1/2	4.000 101.6	8.500 215.9	3.550 90.20	0.940 23.90	2.810 71.40	4.000 101.6	4.810 122.2	5.500 139.7	8	0.750 19.10	7.000 177.8	6.08
4	4.500 114.3	9.000 228.6	4.030 102.4	0.940 23.90	3.000 76.20	4.500 114.3	5.310 134.9	6.190 157.2	8	0.750 19.10	7.500 190.5	6.84
5	5.563 141.3	10.00 254.0	5.050 128.3	0.940 23.90	3.500 88.90	5.560 141.2	6.440 163.6	7.310 185.7	8	0.880 22.40	8.500 215.9	8.56
6	6.625 168.3	11.00 279.4	6.070 154.2	1.000 25.40	3.500 88.90	6.630 168.4	7.560 192.0	8.500 215.9	8	0.880 22.40	9.500 241.3	10.6
8	8.625 219.1	13.50 342.9	7.980 202.7	1.120 28.40	4.000 101.6	8.630 219.2	9.690 246.1	10.62 269.7	8	0.880 22.40	11.75 298.5	17.6
10	10.75 273.0	16.00 406.4	10.02 254.5	1.190 30.20	4.000 101.6	10.75 273.0	12.00 304.8	12.75 323.8	12	1.000 25.40	14.25 362.0	24.0
12	12.75 323.8	19.00 482.6	12.00 304.8	1.250 31.75	4.500 114.3	12.75 323.8	14.38 365.3	15.00 381.0	12	1.000 25.40	17.00 431.8	36.5
14	14.00 355.6	21.00 533.4	To be specified by Purchaser	1.380 35.10	5.000 127.0	14.00 355.6	15.75 400.1	16.25 412.7	12	1.120 28.40	18.75 476.3	48.4
16	16.00 406.4	23.50 596.9		1.440 36.60	5.000 127.0	16.00 406.4	18.00 475.2	18.50 469.9	16	1.120 28.40	21.25 539.8	60.6
18	18.00 457.2	25.00 635.0		1.560 39.60	5.500 139.7	18.00 457.2	19.88 505.0	21.00 533.4	16	1.250 31.75	22.75 577.9	68.3
20	20.00 508.0	27.50 698.5		1.690 42.90	5.690 144.5	20.00 508.0	22.00 558.8	23.00 584.2	20	1.250 31.75	25.00 635.0	84.5
24	24.00 609.6	32.00 812.8		1.880 47.80	6.000 152.4	24.00 609.6	26.12 663.4	27.25 692.1	20	1.380 35.10	29.50 749.3	115

Notes
- Dimension B corresponds to the pipe inside diameter. Values quoted assume 40S/Standard wall thickness.
- Weights are based on manufacturer's data and are approximate.
- Flat face flanges may be provided at full thickness, C, or with raised face removed (the latter is nonstandard).
- For ring joint facings see page 8-6. For weld end bevel see page 8-5.
- For tolerances see page 8-4.

Weld Neck Flanges - ANSI B16.5

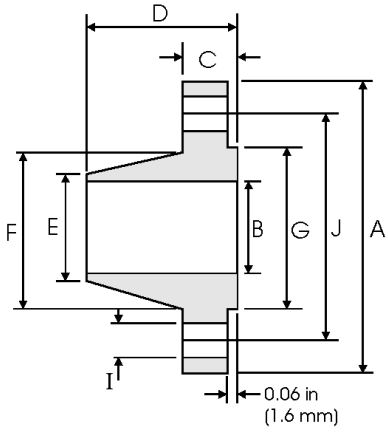

Class 300 lb

Pipe		Flange Data				Hub Data		Raised Face	Drilling Data			Weight
Nominal Pipe Size		A	B	C	D	E	F	G	H	I	J	
	Outside Diameter	Overall Diameter	Inside Diameter	Flange Thickness min	Overall Length	Diameter at Weld Bevel	Hub Diameter	Face Diameter	Number of Holes	Bolt Hole Diameter	Diameter of Circle of Holes	kg/ piece
	in	in mm	in mm	in mm	in mm	in mm	in mm	in mm		in mm	in mm	
1/2	0.840 21.30	3.750 95.20	0.620 15.70	0.560 14.20	2.060 52.30	0.840 21.30	1.500 38.10	1.380 35.00	4	0.620 15.70	2.620 66.55	0.75
3/4	1.050 26.70	4.620 117.3	0.820 20.80	0.620 15.70	2.250 57.15	1.050 26.70	1.880 47.70	1.690 42.90	4	0.750 19.00	3.250 82.50	1.26
1	1.315 33.40	4.880 123.9	1.050 26.70	0.690 17.50	2.440 62.00	1.320 33.50	2.120 53.80	2.000 50.80	4	0.750 19.00	3.500 88.90	1.52
1 1/4	1.660 42.20	5.250 133.3	1.380 35.10	0.750 19.00	2.560 65.00	1.660 42.20	2.500 63.50	2.500 63.50	4	0.750 19.00	3.880 98.50	2.03
1 1/2	1.900 48.30	6.120 155.4	1.610 40.90	0.810 20.60	2.690 68.30	1.900 48.30	2.750 69.85	2.880 73.15	4	0.880 22.30	4.500 114.3	2.89
2	2.375 60.30	6.500 165.1	2.070 52.60	0.880 22.30	2.750 69.85	2.380 60.45	3.310 84.00	3.620 91.90	8	0.750 19.00	5.000 127.0	3.40
2 1/2	2.875 73.00	7.500 190.5	2.470 62.70	1.000 25.40	3.000 76.20	2.880 73.15	3.940 100.0	4.120 104.6	8	0.880 22.30	5.880 149.3	5.17
3	3.500 88.90	8.250 209.5	3.070 78.00	1.120 28.40	3.120 79.25	3.500 88.90	4.620 117.3	5.000 127.0	8	0.880 22.30	6.620 168.1	6.93
3 1/2	4.000 101.6	9.000 228.6	3.550 90.20	1.190 30.20	3.190 81.00	4.000 101.6	5.250 133.3	5.500 139.7	8	0.880 22.30	7.250 184.1	8.67
4	4.500 114.3	10.00 254.0	4.030 102.4	1.250 31.70	3.380 85.80	4.500 114.3	5.750 146.0	6.190 157.2	8	0.880 22.30	7.880 200.1	11.2
5	5.563 141.3	11.00 279.4	5.050 128.3	1.380 35.00	3.880 98.50	5.560 141.2	7.000 177.8	7.310 185.7	8	0.880 22.30	9.250 234.9	15.1
6	6.625 168.3	12.50 317.5	6.070 154.2	1.440 36.50	3.880 98.50	6.630 168.4	8.120 206.2	8.500 215.9	12	0.880 22.30	10.62 269.7	19.1
8	8.625 219.1	15.00 381.0	7.980 202.7	1.620 41.10	4.380 111.2	8.630 219.2	10.25 260.3	10.62 269.7	12	1.000 25.40	13.00 330.2	29.9
10	10.75 273.0	17.50 444.5	10.02 254.5	1.880 47.70	4.620 117.3	10.75 273.0	12.62 320.5	12.75 323.8	16	1.120 28.40	15.25 387.3	42.7
12	12.75 323.8	20.50 520.7	12.00 304.8	2.000 50.80	5.120 130.0	12.75 323.8	14.75 374.6	15.00 381.0	16	1.250 31.70	17.75 450.8	61.8
14	14.00 355.6	23.00 584.2	To be specified by Purchaser	2.120 53.80	5.620 142.7	14.00 355.6	16.75 425.4	16.25 412.7	20	1.250 31.70	20.25 514.3	85.8
16	16.00 406.4	25.50 647.7		2.250 57.15	5.750 146.0	16.00 406.4	19.00 482.6	18.50 469.9	20	1.380 35.00	22.50 571.5	106
18	18.00 457.2	28.00 711.2		2.380 60.45	6.250 158.7	18.00 457.2	21.00 533.4	21.00 533.4	24	1.380 35.00	24.75 628.6	131
20	20.00 508.0	30.50 774.7		2.500 63.50	6.380 162.0	20.00 508.0	23.12 587.2	23.00 584.2	24	1.380 35.00	27.00 685.8	158
24	24.00 609.6	36.00 914.4		2.750 69.85	6.620 168.1	24.00 609.6	27.62 701.5	27.25 692.1	24	1.620 41.10	32.00 812.8	230

Notes
- Dimension B corresponds to the pipe inside diameter. Values quoted assume 40S/Standard wall thickness.
- Weights are based on manufacturer's data and are approximate.
- Flat face flanges may be provided at full thickness, C, or with raised face removed (the latter is nonstandard).
- For ring joint facings see page 8-6. For weld end bevel see page 8-5.
- For tolerances see page 8-4.

Weld Neck Flanges - ANSI B16.5

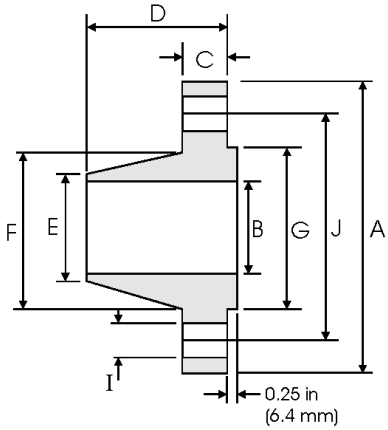

Class 400 lb

Nominal Pipe Size	Pipe: Outside Diameter (in / mm)	Flange Data: A Overall Diameter (in / mm)	Flange Data: B Inside Diameter (in / mm)	Flange Data: C Flange Thickness min (in / mm)	Flange Data: D Overall Length (in / mm)	Hub Data: E Diameter at Weld Bevel (in / mm)	Hub Data: F Hub Diameter (in / mm)	Raised Face: G Face Diameter (in / mm)	Drilling Data: H Number of Holes	Drilling Data: I Bolt Hole Diameter (in / mm)	Drilling Data: J Diameter of Circle of Holes (in / mm)	Weight: kg/piece
1/2	0.840 21.30	3.750 95.30	To be specified by Purchaser	0.560 14.20	2.060 52.30	0.840 21.30	1.500 38.10	1.380 35.00	4	0.620 15.70	2.620 66.55	0.87
3/4	1.050 26.70	4.620 117.3		0.620 15.70	2.250 57.15	1.050 26.70	1.880 47.80	1.690 42.90	4	0.750 19.10	3.250 82.60	1.45
1	1.315 33.40	4.880 124.0		0.690 17.50	2.440 62.00	1.320 33.50	2.120 53.80	2.000 50.80	4	0.750 19.10	3.500 88.90	1.76
1 1/4	1.660 42.20	5.250 133.4		0.810 20.60	2.620 66.55	1.660 42.20	2.500 63.50	2.500 63.50	4	0.750 19.10	3.880 98.60	2.49
1 1/2	1.900 48.30	6.120 155.4		0.880 22.40	2.750 69.85	1.900 48.30	2.750 69.85	2.880 73.15	4	0.880 22.40	4.500 114.3	3.49
2	2.375 60.30	6.500 165.1		1.000 25.40	2.880 73.15	2.380 60.45	3.310 84.10	3.620 91.90	8	0.750 19.10	5.000 127.0	4.36
2 1/2	2.875 73.00	7.500 190.5		1.120 28.40	3.120 79.25	2.880 73.15	3.940 100.1	4.120 104.6	8	0.880 22.40	5.880 149.4	6.43
3	3.500 88.90	8.250 209.6		1.250 31.75	3.250 82.60	3.500 88.90	4.620 117.3	5.000 127.0	8	0.880 22.40	6.620 168.1	8.53
3 1/2	4.000 101.6	9.000 228.6		1.380 35.10	3.380 85.90	4.000 101.6	5.250 133.4	5.500 139.7	8	1.000 25.40	7.250 184.2	10.7
4	4.500 114.3	10.00 254.0		1.380 35.10	3.500 88.90	4.500 114.3	5.750 146.1	6.190 157.2	8	1.000 25.40	7.880 200.2	12.8
5	5.563 141.3	11.00 279.4		1.500 38.10	4.000 101.6	5.560 141.2	7.000 177.8	7.310 185.7	8	1.000 25.40	9.250 235.0	16.9
6	6.625 168.3	12.50 317.5		1.620 41.10	4.060 103.1	6.630 168.4	8.120 206.2	8.500 215.9	12	1.000 25.40	10.62 269.7	22.0
8	8.625 219.1	15.00 381.0		1.880 47.80	4.620 117.3	8.630 219.2	10.25 260.4	10.62 269.7	12	1.120 28.40	13.00 330.2	34.7
10	10.75 273.0	17.50 444.5		2.120 53.80	4.880 124.0	10.75 273.0	12.62 320.5	12.75 323.8	16	1.250 31.75	15.25 387.4	48.5
12	12.75 323.8	20.50 520.7		2.250 57.15	5.380 136.7	12.75 323.8	14.75 374.7	15.00 381.0	16	1.380 35.10	17.75 450.9	69.6
14	14.00 355.6	23.00 584.2		2.380 60.45	5.880 149.4	14.00 355.6	16.75 425.5	16.25 412.7	20	1.380 35.10	20.25 514.4	95.5
16	16.00 406.4	25.50 647.7		2.500 63.50	6.000 152.4	16.00 406.4	19.00 482.6	18.50 469.9	20	1.500 38.10	22.50 571.5	118
18	18.00 457.2	28.00 711.2		2.620 66.55	6.500 165.1	18.00 457.2	21.00 533.4	21.00 533.4	24	1.500 38.10	24.75 628.7	145
20	20.00 508.0	30.50 774.7		2.750 69.85	6.620 168.1	20.00 508.0	23.12 587.2	23.00 584.2	24	1.620 41.10	27.00 685.8	173
24	24.00 609.6	36.00 914.4		3.000 76.20	6.880 174.8	24.00 609.6	27.62 701.5	27.25 692.1	24	1.880 47.80	32.00 812.8	249

Notes
- Dimension B corresponds to the pipe inside diameter. Values quoted assume 40S/Standard wall thickness.
- Weights are based on manufacturer's data and are approximate.
- For ring joint facings see page 8-6. For weld end bevel see page 8-5.
- For tolerances see page 8-4.

Weld Neck Flanges - ANSI B16.5

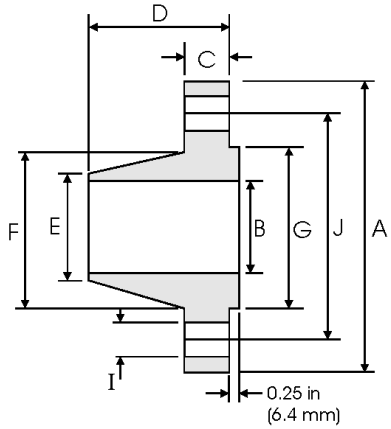

Class 600 lb

Nominal Pipe Size	Pipe: Outside Diameter in / mm	Flange Data: A Overall Diameter in / mm	Flange Data: B Inside Diameter in / mm	Flange Data: C Flange Thickness min in / mm	Flange Data: D Overall Length in / mm	Hub Data: E Diameter at Weld Bevel in / mm	Hub Data: F Hub Diameter in / mm	Raised Face: G Face Diameter in / mm	Drilling Data: H Number of Holes	Drilling Data: I Bolt Hole Diameter in / mm	Drilling Data: J Diameter of Circle of Holes in / mm	Weight: kg/ piece
1/2	0.840 21.30	3.750 95.30	To be specified by Purchaser	0.560 14.20	2.060 52.30	0.840 21.30	1.500 38.10	1.380 35.00	4	0.620 15.70	2.620 66.55	0.87
3/4	1.050 26.70	4.620 117.3		0.620 15.70	2.250 57.15	1.050 26.70	1.880 47.80	1.690 42.90	4	0.750 19.10	3.250 82.60	1.45
1	1.315 33.40	4.880 124.0		0.690 17.50	2.440 62.00	1.320 33.50	2.120 53.80	2.000 50.80	4	0.750 19.10	3.500 88.90	1.76
1 1/4	1.660 42.20	5.250 133.4		0.810 20.60	2.620 66.55	1.660 42.20	2.500 63.50	2.500 63.50	4	0.750 19.10	3.880 98.60	2.49
1 1/2	1.900 48.30	6.120 155.4		0.880 22.40	2.750 69.85	1.900 48.30	2.750 69.85	2.880 73.15	4	0.880 22.40	4.500 114.3	3.49
2	2.375 60.30	6.500 165.1		1.000 25.40	2.880 73.15	2.380 60.45	3.310 84.10	3.620 91.90	8	0.750 19.10	5.000 127.0	4.36
2 1/2	2.875 73.00	7.500 190.5		1.120 28.40	3.120 79.25	2.880 73.15	3.940 100.1	4.120 104.6	8	0.880 22.40	5.880 149.4	6.43
3	3.500 88.90	8.250 209.6		1.250 31.75	3.250 82.60	3.500 88.90	4.620 117.3	5.000 127.0	8	0.880 22.40	6.620 168.1	8.53
3 1/2	4.000 101.6	9.000 228.6		1.380 35.10	3.380 85.90	4.000 101.6	5.250 133.4	5.500 139.7	8	1.000 25.40	7.250 184.2	10.7
4	4.500 114.3	10.75 273.1		1.500 38.10	4.000 101.6	4.500 114.3	6.000 152.4	6.190 157.2	8	1.000 25.40	8.500 215.9	17.4
5	5.563 141.3	13.00 330.2		1.750 44.50	4.500 114.3	5.560 141.2	7.440 189.0	7.310 185.7	8	1.120 28.40	10.50 266.7	29.2
6	6.625 168.3	14.00 355.6		1.880 47.80	4.620 117.3	6.630 168.4	8.750 222.3	8.500 215.9	12	1.120 28.40	11.50 292.1	34.9
8	8.625 219.1	16.50 419.1		2.190 55.60	5.250 133.4	8.630 219.2	10.75 273.1	10.62 269.7	12	1.250 31.75	13.75 349.3	53.9
10	10.75 273.0	20.00 508.0		2.500 63.50	6.000 152.4	10.75 273.0	13.50 342.9	12.75 323.8	16	1.380 35.10	17.00 431.8	86.5
12	12.75 323.8	22.00 558.8		2.620 66.55	6.120 155.4	12.75 323.8	15.75 400.1	15.00 381.0	20	1.380 35.10	19.25 489.0	103
14	14.00 355.6	23.75 603.3		2.750 69.85	6.500 165.1	14.00 355.6	17.00 431.8	16.25 412.7	20	1.500 38.10	20.75 527.1	122
16	16.00 406.4	27.00 685.8		3.000 76.20	7.000 177.8	16.00 406.4	19.50 495.3	18.50 469.9	20	1.620 41.10	23.75 603.3	170
18	18.00 457.2	29.25 743.0		3.250 82.60	7.250 184.2	18.00 457.2	21.50 546.1	21.00 533.4	20	1.750 44.50	25.75 654.1	204
20	20.00 508.0	32.00 812.8		3.500 88.90	7.500 190.5	20.00 508.0	24.00 609.6	23.00 584.2	24	1.750 44.50	28.50 723.9	254
24	24.00 609.6	37.00 939.8		4.000 101.6	8.000 203.2	24.00 609.6	28.25 717.6	27.25 692.1	24	2.000 50.80	33.00 838.2	358

Notes
- Dimension B corresponds to the pipe inside diameter. Values quoted assume 40S/Standard wall thickness.
- Weights are based on manufacturer's data and are approximate.
- For ring joint facings see page 8-6. For weld end bevel see page 8-5.
- For tolerances see page 8-4.

Weld Neck Flanges - ANSI B16.5

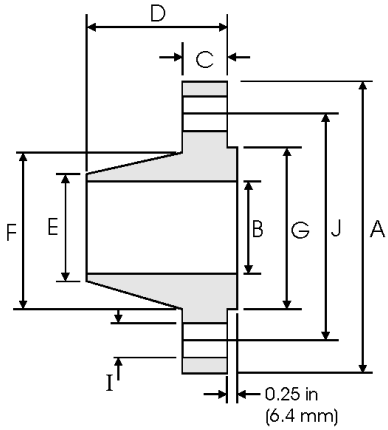

Class 900 lb

Pipe		Flange Data				Hub Data		Raised Face	Drilling Data			Weight
Nominal Pipe Size		A	B	C	D	E	F	G	H	I	J	
	Outside Diameter	Overall Diameter	Inside Diameter	Flange Thickness min	Overall Length	Diameter at Weld Bevel	Hub Diameter	Face Diameter	Number of Holes	Bolt Hole Diameter	Diameter of Circle of Holes	kg/ piece
	in mm	in mm	in mm	in mm	in mm	in mm	in mm	in mm		in mm	in mm	
1/2	0.840 21.30	4.750 120.6	To be specified by Purchaser	0.880 22.30	2.380 60.45	0.840 21.30	1.500 38.10	1.380 35.00	4	0.880 22.30	3.250 82.50	1.87
3/4	1.050 26.70	5.120 130.0		1.000 25.40	2.750 69.85	1.050 26.70	1.750 44.00	1.690 42.90	4	0.880 22.30	3.500 88.90	2.56
1	1.315 33.40	5.880 149.3		1.120 28.40	2.880 73.15	1.320 33.50	2.060 52.30	2.000 50.80	4	1.000 25.40	4.000 101.6	3.74
1 1/4	1.660 42.20	6.250 158.7		1.120 28.40	2.880 73.15	1.660 42.20	2.500 63.50	2.500 63.50	4	1.000 25.40	4.380 111.2	4.33
1 1/2	1.900 48.30	7.000 177.8		1.250 31.70	3.250 82.50	1.900 48.30	2.750 69.85	2.880 73.15	4	1.120 28.40	4.880 123.9	5.94
2	2.375 60.30	8.500 215.9		1.500 38.10	4.000 101.6	2.380 60.45	4.120 104.6	3.620 91.90	8	1.000 25.40	6.500 165.1	10.8
2 1/2	2.875 73.00	9.620 244.3		1.620 41.10	4.120 104.6	2.880 73.15	4.880 123.9	4.120 104.6	8	1.120 28.40	7.500 190.5	15.0
3	3.500 88.90	9.500 241.3		1.500 38.10	4.000 101.6	3.500 88.90	5.000 127.0	5.000 127.0	8	1.000 25.40	7.500 190.5	13.7
4	4.500 114.3	11.50 292.1		1.750 44.40	4.500 114.3	4.500 114.3	6.250 158.7	6.190 157.2	8	1.250 31.70	9.250 234.9	22.5
5	5.563 141.3	13.75 349.2		2.000 50.80	5.000 127.0	5.560 141.2	7.500 190.5	7.310 185.7	8	1.380 35.00	11.00 279.4	37.4
6	6.625 168.3	15.00 381.0		2.190 55.60	5.500 139.7	6.630 168.4	9.250 234.9	8.500 215.9	12	1.250 31.70	12.50 317.5	47.7
8	8.625 219.1	18.50 469.9		2.500 63.50	6.380 162.0	8.630 219.2	11.75 298.4	10.62 269.7	12	1.500 38.10	15.50 393.7	81.3
10	10.75 273.0	21.50 546.1		2.750 69.85	7.250 184.1	10.75 273.0	14.50 368.3	12.75 323.8	16	1.500 38.10	18.50 469.9	119
12	12.75 323.8	24.00 609.6		3.120 79.25	7.880 200.1	12.75 323.8	16.50 419.1	15.00 381.0	20	1.500 38.10	21.00 533.4	157
14	14.00 355.6	25.25 641.3		3.380 85.80	8.380 212.8	14.00 355.6	17.75 450.8	16.25 412.7	20	1.620 41.10	22.00 558.8	180
16	16.00 406.4	27.75 704.8		3.500 88.90	8.500 215.9	16.00 406.4	20.00 508.0	18.50 469.9	20	1.750 44.40	24.25 615.9	217
18	18.00 457.2	31.00 787.4		4.000 101.6	9.000 228.6	18.00 457.2	22.25 565.1	21.00 533.4	20	2.000 50.80	27.00 685.8	292
20	20.00 508.0	33.75 857.2		4.250 107.9	9.750 247.6	20.00 508.0	24.50 622.3	23.00 584.2	20	2.120 53.80	29.50 749.3	362
24	24.00 609.6	41.00 1041.4		5.500 139.7	11.50 292.1	24.00 609.6	29.50 749.3	27.25 692.1	20	2.620 66.55	35.50 901.7	665

Notes
- Dimension B corresponds to the pipe inside diameter. Values quoted assume 40S/Standard wall thickness.
- Weights are based on manufacturer's data and are approximate.
- For ring joint facings see page 8-6. For weld end bevel see page 8-5.
- For tolerances see page 8-4.

Weld Neck Flanges - ANSI B16.5

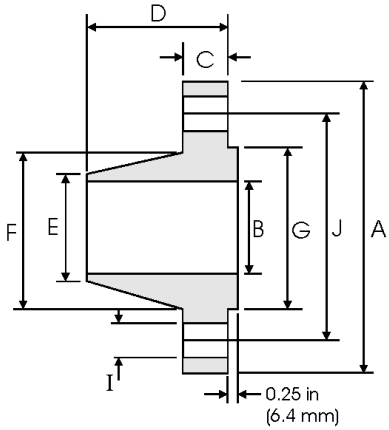

Class 1500 lb

Pipe		Flange Data				Hub Data		Raised Face	Drilling Data			Weight
Nominal Pipe Size		A	B	C	D	E	F	G	H	I	J	
	Outside Diameter	Overall Diameter	Inside Diameter	Flange Thickness min	Overall Length	Diameter at Weld Bevel	Hub Diameter	Face Diameter	Number of Holes	Bolt Hole Diameter	Diameter of Circle of Holes	kg/ piece
	in mm	in mm	in mm	in mm	in mm	in mm	in mm	in mm		in mm	in mm	
1/2	0.840 21.30	4.750 120.6	To be specified by Purchaser	0.880 22.30	2.380 60.45	0.840 21.30	1.500 38.10	1.380 35.00	4	0.880 22.30	3.250 82.50	1.87
3/4	1.050 26.70	5.120 130.0		1.000 25.40	2.750 69.85	1.050 26.70	1.750 44.00	1.690 42.90	4	0.880 22.30	3.500 88.90	2.56
1	1.315 33.40	5.880 149.3		1.120 28.40	2.880 73.15	1.320 33.50	2.060 52.30	2.000 50.80	4	1.000 25.40	4.000 101.6	3.74
1 1/4	1.660 42.20	6.250 158.7		1.120 28.40	2.880 73.15	1.660 42.20	2.500 63.50	2.500 63.50	4	1.000 25.40	4.380 111.2	4.33
1 1/2	1.900 48.30	7.000 177.8		1.250 31.70	3.250 82.50	1.900 48.30	2.750 69.85	2.880 73.15	4	1.120 28.40	4.880 123.9	5.94
2	2.375 60.30	8.500 215.9		1.500 38.10	4.000 101.6	2.380 60.45	4.120 104.6	3.620 91.90	8	1.000 25.40	6.500 165.1	10.8
2 1/2	2.875 73.00	9.620 244.3		1.620 41.10	4.120 104.6	2.880 73.15	4.880 123.9	4.120 104.6	8	1.120 28.40	7.500 190.5	15.0
3	3.500 88.90	10.50 266.7		1.880 47.70	4.620 177.3	3.500 88.90	5.250 133.3	5.000 127.0	8	1.250 31.70	8.000 203.2	19.9
4	4.500 114.3	12.25 311.1		2.120 53.80	4.880 123.9	4.500 114.3	6.380 162.0	6.190 157.2	8	1.380 35.00	9.500 241.3	29.9
5	5.563 141.3	14.75 374.6		2.880 73.15	6.120 155.4	5.560 141.2	7.750 196.8	7.310 185.7	8	1.620 41.10	11.50 292.1	55.4
6	6.625 168.3	15.50 393.7		3.250 82.50	6.750 171.4	6.630 168.4	9.000 228.6	8.500 215.9	12	1.500 38.10	12.50 317.5	68.4
8	8.625 219.1	19.00 482.6		3.620 91.90	8.380 212.8	8.630 219.2	11.50 292.1	10.62 269.7	12	1.750 44.40	15.50 393.7	117
10	10.75 273.0	23.00 584.2		4.250 107.9	10.00 254.0	10.75 273.0	14.50 368.3	12.75 323.8	12	2.000 50.80	19.00 482.6	194
12	12.75 323.8	26.50 673.1		4.880 123.9	11.12 282.4	12.75 323.8	17.75 450.8	15.00 381.0	16	2.120 53.80	22.50 571.5	288
14	14.00 355.6	29.50 749.3		5.250 133.3	11.75 298.4	14.00 355.6	19.50 495.3	16.25 412.7	16	2.380 60.45	25.00 635.0	380
16	16.00 406.4	32.50 825.5		5.750 146.0	12.25 311.1	16.00 406.4	21.75 552.4	18.50 469.9	16	2.620 66.55	27.75 704.8	485
18	18.00 457.2	36.00 914.4		6.380 162.0	12.88 327.1	18.00 457.2	23.50 596.9	21.00 533.4	16	2.880 73.15	30.50 774.7	644
20	20.00 508.0	38.75 984.2		7.000 177.8	14.00 355.6	20.00 508.0	25.25 641.3	23.00 584.2	16	3.120 79.25	32.75 831.8	775
24	24.00 609.6	46.00 1168.4		8.000 203.2	16.00 406.4	24.00 609.6	30.00 762.0	27.25 692.1	16	3.620 91.90	39.00 990.6	1232

Notes
- Dimension B corresponds to the pipe inside diameter. Values quoted assume 40S/Standard wall thickness.
- Weights are based on manufacturer's data and are approximate.
- For ring joint facings see page 8-6. For weld end bevel see page 8-5.
- For tolerances see page 8-4.

Weld Neck Flanges - ANSI B16.5

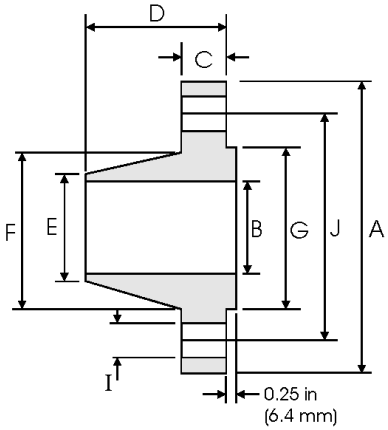

Class 2500 lb

Pipe		Flange Data				Hub Data		Raised Face	Drilling Data			Weight
Nominal Pipe Size		A	B	C	D	E	F	G	H	I	J	
	Outside Diameter	Overall Diameter	Inside Diameter	Flange Thickness min	Overall Length	Diameter at Weld Bevel	Hub Diameter	Face Diameter	Number of Holes	Bolt Hole Diameter	Diameter of Circle of Holes	kg/ piece
	in mm	in mm	in mm	in mm	in mm	in mm	in mm	in mm		in mm	in mm	
1/2	0.840 21.30	5.250 133.4	To be specified by Purchaser	1.190 30.20	2.880 73.15	0.840 21.30	1.690 42.90	1.380 35.00	4	0.880 22.40	3.500 88.90	3.12
3/4	1.050 26.70	5.500 139.7		1.250 31.75	3.120 79.25	1.050 26.70	2.000 50.80	1.690 42.90	4	0.880 22.40	3.750 95.30	3.70
1	1.315 33.40	6.250 158.8		1.380 35.10	3.500 88.90	1.320 33.50	2.250 57.15	2.000 50.80	4	1.000 25.40	4.250 108.0	5.24
1 1/4	1.660 42.20	7.250 184.2		1.500 38.10	3.750 95.30	1.660 42.20	2.880 73.15	2.500 63.50	4	1.120 28.40	5.120 130.0	7.74
1 1/2	1.900 48.30	8.000 203.2		1.750 44.50	4.380 111.3	1.900 48.30	3.120 79.25	2.880 73.15	4	1.250 31.75	5.750 146.1	10.9
2	2.375 60.30	9.250 235.0		2.000 50.80	5.000 127.0	2.380 60.45	3.750 95.30	3.620 91.90	8	1.120 28.40	6.750 171.5	16.2
2 1/2	2.875 73.00	10.50 266.7		2.250 57.15	5.620 142.7	2.880 73.15	4.500 114.3	4.120 104.6	8	1.250 31.75	7.750 196.9	23.7
3	3.500 88.90	12.00 304.8		2.620 66.55	6.620 168.1	3.500 88.90	5.250 133.4	5.000 127.0	8	1.380 35.10	9.000 228.6	36.2
4	4.500 114.3	14.00 355.6		3.000 76.20	7.500 190.5	4.500 114.3	6.500 165.1	6.190 157.2	8	1.620 41.10	10.75 273.1	55.3
5	5.563 141.3	16.50 419.1		3.620 91.90	9.000 228.6	5.560 141.2	8.000 203.2	7.310 185.7	8	1.880 47.80	12.75 323.9	92.5
6	6.625 168.3	19.00 482.6		4.250 108.0	10.75 273.1	6.630 168.4	9.250 235.0	8.500 215.9	8	2.120 53.80	14.50 368.3	143
8	8.625 219.1	21.75 552.5		5.000 127.0	12.50 317.5	8.630 219.2	12.00 304.8	10.62 269.7	12	2.120 53.80	17.25 438.2	215
10	10.75 273.0	26.50 673.1		6.500 165.1	16.50 419.1	10.75 273.0	14.75 374.7	12.75 323.8	12	2.620 66.55	21.25 539.8	406
12	12.75 323.8	30.00 762.0		7.250 184.2	18.25 463.6	12.75 323.8	17.38 441.5	15.00 381.0	12	2.880 73.15	24.38 619.3	572

Notes
- Dimension B corresponds to the pipe inside diameter. Values quoted assume 40S/Standard wall thickness.
- Weights are based on manufacturer's data and are approximate.
- For ring joint facings see page 8-6. For weld end bevel see page 8-5.
- For tolerances see page 8-4.

Slip On Flanges - ANSI B16.5

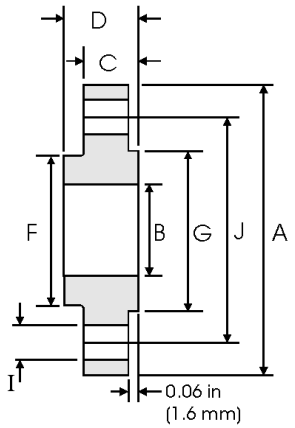

Class 150 lb

Pipe		Flange Data				Hub	Raised Face	Drilling Data			Weight
Nominal Pipe Size		A	B	C	D	F	G	H	I	J	
	Outside Diameter	Overall Diameter	Inside Diameter	Flange Thickness min	Overall Length	Hub Diameter	Face Diameter	Number of Holes	Bolt Hole Diameter	Diameter of Circle of Holes	kg/ piece
	in mm	in mm	in mm	in mm	in mm	in mm	in mm		in mm	in mm	
1/2	0.840 21.30	3.500 88.90	0.880 22.40	0.440 11.20	0.620 15.70	1.190 30.20	1.380 35.10	4	0.620 15.70	2.380 60.45	0.39
3/4	1.050 26.70	3.880 98.60	1.090 27.70	0.500 12.70	0.620 15.70	1.500 38.10	1.690 42.90	4	0.620 15.70	2.750 69.85	0.56
1	1.315 33.40	4.250 108.0	1.360 34.50	0.560 14.20	0.690 17.50	1.940 49.30	2.000 50.80	4	0.620 15.70	3.120 79.25	0.78
1 1/4	1.660 42.20	4.620 117.3	1.700 43.20	0.620 15.70	0.810 20.60	2.310 58.70	2.500 63.50	4	0.620 15.70	3.500 88.90	1.03
1 1/2	1.900 48.30	5.000 127.0	1.950 49.50	0.690 17.50	0.880 22.40	2.560 65.00	2.880 73.15	4	0.620 15.70	3.880 98.60	1.32
2	2.375 60.30	6.000 152.4	2.440 62.00	0.750 19.10	1.000 25.40	3.060 77.70	3.620 91.90	4	0.750 19.10	4.750 120.7	2.06
2 1/2	2.875 73.00	7.000 177.8	2.940 74.70	0.880 22.40	1.120 28.40	3.560 90.40	4.120 104.6	4	0.750 19.10	5.500 139.7	3.28
3	3.500 88.90	7.500 190.5	3.570 90.70	0.940 23.90	1.190 30.20	4.250 108.0	5.000 127.0	4	0.750 19.10	6.000 152.4	3.85
3 1/2	4.000 101.6	8.500 215.9	4.070 103.4	0.940 23.90	1.250 31.75	4.810 122.2	5.500 139.7	8	0.750 19.10	7.000 177.8	4.81
4	4.500 114.3	9.000 228.6	4.570 116.1	0.940 23.90	1.310 33.30	5.310 134.9	6.190 157.2	8	0.750 19.10	7.500 190.5	5.30
5	5.563 141.3	10.00 254.0	5.660 143.8	0.940 23.90	1.440 36.60	6.440 163.6	7.310 185.7	8	0.880 22.40	8.500 215.9	6.07
6	6.625 168.3	11.00 279.4	6.720 170.7	1.000 25.40	1.560 39.60	7.560 192.0	8.500 215.9	8	0.880 22.40	9.500 241.3	7.45
8	8.625 219.1	13.50 342.9	8.720 221.5	1.120 28.40	1.750 44.50	9.690 246.1	10.62 269.7	8	0.880 22.40	11.75 298.5	12.1
10	10.75 273.0	16.00 406.4	10.88 276.3	1.190 30.20	1.940 49.30	12.00 304.8	12.75 323.9	12	1.000 25.40	14.25 362.0	16.5
12	12.75 323.8	19.00 482.6	12.88 327.1	1.250 31.75	2.190 55.60	14.38 365.3	15.00 381.0	12	1.000 25.40	17.00 431.8	26.2
14	14.00 355.6	21.00 533.4	14.14 359.1	1.380 35.10	2.250 57.15	15.75 400.1	16.25 412.8	12	1.120 28.40	18.75 476.3	34.6
16	16.00 406.4	23.50 596.9	16.16 410.5	1.440 36.60	2.500 63.50	18.00 457.2	18.50 469.9	16	1.120 28.40	21.25 539.8	44.8
18	18.00 457.2	25.00 635.0	18.18 461.8	1.560 39.60	2.690 68.30	19.88 505.0	21.00 533.4	16	1.250 31.75	22.75 577.9	48.9
20	20.00 508.0	27.50 698.5	20.20 513.1	1.690 42.90	2.880 73.15	22.00 558.8	23.00 584.2	20	1.250 31.75	25.00 635.0	61.9
24	24.00 609.6	32.00 812.8	24.25 616.0	1.880 47.80	3.250 82.60	26.12 663.4	27.25 692.2	20	1.380 35.10	29.50 749.3	86.9

Notes
- Weights are based on manufacturer's data and are approximate.
- Flat face flanges may be provided at full thickness, C, or with raised face removed (the latter is nonstandard).
- For ring joint facings see page 8-6.
- For tolerances see page 8-4.

Slip On Flanges - ANSI B16.5

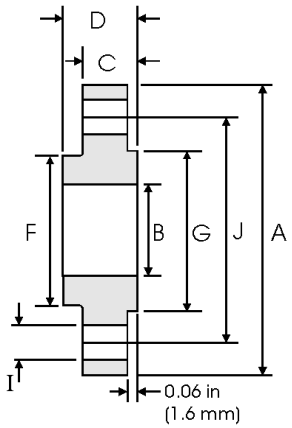

Class 300 lb

Pipe		Flange Data				Hub	Raised Face	Drilling Data			Weight
Nominal Pipe Size		A	B	C	D	F	G	H	I	J	
	Outside Diameter	Overall Diameter	Inside Diameter	Flange Thickness min	Overall Length	Hub Diameter	Face Diameter	Number of Holes	Bolt Hole Diameter	Diameter of Circle of Holes	kg/ piece
	in mm	in mm	in mm	in mm	in mm	in mm	in mm		in mm	in mm	
1/2	0.840 21.30	3.750 95.20	0.880 22.40	0.560 14.20	0.880 22.40	1.500 38.10	1.380 35.10	4	0.620 15.70	2.620 66.55	0.64
3/4	1.050 26.70	4.620 117.3	1.090 27.70	0.620 15.70	1.000 25.40	1.880 47.70	1.690 42.90	4	0.750 19.10	3.250 82.50	1.12
1	1.315 33.40	4.880 123.9	1.360 34.50	0.690 17.50	1.060 26.90	2.120 53.80	2.000 50.80	4	0.750 19.10	3.500 88.90	1.36
1 1/4	1.660 42.20	5.250 133.3	1.700 43.20	0.750 19.00	1.060 26.90	2.500 63.50	2.500 63.50	4	0.750 19.10	3.880 98.60	1.68
1 1/2	1.900 48.30	6.120 155.4	1.950 49.50	0.810 20.60	1.190 30.20	2.750 69.85	2.880 73.15	4	0.880 22.40	4.500 114.3	2.49
2	2.375 60.30	6.500 165.1	2.440 62.00	0.880 22.30	1.310 33.20	3.310 84.00	3.620 91.90	8	0.750 19.10	5.000 127.0	2.87
2 1/2	2.875 73.00	7.500 190.5	2.940 74.70	1.000 25.40	1.500 38.10	3.940 100.0	4.120 104.6	8	0.880 22.40	5.880 149.4	4.32
3	3.500 88.90	8.250 209.5	3.570 90.70	1.120 28.40	1.690 42.90	4.620 117.3	5.000 127.0	8	0.880 22.40	6.620 168.1	5.85
3 1/2	4.000 101.6	9.000 228.6	4.070 103.4	1.190 30.20	1.750 44.40	5.250 133.3	5.500 139.7	8	0.880 22.40	7.250 184.2	7.34
4	4.500 114.3	10.00 254.0	4.570 116.1	1.250 31.70	1.880 47.70	5.750 146.0	6.190 157.2	8	0.880 22.40	7.880 200.1	9.61
5	5.563 141.3	11.00 279.4	5.660 143.8	1.380 35.00	2.000 50.80	7.000 177.8	7.310 185.7	8	0.880 22.40	9.250 234.9	12.3
6	6.625 168.3	12.50 317.5	6.720 170.7	1.440 36.50	2.060 52.30	8.120 206.2	8.500 215.9	12	0.880 22.40	10.62 269.7	15.6
8	8.625 219.1	15.00 381.0	8.720 221.5	1.620 41.10	2.440 61.90	10.25 260.3	10.62 269.7	12	1.000 25.40	13.00 330.2	24.2
10	10.75 273.0	17.50 444.5	10.88 276.3	1.880 47.70	2.620 66.55	12.62 320.5	12.75 323.9	16	1.120 28.40	15.25 387.3	34.1
12	12.75 323.8	20.50 520.7	12.88 327.1	2.000 50.80	2.880 73.15	14.75 374.6	15.00 381.0	16	1.250 31.70	17.75 450.8	49.8
14	14.00 355.6	23.00 584.2	14.14 359.1	2.120 53.80	3.000 76.20	16.75 425.4	16.25 412.8	20	1.250 31.70	20.25 514.4	69.9
16	16.00 406.4	25.50 647.7	16.16 410.5	2.250 57.15	3.250 82.50	19.00 482.6	18.50 469.9	20	1.380 35.00	22.50 571.5	88.1
18	18.00 457.2	28.00 711.2	18.18 461.8	2.380 60.45	3.500 88.90	21.00 533.4	21.00 533.4	24	1.380 35.00	24.75 628.7	109
20	20.00 508.0	30.50 774.7	20.20 513.1	2.500 63.50	3.750 95.20	23.12 587.2	23.00 584.2	24	1.380 35.00	27.00 685.8	134
24	24.00 609.6	36.00 914.4	24.25 616.0	2.750 69.85	4.190 106.4	27.62 701.5	27.25 692.2	24	1.620 41.00	32.00 812.8	201

Notes
- Weights are based on manufacturer's data and are approximate.
- Flat face flanges may be provided at full thickness, C, or with raised face removed (the latter is nonstandard).
- For ring joint facings see page 8-6.
- For tolerances see page 8-4.

Slip On Flanges - ANSI B16.5

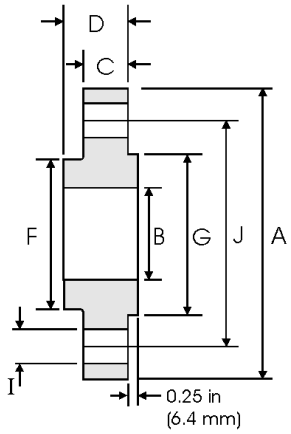

Class 400 lb

Pipe		Flange Data				Hub	Raised Face	Drilling Data			Weight
Nominal Pipe Size		A	B	C	D	F	G	H	I	J	
	Outside Diameter	Overall Diameter	Inside Diameter	Flange Thickness min	Overall Length	Hub Diameter	Face Diameter	Number of Holes	Bolt Hole Diameter	Diameter of Circle of Holes	kg/ piece
	in mm	in mm	in mm	in mm	in mm	in mm	in mm		in mm	in mm	
1/2	0.840 21.30	3.750 95.30	0.880 22.40	0.560 14.20	0.880 22.40	1.500 38.10	1.380 35.10	4	0.620 15.70	2.620 66.55	0.74
3/4	1.050 26.70	4.620 117.3	1.090 27.70	0.620 15.70	1.000 25.40	1.880 47.70	1.690 42.90	4	0.750 19.10	3.250 82.50	1.27
1	1.315 33.40	4.880 124.0	1.360 34.50	0.690 17.50	1.060 26.90	2.120 53.80	2.000 50.80	4	0.750 19.10	3.500 88.90	1.52
1 1/4	1.660 42.20	5.250 133.4	1.700 43.20	0.810 20.60	1.120 28.40	2.500 63.50	2.500 63.50	4	0.750 19.10	3.880 98.60	2.03
1 1/2	1.900 48.30	6.120 155.4	1.950 49.50	0.880 22.40	1.250 31.75	2.750 69.85	2.880 73.15	4	0.880 22.40	4.500 114.3	2.96
2	2.375 60.30	6.500 165.1	2.440 62.00	1.000 25.40	1.440 36.60	3.310 84.00	3.620 91.90	8	0.750 19.10	5.000 127.0	3.62
2 1/2	2.875 73.00	7.500 190.5	2.940 74.70	1.120 28.40	1.620 41.10	3.940 100.0	4.120 104.6	8	0.880 22.40	5.880 149.4	5.28
3	3.500 88.90	8.250 209.6	3.570 90.70	1.250 31.75	1.810 46.00	4.620 117.3	5.000 127.0	8	0.880 22.40	6.620 168.1	7.00
3 1/2	4.000 101.6	9.000 228.6	4.070 103.4	1.380 35.10	1.940 49.30	5.250 133.3	5.500 139.7	8	1.000 25.40	7.250 184.2	8.84
4	4.500 114.3	10.00 254.0	4.570 116.1	1.380 35.10	2.000 50.80	5.750 146.0	6.190 157.2	8	1.000 25.40	7.880 200.1	11.1
5	5.563 141.3	11.00 279.4	5.660 143.8	1.500 38.10	2.120 53.80	7.000 177.8	7.310 185.7	8	1.000 25.40	9.250 234.9	13.9
6	6.625 168.3	12.50 317.5	6.720 170.7	1.620 41.10	2.250 57.15	8.120 206.2	8.500 215.9	12	1.000 25.40	10.62 269.7	18.3
8	8.625 219.1	15.00 381.0	8.720 221.5	1.880 47.80	2.690 68.30	10.25 260.3	10.62 269.7	12	1.120 28.40	13.00 330.2	28.6
10	10.75 273.0	17.50 444.5	10.88 276.3	2.120 53.80	2.880 73.15	12.62 320.5	12.75 323.9	16	1.250 31.75	15.25 387.3	39.2
12	12.75 323.8	20.50 520.7	12.88 327.1	2.250 57.15	3.120 79.25	14.75 374.6	15.00 381.0	16	1.380 35.10	17.75 450.8	57.0
14	14.00 355.6	23.00 584.2	14.14 359.1	2.380 60.05	3.310 84.10	16.75 425.4	16.25 412.8	20	1.380 35.10	20.25 514.4	79.1
16	16.00 406.4	25.50 647.7	16.16 410.5	2.500 63.50	3.690 93.70	19.00 482.6	18.50 469.9	20	1.500 38.10	22.50 571.5	101
18	18.00 457.2	28.00 711.2	18.18 461.8	2.620 66.55	3.880 98.60	21.00 533.4	21.00 533.4	24	1.500 38.10	24.75 628.7	123
20	20.00 508.0	30.50 774.7	20.20 513.1	2.750 69.85	4.000 101.6	23.12 587.2	23.00 584.2	24	1.620 41.10	27.00 685.8	146
24	24.00 609.6	36.00 914.4	24.25 616.0	3.000 76.20	4.500 114.3	27.62 701.5	27.25 692.2	24	1.880 47.80	32.00 812.8	219

Notes
- Weights are based on manufacturer's data and are approximate.
- For ring joint facings see page 8-6.
- For tolerances see page 8-4.

Slip On Flanges - ANSI B16.5

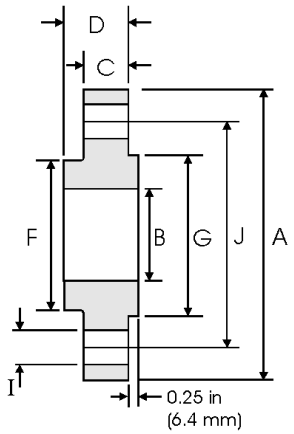

Class 600 lb

Pipe		Flange Data				Hub	Raised Face	Drilling Data			Weight
Nominal Pipe Size		A	B	C	D	F	G	H	I	J	
	Outside Diameter	Overall Diameter	Inside Diameter	Flange Thickness min	Overall Length	Hub Diameter	Face Diameter	Number of Holes	Bolt Hole Diameter	Diameter of Circle of Holes	kg/ piece
	in mm	in mm	in mm	in mm	in mm	in mm	in mm		in mm	in mm	
1/2	0.840 21.30	3.750 95.30	0.880 22.40	0.560 14.20	0.880 22.40	1.500 38.10	1.380 35.10	4	0.620 15.70	2.620 66.55	0.74
3/4	1.050 26.70	4.620 117.3	1.090 27.70	0.620 15.70	1.000 25.40	1.880 47.80	1.690 42.90	4	0.750 19.10	3.250 82.60	1.27
1	1.315 33.40	4.880 124.0	1.360 34.50	0.690 17.50	1.060 26.90	2.120 53.80	2.000 50.80	4	0.750 19.10	3.500 88.90	1.52
1 1/4	1.660 42.20	5.250 133.4	1.700 43.20	0.810 20.60	1.120 28.40	2.500 63.50	2.500 63.50	4	0.750 19.10	3.880 98.60	2.03
1 1/2	1.900 48.30	6.120 155.4	1.950 49.50	0.880 22.40	1.250 31.75	2.750 69.85	2.880 73.15	4	0.880 22.40	4.500 114.3	2.96
2	2.375 60.30	6.500 165.1	2.440 62.00	1.000 25.40	1.440 36.60	3.310 84.10	3.620 91.90	8	0.750 19.10	5.000 127.0	3.62
2 1/2	2.875 73.00	7.500 190.5	2.940 74.70	1.120 28.40	1.620 41.10	3.940 100.1	4.120 104.6	8	0.880 22.40	5.880 149.4	5.28
3	3.500 88.90	8.250 209.6	3.570 90.70	1.250 31.75	1.810 46.00	4.620 117.3	5.000 127.0	8	0.880 22.40	6.620 168.1	7.00
3 1/2	4.000 101.6	9.000 228.6	4.070 103.4	1.380 35.10	1.940 49.30	5.250 133.4	5.500 139.7	8	1.000 25.40	7.250 184.2	8.84
4	4.500 114.3	10.75 273.1	4.570 116.1	1.500 38.10	2.120 53.80	6.000 152.4	6.190 157.2	8	1.000 25.40	8.500 215.9	14.5
5	5.563 141.3	13.00 330.2	5.660 143.8	1.750 44.50	2.380 60.45	7.440 189.0	7.310 185.7	8	1.120 28.40	10.50 266.7	24.4
6	6.625 168.3	14.00 355.6	6.720 170.7	1.880 47.80	2.620 66.55	8.750 222.3	8.500 215.9	12	1.120 28.40	11.50 292.1	28.7
8	8.625 219.1	16.50 419.1	8.720 221.5	2.190 55.60	3.000 76.20	10.75 273.1	10.62 269.7	12	1.250 31.75	13.75 349.3	43.4
10	10.75 273.0	20.00 508.0	10.88 276.3	2.500 63.50	3.380 85.90	13.50 342.9	12.75 323.9	16	1.380 35.10	17.00 431.8	70.3
12	12.75 323.8	22.00 558.8	12.88 327.1	2.620 66.55	3.620 91.90	15.75 400.1	15.00 381.0	20	1.380 35.10	19.25 489.0	84.2
14	14.00 355.6	23.75 603.3	14.14 359.1	2.750 69.85	3.690 93.70	17.00 431.8	16.25 412.8	20	1.500 38.10	20.75 527.1	98.7
16	16.00 406.4	27.00 685.8	16.16 410.5	3.000 76.20	4.190 106.4	19.50 495.3	18.50 469.9	20	1.620 41.10	23.75 603.3	142
18	18.00 457.2	29.25 743.0	18.18 461.8	3.250 82.60	4.620 117.3	21.50 546.1	21.00 533.4	20	1.750 44.50	25.75 654.1	173
20	20.00 508.0	32.00 812.8	20.20 513.1	3.500 88.90	5.000 127.0	24.00 609.6	23.00 584.2	24	1.750 44.50	28.50 723.9	220
24	24.00 609.6	37.00 939.8	24.25 616.0	4.000 101.6	5.500 139.7	28.25 717.6	27.25 692.2	24	2.000 50.80	33.00 838.2	312

Notes
- Weights are based on manufacturer's data and are approximate.
- For ring joint facings see page 8-6.
- For tolerances see page 8-4.

Slip On Flanges - ANSI B16.5

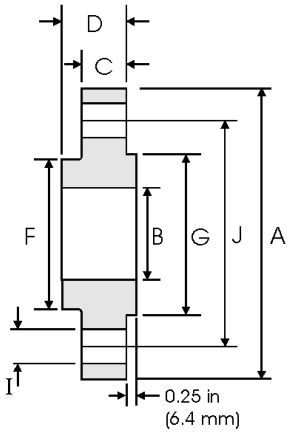

Class 900 lb

Pipe		Flange Data				Hub	Raised Face	Drilling Data			Weight
Nominal Pipe Size		A	B	C	D	F	G	H	I	J	
	Outside Diameter	Overall Diameter	Inside Diameter	Flange Thickness min	Overall Length	Hub Diameter	Face Diameter	Number of Holes	Bolt Hole Diameter	Diameter of Circle of Holes	kg/ piece
	in mm	in mm	in mm	in mm	in mm	in mm	in mm		in mm	in mm	
1/2	0.840 21.30	4.750 120.6	0.880 22.40	0.880 22.40	1.250 31.70	1.500 38.10	1.380 35.10	4	0.880 22.40	3.250 82.50	1.74
3/4	1.050 26.70	5.120 130.0	1.090 27.70	1.000 25.40	1.380 35.00	1.750 44.40	1.690 42.90	4	0.880 22.40	3.500 88.90	2.34
1	1.315 33.40	5.880 149.3	1.360 34.50	1.120 28.40	1.620 41.10	2.060 52.30	2.000 50.80	4	1.000 25.40	4.000 101.6	3.44
1 1/4	1.660 42.20	6.250 158.7	1.700 43.20	1.120 28.40	1.620 41.10	2.500 63.50	2.500 63.50	4	1.000 25.40	4.380 111.2	3.91
1 1/2	1.900 48.30	7.000 177.8	1.950 49.50	1.250 31.70	1.750 44.50	2.750 69.85	2.880 73.15	4	1.120 28.40	4.880 123.9	5.36
2	2.375 60.30	8.500 215.9	2.440 62.00	1.500 38.10	2.250 57.15	4.120 104.6	3.620 91.90	8	1.000 25.40	6.500 165.1	9.85
2 1/2	2.875 73.00	9.620 244.3	2.940 74.70	1.620 41.10	2.500 63.50	4.880 123.9	4.120 104.6	8	1.120 28.40	7.500 190.5	13.7
3	3.500 88.90	9.500 241.3	3.570 90.70	1.500 38.10	2.120 53.80	5.000 127.0	5.000 127.0	8	1.000 25.40	7.500 190.5	11.6
4	4.500 114.3	11.50 292.1	4.570 116.1	1.750 44.40	2.750 69.85	6.250 158.7	6.190 157.2	8	1.250 31.70	9.250 234.9	19.7
5	5.563 141.3	13.75 349.2	5.660 143.8	2.000 50.80	3.120 79.25	7.500 190.5	7.310 185.7	8	1.380 35.00	11.00 279.4	31.9
6	6.625 168.3	15.00 381.0	6.720 170.7	2.190 55.60	3.380 85.80	9.250 234.9	8.500 215.9	12	1.250 31.70	12.50 317.5	41.1
8	8.625 219.1	18.50 469.9	8.720 221.5	2.500 63.50	4.000 101.6	11.75 298.4	10.62 269.7	12	1.500 38.10	15.50 393.7	70.7
10	10.75 273.0	21.50 546.1	10.88 276.3	2.750 69.85	4.250 107.9	14.50 368.3	12.75 323.9	16	1.500 38.10	18.50 469.9	101
12	12.75 323.8	24.00 609.6	12.88 327.1	3.120 79.25	4.620 117.3	16.50 419.1	15.00 381.0	20	1.500 38.10	21.00 533.4	133
14	14.00 355.6	25.25 641.3	14.14 359.1	3.380 85.80	5.120 130.0	17.75 450.8	16.25 412.8	20	1.620 41.10	22.00 558.8	153
16	16.00 406.4	27.75 704.8	16.16 410.5	3.500 88.90	5.250 133.3	20.00 508.0	18.50 469.9	20	1.750 44.40	24.25 615.9	185
18	18.00 457.2	31.00 787.4	18.18 461.8	4.000 101.6	6.000 152.4	22.25 565.1	21.00 533.4	20	2.000 50.80	27.00 685.8	258
20	20.00 508.0	33.75 857.2	20.20 513.1	4.250 107.9	6.250 158.7	24.50 622.3	23.00 584.2	20	2.120 53.80	29.50 749.3	317
24	24.00 609.6	41.00 1041.4	24.25 616.0	5.500 139.7	8.000 203.2	29.50 749.3	27.25 692.2	20	2.620 66.55	35.50 901.7	606

Notes
- Weights are based on manufacturer's data and are approximate.
- For ring joint facings see page 8-6.
- For tolerances see page 8-4.

Slip On Flanges - ANSI B16.5

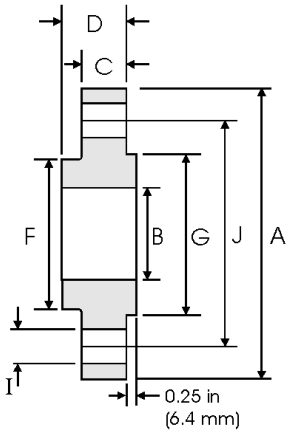

Class 1500 lb

Pipe		Flange Data				Hub	Raised Face	Drilling Data			Weight
Nominal Pipe Size		A	B	C	D	F	G	H	I	J	
	Outside Diameter	Overall Diameter	Inside Diameter	Flange Thickness min	Overall Length	Hub Diameter	Face Diameter	Number of Holes	Bolt Hole Diameter	Diameter of Circle of Holes	kg/ piece
	in mm	in mm	in mm	in mm	in mm	in mm	in mm		in mm	in mm	
1/2	0.840 21.30	4.750 120.6	0.880 22.40	0.880 22.40	1.250 31.70	1.500 38.10	1.380 35.10	4	0.880 22.40	3.250 82.50	1.74
3/4	1.050 26.70	5.120 130.0	1.090 27.70	1.000 25.40	1.380 35.00	1.750 44.40	1.690 42.90	4	0.880 22.40	3.500 88.90	2.34
1	1.315 33.40	5.880 149.3	1.360 34.50	1.120 28.40	1.620 41.10	2.060 52.30	2.000 50.80	4	1.000 25.40	4.000 101.6	3.44
1 1/4	1.660 42.20	6.250 158.7	1.700 43.20	1.120 28.40	1.620 41.10	2.500 63.50	2.500 63.50	4	1.000 25.40	4.380 111.2	3.91
1 1/2	1.900 48.30	7.000 177.8	1.950 49.50	1.250 31.70	1.750 44.50	2.750 69.85	2.880 73.15	4	1.120 28.40	4.880 123.9	5.36
2	2.375 60.30	8.500 215.9	2.440 62.00	1.500 38.10	2.250 57.15	4.120 104.6	3.620 91.90	8	1.000 25.40	6.500 165.1	9.85
2 1/2	2.875 73.00	9.620 244.3	2.940 74.70	1.620 41.10	2.500 63.50	4.880 123.9	4.120 104.6	8	1.120 28.40	7.500 190.5	13.7

Notes
- Weights are based on manufacturer's data and are approximate.
- For ring joint facings see page 8-6.
- For tolerances see page 8-4.

Blind Flanges - ANSI B16.5

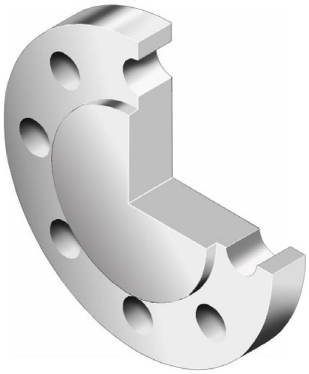

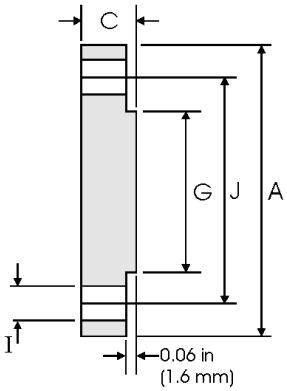

Class 150 lb

Pipe		Flange Data		Raised Face	Drilling Data			Weight
Nominal Pipe Size		A	C	G	H	I	J	
	Outside Diameter	Overall Diameter	Flange Thickness min	Face Diameter	Number of Holes	Bolt Hole Diameter	Diameter of Circle of Holes	kg/piece
	in mm	in mm	in mm	in mm		in mm	in mm	
1/2	0.840 21.30	3.500 88.90	0.440 11.20	1.380 35.10	4	0.620 15.70	2.380 60.45	0.42
3/4	1.050 26.70	3.880 98.60	0.500 12.70	1.690 42.90	4	0.620 15.70	2.750 69.85	0.61
1	1.315 33.40	4.250 108.0	0.560 14.20	2.000 50.80	4	0.620 15.70	3.120 79.25	0.86
1 1/4	1.660 42.20	4.620 117.3	0.620 15.70	2.500 63.50	4	0.620 15.70	3.500 88.90	1.17
1 1/2	1.900 48.30	5.000 127.0	0.690 17.50	2.880 73.15	4	0.620 15.70	3.880 98.60	1.53
2	2.375 60.30	6.000 152.4	0.750 19.10	3.620 91.90	4	0.750 19.10	4.750 120.7	2.42
2 1/2	2.875 73.00	7.000 177.8	0.880 22.40	4.120 104.6	4	0.750 19.10	5.500 139.7	3.94
3	3.500 88.90	7.500 190.5	0.940 23.90	5.000 127.0	4	0.750 19.10	6.000 152.4	4.93
3 1/2	4.000 101.6	8.500 215.9	0.940 23.90	5.500 139.7	8	0.750 19.10	7.000 177.8	6.17
4	4.500 114.3	9.000 228.6	0.940 23.90	6.190 157.2	8	0.750 19.10	7.500 190.5	7.00
5	5.563 141.3	10.00 254.0	0.940 23.90	7.310 185.7	8	0.880 22.40	8.500 215.9	8.63
6	6.625 168.3	11.00 279.4	1.000 25.40	8.500 215.9	8	0.880 22.40	9.500 241.3	11.3
8	8.625 219.1	13.50 342.9	1.120 28.40	10.62 269.7	8	0.880 22.40	11.75 298.5	19.6
10	10.75 273.0	16.00 406.4	1.190 30.20	12.75 323.9	12	1.000 25.40	14.25 362.0	28.8
12	12.75 323.8	19.00 482.6	1.250 31.75	15.00 381.0	12	1.000 25.40	17.00 431.8	43.2
14	14.00 355.6	21.00 533.4	1.380 35.10	16.25 412.8	12	1.120 28.40	18.75 476.3	58.1
16	16.00 406.4	23.50 596.9	1.440 36.60	18.50 469.9	16	1.120 28.40	21.25 539.8	76.0
18	18.00 457.2	25.00 635.0	1.560 39.60	21.00 533.4	16	1.250 31.75	22.75 577.9	93.7
20	20.00 508.0	27.50 698.5	1.690 42.90	23.00 584.2	20	1.250 31.75	25.00 635.0	122
24	24.00 609.6	32.00 812.8	1.880 47.80	27.25 692.2	20	1.380 35.10	29.50 749.3	185

Notes
- Weights are based on manufacturer's data and are approximate.
- Flat face flanges may be provided at full thickness, C, or with raised face removed (the latter is nonstandard).
- For ring joint facings see page 8-6.
- For tolerances see page 8-4.

Blind Flanges - ANSI B16.5

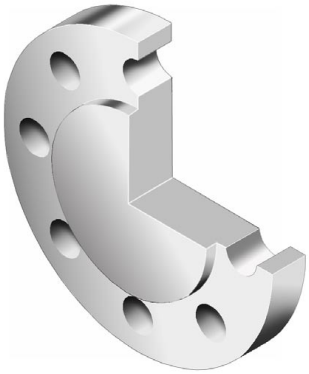

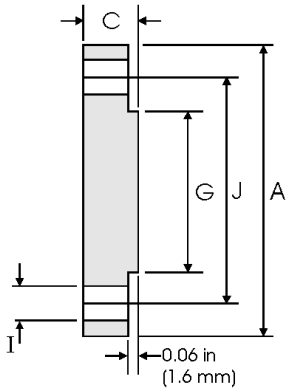

Class 300 lb

Pipe		Flange Data		Raised Face	Drilling Data			Weight
Nominal Pipe Size		A	C	G	H	I	J	
	Outside Diameter	Overall Diameter	Flange Thickness min	Face Diameter	Number of Holes	Bolt Hole Diameter	Diameter of Circle of Holes	kg/piece
	in mm	in mm	in mm	in mm		in mm	in mm	
1/2	0.840 21.30	3.750 95.20	0.560 14.20	1.380 35.10	4	0.620 15.70	2.620 66.55	0.64
3/4	1.050 26.70	4.620 117.3	0.620 15.70	1.690 42.90	4	0.750 19.00	3.250 82.50	1.11
1	1.315 33.40	4.880 123.9	0.690 17.50	2.000 50.80	4	0.750 19.00	3.500 88.90	1.39
1 1/4	1.660 42.20	5.250 133.3	0.750 19.00	2.500 63.50	4	0.750 19.00	3.880 98.50	1.79
1 1/2	1.900 48.30	6.120 155.4	0.810 20.60	2.880 73.15	4	0.880 22.3	4.500 114.3	2.66
2	2.375 60.30	6.500 165.1	0.880 22.30	3.620 91.90	8	0.750 19.10	5.000 127.0	3.18
2 1/2	2.875 73.00	7.500 190.5	1.000 25.40	4.120 104.6	8	0.880 22.30	5.880 1.493	4.85
3	3.500 88.90	8.250 209.5	1.120 28.40	5.000 127.0	8	0.880 22.30	6.620 168.1	6.81
3 1/2	4.000 101.6	9.000 228.6	1.190 30.20	5.500 139.7	8	0.880 22.30	7.250 184.1	8.71
4	4.500 114.3	10.00 254.0	1.250 31.70	6.190 157.2	8	0.880 22.30	7.800 200.1	11.5
5	5.563 141.3	11.00 279.4	1.380 35.00	7.310 185.7	8	0.880 22.30	9.250 234.9	15.6
6	6.625 168.3	12.50 317.5	1.440 36.50	8.500 215.9	12	0.880 22.30	10.62 269.7	20.9
8	8.625 219.1	15.00 381.0	1.620 41.10	10.62 269.7	12	1.000 25.40	13.00 330.2	34.3
10	10.75 273.0	17.50 444.5	1.880 47.70	12.75 323.9	16	1.120 28.40	15.25 387.3	53.3
12	12.75 323.8	20.50 520.7	2.000 50.80	15.00 381.0	16	1.250 31.70	17.75 450.8	78.8
14	14.00 355.6	23.00 584.2	2.120 53.80	16.25 412.8	20	1.250 31.70	20.25 514.3	105
16	16.00 406.4	25.50 647.7	2.250 57.15	18.50 469.9	20	1.380 35.00	22.50 571.5	137
18	18.00 457.2	28.00 711.2	2.380 60.45	21.00 533.4	24	1.380 35.00	24.75 628.6	175
20	20.00 508.0	30.50 774.7	2.500 63.50	23.00 584.2	24	1.380 35.00	27.00 685.8	221
24	24.00 609.6	36.00 914.4	2.750 69.85	27.25 692.2	24	1.620 41.10	32.00 812.8	339

Notes
- Weights are based on manufacturer's data and are approximate.
- Flat face flanges may be provided at full thickness, C, or with raised face removed (the latter is nonstandard).
- For ring joint facings see page 8-6.
- For tolerances see page 8-4.

Blind Flanges - ANSI B16.5

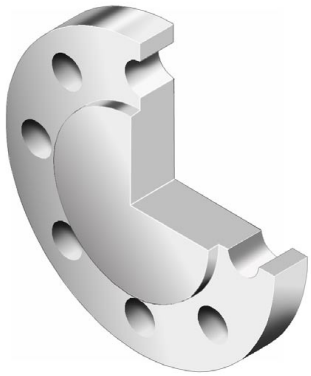

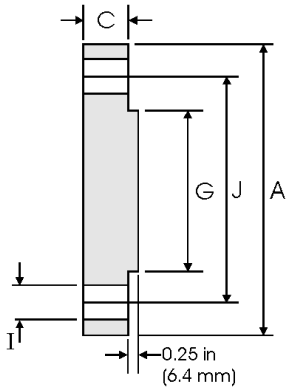

Class 400 lb

Pipe		Flange Data		Raised Face	Drilling Data			Weight
Nominal Pipe Size		A	C	G	H	I	J	
	Outside Diameter	Overall Diameter	Flange Thickness min	Face Diameter	Number of Holes	Bolt Hole Diameter	Diameter of Circle of Holes	kg/piece
	in mm	in mm	in mm	in mm		in mm	in mm	
1/2	0.840 21.30	3.750 95.20	0.560 14.20	1.380 35.10	4	0.620 15.70	2.620 66.55	0.76
3/4	1.050 26.70	4.620 117.3	0.620 15.70	1.690 42.90	4	0.750 19.10	3.250 82.60	1.28
1	1.315 33.40	4.880 123.9	0.690 17.50	2.000 50.80	4	0.750 19.10	3.500 88.90	1.60
1/4	1.660 42.20	5.250 133.3	0.810 20.60	2.500 63.50	4	0.750 19.10	3.880 98.60	2.23
1/2	1.900 48.30	6.120 155.4	0.880 22.30	2.880 73.15	4	0.880 22.40	4.500 114.3	3.25
2	2.375 60.30	6.500 165.1	1.000 25.40	3.620 91.90	8	0.750 19.10	5.000 127.0	4.15
2 1/2	2.875 73.00	7.500 190.5	1.120 28.40	4.120 104.6	8	0.880 22.40	5.880 149.4	6.13
3	3.500 88.90	8.250 209.5	1.250 31.70	5.000 127.0	8	0.880 22.40	6.620 168.1	8.44
3 1/2	4.000 101.6	9.000 228.6	1.380 35.00	5.500 139.7	8	1.000 25.40	7.250 184.2	11.0
4	4.500 114.3	10.00 254.0	1.380 35.10	6.190 157.2	8	1.000 25.40	7.880 200.2	13.7
5	5.563 141.3	11.00 279.4	1.500 38.10	7.310 185.7	8	1.000 25.40	9.250 235.0	18.5
6	6.625 168.3	12.50 317.5	1.620 41.10	8.500 215.9	12	1.000 25.40	10.62 269.7	25.5
8	8.625 219.1	15.00 381.0	1.880 47.80	10.62 269.7	12	1.120 28.40	13.00 330.2	42.6
10	10.75 273.0	17.50 444.5	2.120 53.80	12.75 323.9	16	1.250 31.75	15.25 387.4	64.5
12	12.75 323.8	20.50 520.7	2.250 57.15	15.00 381.0	16	1.380 35.10	17.75 450.9	94.30
14	14.00 355.6	23.00 584.2	2.380 60.45	16.25 412.8	20	1.380 35.10	20.25 514.4	124
16	16.00 406.4	25.50 647.7	2.500 63.50	18.50 469.9	20	1.500 38.10	22.50 571.5	162
18	18.00 457.2	28.00 711.2	2.620 66.55	21.00 533.4	24	1.500 38.10	24.75 628.7	205
20	20.00 508.0	30.50 774.7	2.750 69.85	23.00 584.2	24	1.620 41.10	27.00 685.8	254
24	24.00 609.6	36.00 914.4	3.000 76.20	27.25 692.2	24	1.880 47.80	32.00 812.8	386

Notes
- Weights are based on manufacturer's data and are approximate.
- For ring joint facings see page 8-6.
- For tolerances see page 8-4.

Blind Flanges - ANSI B16.5

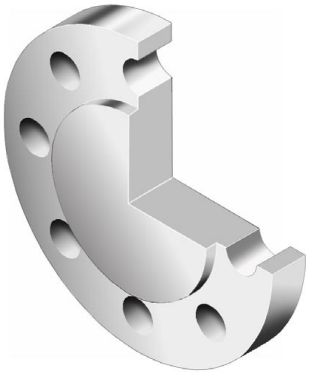

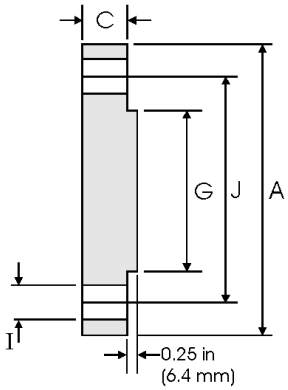

Class 600 lb

Pipe		Flange Data		Raised Face	Drilling Data			Weight
Nominal Pipe Size	Outside Diameter	Overall Diameter	Flange Thickness min	Face Diameter	Number of Holes	Bolt Hole Diameter	Diameter of Circle of Holes	kg/piece
	in mm	in mm	in mm	in mm		in mm	in mm	
1/2	0.840 21.30	3.750 95.20	0.560 14.20	1.380 35.10	4	0.620 15.70	2.620 66.55	0.76
3/4	1.050 26.70	4.620 117.3	0.620 15.70	1.690 42.90	4	0.750 19.10	3.250 82.60	1.28
1	1.315 33.40	4.880 123.9	0.690 17.50	2.000 50.80	4	0.750 19.10	3.500 88.90	1.60
1 1/4	1.660 42.20	5.250 133.3	0.810 20.60	2.500 63.50	4	0.750 19.10	3.880 98.60	2.23
1 1/2	1.900 48.30	6.120 155.4	0.880 22.30	2.880 73.15	4	0.880 22.40	4.500 114.3	3.25
2	2.375 60.30	6.500 165.1	1.000 25.40	3.620 91.90	8	0.750 19.10	5.000 127.0	4.15
2 1/2	2.875 73.00	7.500 190.5	1.120 28.40	4.120 104.6	8	0.880 22.40	5.880 149.4	6.13
3	3.500 88.90	8.250 209.5	1.250 31.70	5.000 127.0	8	0.880 22.40	6.620 168.1	8.44
3 1/2	4.000 101.6	9.000 228.6	1.380 35.00	5.500 139.7	8	1.000 25.40	7.250 184.2	11.0
4	4.500 114.3	10.75 273.1	1.500 38.10	6.190 157.2	8	1.000 25.40	8.500 215.9	17.3
5	5.563 141.3	13.00 330.2	1.750 44.50	7.310 185.7	8	1.120 28.40	10.50 266.7	29.4
6	6.625 168.3	14.00 355.6	1.880 47.80	8.500 215.9	12	1.120 28.40	11.50 292.1	36.1
8	8.625 219.1	16.50 419.1	2.190 55.60	10.62 269.7	12	1.250 31.75	13.75 349.3	58.9
10	10.75 273.0	20.00 508.0	2.500 63.50	12.75 323.9	16	1.380 35.10	17.00 431.8	97.5
12	12.75 323.8	22.00 558.8	2.620 66.55	15.00 381.0	20	1.380 35.10	19.25 489.0	124
14	14.00 355.6	23.75 603.3	2.750 69.85	16.25 412.8	20	1.500 38.10	20.75 527.1	151
16	16.00 406.4	27.00 685.8	3.000 76.20	18.50 469.9	20	1.620 41.10	23.75 603.3	214
18	18.00 457.2	29.25 743.0	3.250 82.60	21.00 533.4	20	1.750 44.50	25.75 654.1	272
20	20.00 508.0	32.00 812.8	3.500 88.90	23.00 584.2	24	1.750 44.50	28.50 723.9	349
24	24.00 609.6	37.00 939.8	4.000 101.6	27.25 692.2	24	2.000 50.80	33.00 838.2	533

Notes
- Weights are based on manufacturer's data and are approximate.
- For ring joint facings see page 8-6.
- For tolerances see page 8-4.

Blind Flanges - ANSI B16.5

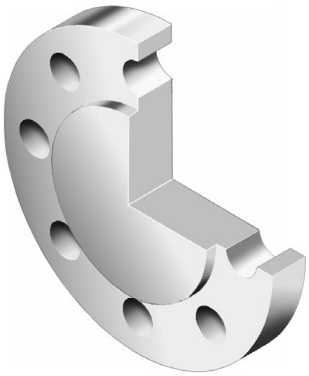

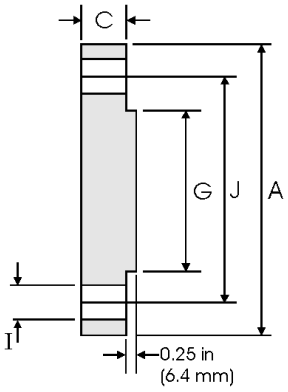

Class 900 lb

Pipe		Flange Data		Raised Face	Drilling Data			Weight
Nominal Pipe Size		A	C	G	H	I	J	
	Outside Diameter	Overall Diameter	Flange Thickness min	Face Diameter	Number of Holes	Bolt Hole Diameter	Diameter of Circle of Holes	kg/piece
	in mm	in mm	in mm	in mm		in mm	in mm	
1/2	0.840 21.30	4.750 120.6	0.880 22.30	1.380 35.10	4	0.880 22.30	3.250 82.50	1.77
3/4	1.050 26.70	5.120 130.0	1.000 25.40	1.690 42.90	4	0.880 22.30	3.500 88.90	2.42
1	1.315 33.40	5.880 149.3	1.120 28.40	2.000 50.80	4	1.000 25.40	4.000 101.6	3.57
1 1/4	1.660 42.20	6.250 158.7	1.120 28.40	2.500 63.50	4	1.000 25.40	4.380 111.2	4.15
1 1/2	1.900 48.30	7.000 177.8	1.250 31.70	2.880 73.15	4	1.120 28.40	4.880 123.9	5.75
2	2.375 60.30	8.500 215.9	1.500 38.10	3.620 91.90	8	1.000 25.40	6.500 165.1	10.1
2 1/2	2.875 73.00	9.620 244.3	1.620 41.10	4.120 104.6	8	1.120 28.40	7.500 190.5	14.0
3	3.500 88.90	9.500 241.3	1.500 38.10	5.000 127.0	8	1.000 25.40	7.500 190.5	13.1
4	4.500 114.3	11.50 292.1	1.750 44.50	6.190 157.2	8	1.250 31.70	9.250 234.9	26.9
5	5.563 141.3	13.75 349.2	2.000 50.80	7.310 185.7	8	1.380 35.00	11.00 279.4	36.5
6	6.625 168.3	15.00 381.0	2.190 55.60	8.500 215.9	12	1.250 31.70	12.50 317.0	47.40
8	8.625 219.1	18.50 469.9	2.500 63.50	10.62 269.7	12	1.500 38.10	15.50 393.7	82.5
10	10.75 273.0	21.50 546.1	2.750 69.85	12.75 323.9	16	1.500 38.10	18.50 469.9	122
12	12.75 323.8	24.00 609.6	3.120 79.25	15.00 381.0	20	1.500 38.10	21.00 533.4	173
14	14.00 355.6	25.25 641.3	3.380 85.80	16.25 412.8	20	1.620 41.10	22.00 558.8	206
16	16.00 406.4	27.75 704.8	3.500 88.90	18.50 469.9	20	1.750 44.40	24.25 615.9	259
18	18.00 457.2	31.00 787.4	4.000 101.6	21.00 533.4	20	2.000 50.80	27.00 685.8	367
20	20.00 508.0	33.75 857.2	4.250 107.9	23.00 584.2	20	2.120 53.80	29.50 749.3	463
24	24.00 609.6	41.00 1041.4	5.500 139.7	27.25 692.2	20	2.620 66.55	35.50 901.7	876

Notes
- Weights are based on manufacturer's data and are approximate.
- For ring joint facings see page 8-6.
- For tolerances see page 8-4.

Blind Flanges - ANSI B16.5

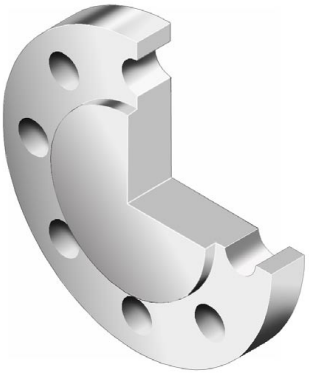

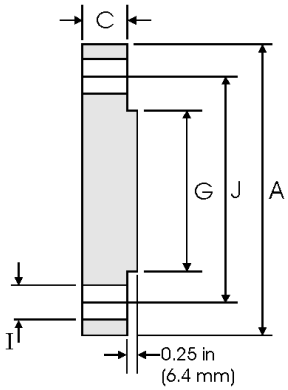

Class 1500 lb

Pipe		Flange Data		Raised Face	Drilling Data			Weight
Nominal Pipe Size		A	C	G	H	I	J	
	Outside Diameter	Overall Diameter	Flange Thickness min	Face Diameter	Number of Holes	Bolt Hole Diameter	Diameter of Circle of Holes	kg/piece
	in mm	in mm	in mm	in mm		in mm	in mm	
1/2	0.840 21.30	4.750 120.6	0.880 22.30	1.380 35.10	4	0.880 22.30	3.250 82.50	1.77
3/4	1.050 26.70	5.120 130.0	1.000 25.40	1.690 42.90	4	0.880 22.30	3.500 88.90	2.42
1	1.315 33.40	5.880 149.3	1.120 28.40	2.000 50.80	4	1.000 25.40	4.000 101.6	3.57
1 1/4	1.660 42.20	6.250 158.7	1.120 28.40	2.500 63.50	4	1.000 25.40	4.380 111.2	4.15
1 1/2	1.900 48.30	7.000 177.8	1.250 31.70	2.880 73.15	4	1.120 28.40	4.880 123.9	5.75
2	2.375 60.30	8.500 215.9	1.500 38.10	3.620 91.90	8	1.000 25.40	6.500 165.1	10.1
2 1/2	2.875 73.00	9.620 244.3	1.620 41.10	4.120 104.6	8	1.120 28.40	7.500 190.5	14.0
3	3.500 88.90	10.50 266.7	1.880 47.70	5.000 127.0	8	1.250 31.70	8.000 203.2	19.1
4	4.500 114.3	12.25 311.1	2.120 53.80	6.190 157.2	8	1.380 35.00	9.500 241.3	29.9
5	5.563 141.3	14.75 374.6	2.880 73.15	7.310 185.7	8	1.620 41.10	11.50 292.1	58.4
6	6.625 168.3	15.50 393.7	3.250 82.50	8.500 215.9	12	1.500 38.10	12.50 317.5	71.8
8	8.625 219.1	19.00 482.6	3.620 91.90	10.62 269.7	12	1.750 44.40	15.50 393.7	122
10	10.75 273.0	23.00 584.2	4.250 107.9	12.75 323.9	12	2.000 50.80	19.00 482.6	210
12	12.75 323.8	26.50 673.1	4.880 123.9	15.00 381.0	16	2.120 53.8	22.50 571.5	316
14	14.00 355.6	29.50 749.3	5.250 133.3	16.25 412.8	16	2.380 60.45	25.00 635.0	420
16	16.00 406.4	32.50 825.5	5.750 146.0	18.50 469.9	16	2.620 66.55	27.75 704.8	558
18	18.00 457.2	36.00 914.4	6.380 162.0	21.00 533.4	16	2.880 73.15	30.50 774.7	760
20	20.00 508.0	38.75 984.2	7.000 177.8	23.00 584.2	16	3.120 79.25	32.75 831.8	965
24	24.00 609.6	46.00 1168.4	8.000 203.2	27.25 692.2	16	3.620 91.90	39.00 990.6	1558

Notes
- Weights are based on manufacturer's data and are approximate.
- For ring joint facings see page 8-6.
- For tolerances see page 8-4.

Blind Flanges - ANSI B16.5

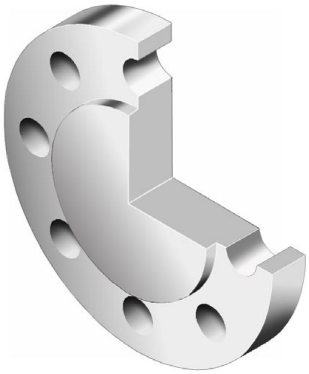

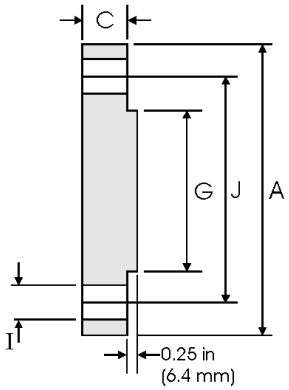

Class 2500 lb

Pipe		Flange Data		Raised Face	Drilling Data			Weight
Nominal Pipe Size		A	C	G	H	I	J	
	Outside Diameter	Overall Diameter	Flange Thickness min	Face Diameter	Number of Holes	Bolt Hole Diameter	Diameter of Circle of Holes	kg/piece
	in mm	in mm	in mm	in mm		in mm	in mm	
1/2	0.840 21.30	5.250 133.4	1.190 30.20	1.380 35.10	4	0.880 22.40	3.500 88.90	2.99
3/4	1.050 26.70	5.500 139.7	1.250 31.70	1.690 42.90	4	0.880 22.40	3.750 95.30	3.50
1	1.315 33.40	6.250 158.8	1.380 35.10	2.000 50.80	4	1.000 25.40	4.250 108.0	4.96
1 1/4	1.660 42.20	7.250 184.2	1.500 38.10	2.500 63.50	4	1.120 28.40	5.120 130.0	7.35
1 1/2	1.900 48.30	8.000 203.2	1.750 44.50	2.880 73.15	4	1.250 31.75	5.750 146.1	10.4
2	2.375 60.30	9.250 235.0	2.000 50.80	3.620 91.90	8	1.120 28.40	6.750 171.5	15.6
2 1/2	2.875 73.00	10.50 266.7	2.250 57.15	4.120 104.6	8	1.250 31.75	7.750 196.9	22.6
3	3.500 88.90	12.00 304.8	2.620 66.55	5.000 127.0	8	1.380 35.10	9.000 228.6	34.8
4	4.500 114.3	14.00 355.6	3.000 76.20	6.190 157.2	8	1.620 41.10	10.75 273.1	53.9
5	5.563 141.3	16.50 419.1	3.620 91.90	7.310 185.7	8	1.888 47.88	12.75 323.9	90.8
6	6.625 168.3	19.00 482.6	4.250 108.0	8.500 215.9	8	2.120 53.80	14.50 368.3	141
8	8.625 219.1	21.75 552.5	5.000 127.0	10.62 269.7	12	2.120 53.80	17.25 438.2	214
10	10.75 273.0	26.50 673.1	6.500 165.1	12.75 323.9	12	2.620 66.55	21.25 539.8	411
12	12.75 323.8	30.00 762.0	7.250 184.2	15.00 381.0	12	2.880 73.15	24.38 619.3	592

Notes
- Weights are based on manufacturer's data and are approximate.
- For ring joint facings see page 8-6.
- For tolerances see page 8-4.

Socket Welding Flanges - ANSI B16.5

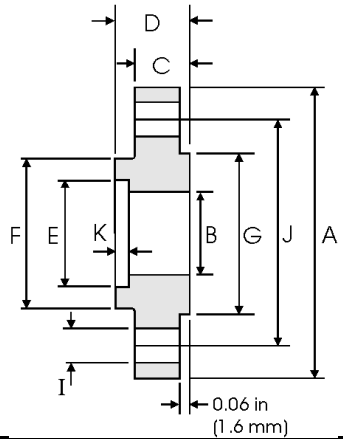

Class 150 lb

Pipe		Flange						Hub	Raised Face	Drilling Data			Weight
Nominal Pipe Size		A	B	C	D	E	K	F	G	H	I	J	
	Outside Diameter	Overall Diameter	Inside Diameter	Flange Thickness min	Overall Length	Socket Diameter	Depth of Socket	Hub Diameter	Face Diameter	No. of Holes	Bolt Hole Diameter		piece
	in mm	in mm	in mm	in mm	in mm	in mm	in mm	in mm	in mm		in mm	in mm	
1/2	0.840 21.30	3.500 88.90	0.620 15.70	0.440 11.20	0.620 15.70	0.880 22.40	0.380 9.600	1.190 30.20	1.380 35.10	4	0.620 15.70	2.380 60.45	0.42
3/4	1.050 26.70	3.880 98.60	0.820 20.80	0.500 12.70	0.620 15.70	1.090 27.70	0.440 11.10	1.500 38.10	1.690 42.90	4	0.620 15.70	2.750 69.85	0.59
1	1.315 33.40	4.250 108.0	1.050 26.70	0.560 14.20	0.690 17.50	1.360 34.50	0.500 12.70	1.940 49.30	2.000 50.80	4	0.620 15.70	3.120 79.25	0.81
1 1/4	1.660 42.20	4.620 117.3	1.380 35.10	0.620 15.70	0.810 20.60	1.700 43.20	0.560 14.20	2.310 58.70	2.500 63.50	4	0.620 15.70	3.500 88.90	1.07
1 1/2	1.900 48.30	5.000 127.0	1.610 40.90	0.690 17.50	0.880 22.30	1.950 49.50	0.620 15.70	2.560 65.00	2.880 73.15	4	0.620 15.70	3.880 98.60	1.36
2	2.375 60.30	6.000 152.4	2.070 52.60	0.750 19.10	1.000 25.40	2.440 62.00	0.690 17.50	3.060 77.70	3.620 91.90	4	0.750 19.10	4.750 120.7	2.10
2 1/2	2.875 73.00	7.000 177.8	2.470 62.70	0.880 22.40	1.120 28.40	2.940 74.70	0.750 19.00	3.560 90.40	4.120 104.6	4	0.750 19.10	5.500 139.7	3.33
3	3.500 88.90	7.500 190.5	3.070 78.00	0.940 23.90	1.190 30.20	3.570 90.70	0.810 20.60	4.250 108.0	5.000 127.0	4	0.750 19.10	6.000 152.4	3.90

Class 300 lb

Pipe		Flange						Hub	Raised Face	Drilling Data			Weight
Nominal Pipe Size		A	B	C	D	E	K	F	G	H	I	J	
	Outside Diameter	Overall Diameter	Inside Diameter	Flange Thickness min	Overall Length	Socket Diameter	Depth of Socket	Hub Diameter	Face Diameter	No. of Holes	Bolt Hole Diameter		piece
	in mm	in mm	in mm	in mm	in mm	in mm	in mm	in mm	in mm		in mm	in mm	
1/2	0.840 21.30	3.750 95.20	0.620 15.70	0.560 14.20	0.880 22.30	0.880 22.40	0.380 9.600	1.500 38.10	1.380 35.10	4	0.620 15.70	2.620 66.55	0.66
3/4	1.050 26.70	4.620 117.3	0.820 20.80	0.620 15.70	1.000 25.40	1.090 27.70	0.440 11.10	1.880 47.70	1.690 42.90	4	0.750 19.10	3.250 82.50	1.15
1	1.315 33.40	4.880 123.9	1.050 26.70	0.690 17.50	1.060 26.90	1.360 34.50	0.500 12.70	2.120 53.80	2.000 50.80	4	0.750 19.10	3.500 88.90	1.40
1 1/4	1.660 42.20	5.250 133.3	1.380 35.10	0.750 19.00	1.060 26.90	1.700 43.20	0.560 14.20	2.500 63.50	2.500 63.50	4	0.750 19.10	3.880 98.60	1.75
1 1/2	1.900 48.30	6.120 155.4	1.610 40.90	0.810 20.60	1.190 30.20	1.950 49.50	0.620 15.70	2.750 69.85	2.880 73.15	4	0.880 22.30	4.500 114.3	2.55
2	2.375 60.30	6.500 165.1	2.070 52.60	0.880 22.30	1.310 33.20	2.440 62.00	0.690 17.50	3.310 84.00	3.620 91.90	8	0.750 19.10	5.000 127.0	2.93
2 1/2	2.875 73.00	7.500 190.5	2.470 62.70	1.000 25.40	1.500 38.10	2.940 74.70	0.750 19.00	3.940 100.0	4.120 104.6	8	0.880 22.30	5.880 149.3	4.40
3	3.500 88.90	8.250 209.5	3.070 78.00	1.120 28.40	1.690 42.90	3.570 90.70	0.810 20.60	4.620 117.3	5.000 127.0	8	0.880 22.30	6.620 168.1	5.92

Notes
- Dimension B corresponds to the pipe inside diameter. Values quoted assume 40S/Standard wall thickness.
- Weights are based on manufacturer's data and are approximate.
- For ring joint facings see page 8-6. For tolerances see page 8-4.

Socket Welding Flanges - ANSI B16.5

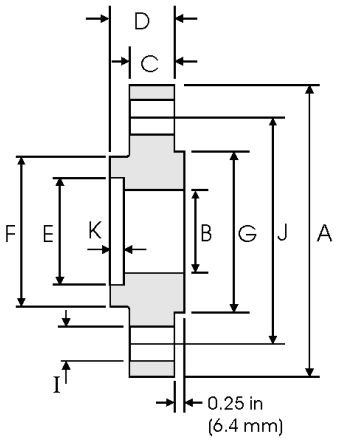

Class 600 lb

Pipe		Flange						Hub	Raised Face	Drilling Data			Weight
Nominal Pipe Size		A	B	C	D	E	K	F	G	H	I	J	
	Outside Diameter	Overall Diameter	Inside Diameter	Flange Thickness min	Overall Length	Socket Diameter	Depth of Socket	Hub Diameter	Face Diameter	No. of Holes	Bolt Hole Diameter		
	in mm	in mm	in mm	in mm	in mm	in mm	in mm	in mm	in mm		in mm	in mm	
1/2	0.840 21.30	3.750 95.20	To be specified by the Purchaser	0.560 14.20	0.880 22.30	0.880 22.40	0.380 9.600	1.500 38.10	1.380 35.10	4	0.620 15.70	2.620 66.55	0.76
3/4	1.050 26.70	4.620 117.3		0.620 15.70	1.000 25.40	1.090 27.70	0.440 11.10	1.880 47.70	1.690 42.90	4	0.750 19.10	3.250 82.50	1.29
1	1.315 33.40	4.880 123.9		0.690 17.50	1.060 26.90	1.360 34.50	0.500 12.70	2.120 53.80	2.000 50.80	4	0.750 19.10	3.500 88.90	1.55
1 1/4	1.660 42.20	5.250 133.3		0.810 20.60	1.120 28.40	1.700 43.20	0.560 14.20	2.500 63.50	2.500 63.50	4	0.750 19.10	3.880 98.60	2.06
1 1/2	1.900 48.30	6.120 155.4		0.880 22.30	1.250 31.75	1.950 49.50	0.620 15.70	2.750 69.85	2.880 73.15	4	0.880 22.30	4.500 114.3	3.00
2	2.375 60.30	6.500 165.1		1.000 25.40	1.440 36.60	2.440 62.00	0.690 17.50	3.310 84.00	3.620 91.90	8	0.750 19.10	5.000 127.0	3.67
2 1/2	2.875 73.00	7.500 190.5		1.120 28.40	1.620 41.10	2.940 74.70	0.750 19.00	3.940 100.0	4.120 104.6	8	0.880 22.30	5.880 149.3	5.35
3	3.500 88.90	8.250 209.5		1.250 31.75	1.810 46.00	3.570 90.70	0.810 20.60	4.620 117.3	5.000 127.0	8	0.880 22.30	6.620 168.1	7.06

Class 1500 lb

Pipe		Flange						Hub	Raised Face	Drilling Data			Weight
Nominal Pipe Size		A	B	C	D	E	K	F	G	H	I	J	
	Outside Diameter	Overall Diameter	Inside Diameter	Flange Thickness min	Overall Length	Socket Diameter	Depth of Socket	Hub Diameter	Face Diameter	No. of Holes	Bolt Hole Diameter	Diameter of Circle of Holes	kg/ piece
	in mm	in mm	in mm	in mm	in mm	in mm	in mm	in mm	in mm		in mm	in mm	
1/2	0.840 21.30	4.750 120.6	To be specified by the Purchaser	0.880 22.30	1.250 31.70	0.880 22.40	0.380 9.600	1.500 38.10	1.380 35.10	4	0.880 22.30	3.250 82.50	1.80
3/4	1.050 26.70	5.120 130.0		1.000 25.40	1.380 35.00	1.090 27.70	0.440 11.10	1.750 44.40	1.690 42.90	4	0.880 22.30	3.500 88.90	2.41
1	1.315 33.40	5.880 149.3		1.120 28.40	1.620 41.10	1.360 34.50	0.500 12.70	2.060 52.30	2.000 50.80	4	1.000 25.40	4.000 101.6	3.55
1 1/4	1.660 42.20	6.250 158.7		1.120 28.40	1.620 41.10	1.700 43.20	0.560 14.20	2.500 63.50	2.500 63.50	4	1.000 25.40	4.380 111.2	4.02
1 1/2	1.900 48.30	7.000 177.8		1.250 31.75	1.750 44.50	1.950 49.50	0.620 15.70	2.750 69.85	2.880 73.15	4	1.120 28.40	4.880 123.9	5.45
2	2.375 60.30	8.500 215.9		1.500 38.10	2.250 57.15	2.440 62.00	0.690 17.50	4.120 104.6	3.620 91.90	8	1.000 25.40	6.500 165.1	10.2
2 1/2	2.875 73.00	9.620 244.3		1.620 41.10	2.500 63.50	2.940 74.70	0.750 19.00	4.880 123.9	4.120 104.6	8	1.120 28.40	7.500 190.5	13.9

Notes
- Class 400 socket weld flanges may be provided in NPS 1/2 to 2 1/2 using Class 600 dimensions
- Dimension B corresponds to the pipe inside diameter. Values quoted assume 40S/Standard wall thickness.
- Weights are based on manufacturer's data and are approximate.
- For ring joint facings see page 8-6. For tolerances see page 8-4.

Lap Joint Flanges - ANSI B16.5

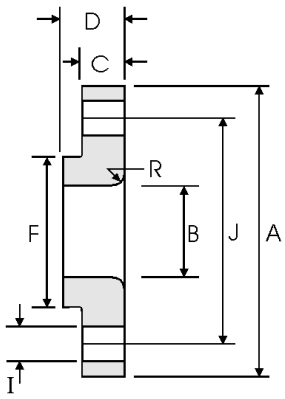

Class 150 lb

Pipe		Flange Data				Lap	Hub	Drilling Data			Weight
Nominal Pipe Size		A	B	C	D	R	F	H	I	J	
	Outside Diameter	Overall Diameter	Inside Diameter	Flange Thickness min	Overall Length	Lap Radius	Hub Diameter	Number of Holes	Bolt Hole Diameter	Diameter of Circle of Holes	kg/ piece
	in mm	in mm	in mm	in mm	in mm	in mm	in mm		in mm	in mm	
1/2	0.840 21.30	3.500 88.90	0.900 22.90	0.440 11.20	0.620 15.70	0.120 3.000	1.190 30.20	4	0.620 15.70	2.380 60.45	0.38
3/4	1.050 26.70	3.880 98.60	1.110 28.20	0.500 12.70	0.620 15.70	0.120 3.000	1.500 38.10	4	0.620 15.70	2.750 69.85	0.55
1	1.315 33.40	4.250 108.0	1.380 35.10	0.560 14.20	0.690 17.50	0.120 3.000	1.940 49.30	4	0.620 15.70	3.120 79.25	0.76
1 1/4	1.660 42.20	4.620 117.3	1.720 43.70	0.620 15.70	0.810 20.60	0.190 4.800	2.310 58.70	4	0.620 15.70	3.500 88.90	1.01
1 1/2	1.900 48.30	5.000 127.0	1.970 50.00	0.690 17.50	0.880 22.40	0.250 6.400	2.560 65.00	4	0.620 15.70	3.880 98.60	1.30
2	2.375 60.30	6.000 152.4	2.460 62.50	0.750 19.10	1.000 25.40	0.310 7.900	3.060 77.70	4	0.750 19.10	4.750 120.7	2.03
2 1/2	2.875 73.00	7.000 177.8	2.970 75.40	0.880 22.40	1.120 28.40	0.310 7.900	3.560 90.40	4	0.750 19.10	5.500 139.7	3.25
3	3.500 88.90	7.500 190.5	3.600 91.40	0.940 23.90	1.190 30.20	0.380 9.700	4.250 108.0	4	0.750 19.10	6.000 152.4	3.81
3 1/2	4.000 101.6	8.500 215.9	4.100 104.1	0.940 23.90	1.250 31.75	0.380 9.700	4.810 122.2	8	0.750 19.10	7.000 177.8	4.76
4	4.500 114.3	9.000 228.6	4.600 116.8	0.940 23.90	1.310 33.30	0.440 11.20	5.310 134.9	8	0.750 19.10	7.500 190.5	5.25
5	5.563 141.3	10.00 254.0	5.690 114.5	0.940 23.90	1.440 36.60	0.440 11.20	6.440 163.6	8	0.880 22.40	8.500 215.9	6.02
6	6.625 168.3	11.00 279.4	6.750 171.5	1.000 25.40	1.560 39.60	0.500 12.70	7.560 192.0	8	0.880 22.40	9.500 241.3	7.40
8	8.625 219.1	13.50 342.9	8.750 222.3	1.120 28.40	1.750 44.50	0.500 12.70	9.690 246.1	8	0.880 22.40	11.75 298.5	12.1
10	10.75 273.0	16.00 406.4	10.92 277.4	1.190 30.20	1.940 49.30	0.500 12.70	12.00 304.8	12	1.000 25.40	14.25 362.0	16.4
12	12.75 323.8	19.00 482.6	12.92 328.2	1.250 31.75	2.190 55.60	0.500 12.70	14.38 365.3	12	1.000 25.40	17.00 431.8	26.1
14	14.00 355.6	21.00 533.4	14.18 360.2	1.380 35.10	3.120 79.25	0.500 12.70	15.75 400.1	12	1.120 28.40	18.75 476.3	34.5
16	16.00 406.4	23.50 596.9	16.19 411.2	1.440 36.60	3.440 87.40	0.500 12.70	18.00 457.2	16	1.120 28.40	21.25 539.8	44.6
18	18.00 457.2	25.00 635.0	18.20 462.3	1.560 39.60	3.810 96.80	0.500 12.70	19.88 505.0	16	1.250 31.75	22.75 577.9	48.7
20	20.00 508.0	27.50 698.5	20.25 514.4	1.690 42.90	4.060 103.1	0.500 12.70	22.00 558.8	20	1.250 31.75	25.00 635.0	61.6
24	24.00 609.6	32.00 812.8	24.25 616.0	1.880 47.80	4.380 111.3	0.500 12.70	26.12 663.4	20	1.380 35.10	29.50 749.3	86.6

Notes
- Weights are based on manufacturer's data and are approximate.
- For tolerances see page 8-4.

Lap Joint Flanges - ANSI B16.5

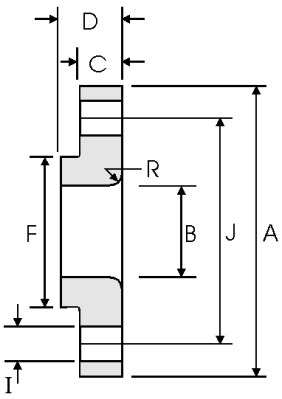

Class 300 lb

Pipe		Flange Data				Lap	Hub	Drilling Data			Weight
Nominal Pipe Size		A	B	C	D	R	F	H	I	J	
	Outside Diameter	Overall Diameter	Inside Diameter	Flange Thickness min	Overall Length	Lap Radius	Hub Diameter	Number of Holes	Bolt Hole Diameter	Diameter of Circle of Holes	kg/ piece
	in mm	in mm	in mm	in mm	in mm	in mm	in mm		in mm	in mm	
1/2	0.840 21.30	3.750 95.20	0.900 22.90	0.560 14.20	0.880 22.30	0.120 3.000	1.500 38.10	4	0.620 15.70	2.620 66.55	0.62
3/4	1.050 26.70	4.620 117.3	1.110 28.20	0.620 15.70	1.000 25.40	0.120 3.000	1.880 47.70	4	0.750 19.00	3.250 82.50	1.10
1	1.315 33.40	4.880 123.9	1.380 35.10	0.690 17.50	1.060 26.90	0.120 3.000	2.120 53.80	4	0.750 19.0	3.500 88.90	1.33
1 1/4	1.660 42.20	5.250 133.3	1.720 43.70	0.750 19.00	1.060 26.90	0.190 4.800	2.500 63.50	4	0.750 19.00	3.880 98.50	1.65
1 1/2	1.900 48.30	6.120 155.4	1.970 50.00	0.810 20.60	1.190 30.20	0.250 6.400	2.750 69.85	4	0.880 22.30	4.500 114.3	2.44
2	2.375 60.30	6.500 165.1	2.460 62.50	0.880 22.30	1.310 33.20	0.310 7.900	3.310 84.00	8	0.750 19.10	5.000 127.0	2.83
2 1/2	2.875 73.00	7.500 190.5	2.970 75.40	1.000 25.40	1.500 38.10	0.310 7.900	3.940 100.0	8	0.880 22.30	5.880 149.3	4.25
3	3.500 88.90	8.250 209.5	3.600 91.40	1.120 28.40	1.690 42.90	0.380 9.700	4.620 117.3	8	0.880 22.30	6.620 168.1	5.78
3 1/2	4.000 101.6	9.000 228.6	4.100 104.1	1.190 30.20	1.750 44.40	0.380 9.700	5.250 133.3	8	0.880 22.30	7.250 184.1	7.27
4	4.500 114.3	10.00 254.0	4.600 116.8	1.250 31.70	1.880 47.70	0.440 11.20	5.750 146.0	8	0.880 22.30	7.880 200.1	9.55
5	5.563 141.3	11.00 279.4	5.690 114.5	1.380 35.00	2.000 50.80	0.440 11.20	7.000 177.8	8	0.880 22.30	9.250 234.9	12.2
6	6.625 168.3	12.50 317.5	6.750 171.5	1.440 36.50	2.060 52.30	0.500 12.70	8.120 206.2	12	0.880 22.30	10.62 269.7	15.5
8	8.625 219.1	15.00 381.0	8.750 222.3	1.620 41.10	2.440 61.90	0.500 12.70	10.25 260.3	12	1.000 25.40	13.00 330.2	24.1
10	10.75 273.0	17.50 444.5	10.92 277.4	1.880 47.70	3.750 95.20	0.500 12.70	12.62 320.5	16	1.120 28.40	15.25 387.3	34.4
12	12.75 323.8	20.50 520.7	12.92 328.2	2.000 50.80	4.000 101.6	0.500 12.70	14.75 374.6	16	1.250 31.70	17.75 450.8	50.4
14	14.00 355.6	23.00 584.2	14.18 360.2	2.120 53.80	4.380 111.2	0.500 12.70	16.75 425.4	20	1.250 31.70	20.25 514.3	70.9
16	16.00 406.4	25.50 647.7	16.19 411.2	2.250 57.15	4.750 120.6	0.500 12.70	19.00 482.6	20	1.380 35.00	22.50 571.5	89.5
18	18.00 457.2	28.00 711.2	18.20 462.3	2.380 60.45	5.120 130.0	0.500 12.70	21.00 533.4	24	1.380 35.00	24.75 628.6	111
20	20.00 508.0	30.50 774.7	20.25 514.4	2.500 63.50	5.500 139.7	0.500 12.70	23.12 587.2	24	1.380 35.0	27.00 685.8	137
24	24.00 609.6	36.00 914.4	24.25 616.0	2.750 69.8	6.000 152.4	0.500 12.70	27.62 701.5	24	1.620 41.10	32.00 812.8	204

Notes
- Weights are based on manufacturer's data and are approximate.
- For tolerances see page 8-4.

Lap Joint Flanges - ANSI B16.5

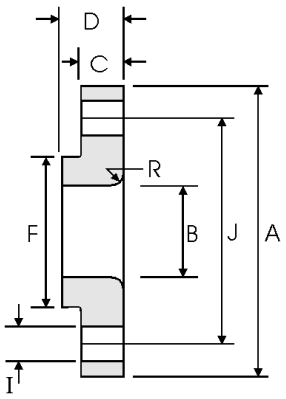

Class 400 lb

Pipe		Flange Data				Lap	Hub	Drilling Data			Weight
Nominal Pipe Size		A	B	C	D	R	F	H	I	J	
	Outside Diameter	Overall Diameter	Inside Diameter	Flange Thickness min	Overall Length	Lap Radius	Hub Diameter	Number of Holes	Bolt Hole Diameter		piece
	in mm	in mm	in mm	in mm	in mm	in mm	in mm		in mm	in mm	
1/2	0.840 21.30	3.750 95.30	0.900 22.90	0.560 14.20	0.880 22.40	0.120 3.000	1.500 38.10	4	0.620 15.70	2.620 66.55	0.72
3/4	1.050 26.70	4.620 117.3	1.110 28.20	0.620 15.70	1.000 25.40	0.120 3.000	1.880 47.80	4	0.750 19.10	3.250 82.60	1.25
1	1.315 33.40	4.880 124.0	1.380 35.10	0.690 17.50	1.060 26.90	0.120 3.000	2.120 53.80	4	0.750 19.10	3.500 88.90	1.50
1 1/4	1.660 42.20	5.250 133.4	1.720 43.70	0.810 20.60	1.120 28.40	0.190 4.800	2.500 63.50	4	0.750 19.10	3.880 98.60	2.00
1 1/2	1.900 48.30	6.120 155.4	1.970 50.00	0.880 22.40	1.250 31.75	0.250 6.400	2.750 69.85	4	0.880 22.40	4.500 114.3	2.92
2	2.375 60.30	6.500 165.1	2.460 62.50	1.000 25.40	1.440 36.60	0.310 7.900	3.310 84.10	8	0.750 19.10	5.000 127.0	3.55
2 1/2	2.875 73.00	7.500 190.5	2.970 75.40	1.120 28.40	1.620 41.10	0.310 7.900	3.940 100.1	8	0.880 22.40	5.880 149.4	5.23
3	3.500 88.90	8.250 209.6	3.600 91.40	1.125 31.75	1.810 46.00	0.380 9.700	4.620 117.3	8	0.880 22.40	6.620 168.1	6.95
3 1/2	4.000 101.6	9.000 228.6	4.100 104.1	1.380 35.10	1.940 49.30	0.380 9.700	5.250 133.4	8	1.000 25.40	7.250 184.2	8.78
4	4.500 114.3	10.00 254.0	4.600 116.8	1.380 35.10	2.000 50.80	0.440 11.20	5.750 146.1	8	1.000 25.40	7.880 200.2	10.9
5	5.563 141.3	11.00 279.4	5.690 114.5	1.500 38.10	2.120 53.80	0.440 11.20	7.000 177.8	8	1.000 25.40	9.250 235.0	13.7
6	6.625 168.3	12.50 317.5	6.750 171.5	1.620 41.10	2.250 57.15	0.500 12.70	8.120 206.2	12	1.000 25.40	10.62 269.7	18.0
8	8.625 219.1	15.00 381.0	8.750 222.3	1.880 47.80	2.690 68.30	0.500 12.70	10.25 260.4	12	1.120 28.40	13.00 330.2	28.3
10	10.75 273.0	17.50 444.5	10.92 277.4	2.120 53.80	4.000 101.6	0.500 12.70	12.62 320.5	16	1.250 31.75	15.25 387.4	38.8
12	12.75 323.8	20.50 520.7	12.92 328.2	2.250 57.15	4.250 108.0	0.500 12.70	14.75 374.7	16	1.380 35.10	17.75 450.9	56.6
14	14.00 355.6	23.00 584.2	14.18 360.2	2.380 60.45	4.620 117.3	0.500 12.70	16.75 425.5	20	1.380 35.10	20.25 514.4	78.6
16	16.00 406.4	25.50 647.7	16.19 411.2	2.500 63.50	5.000 127.0	0.500 12.70	19.00 482.6	20	1.500 38.10	22.50 571.5	100
18	18.00 457.2	28.00 711.2	18.20 462.3	2.620 66.55	5.380 136.7	0.500 12.70	21.00 533.4	24	1.500 38.10	24.75 628.7	122
20	20.00 508.0	30.50 774.7	20.25 514.4	2.750 69.85	5.750 146.1	0.500 12.70	23.12 587.2	24	1.620 41.10	27.00 685.8	145
24	24.00 609.6	36.00 914.4	24.25 616.0	3.000 76.20	6.250 158.8	0.500 12.70	27.62 701.5	24	1.880 47.80	32.00 812.8	217

Notes
- Weights are based on manufacturer's data and are approximate.
- For tolerances see page 8-4.

Lap Joint Flanges - ANSI B16.5

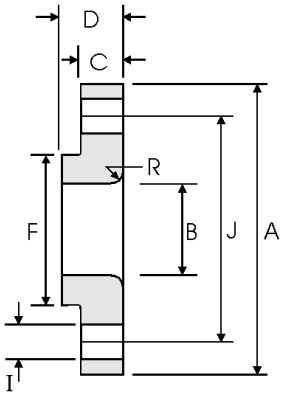

Class 600 lb

Pipe		Flange Data				Lap	Hub	Drilling Data			Weight
Nominal Pipe Size		A	B	C	D	R	F	H	I	J	
	Outside Diameter	Overall Diameter	Inside Diameter	Flange Thickness min	Overall Length	Lap Radius	Hub Diameter	Number of Holes	Bolt Hole Diameter	Diameter of Circle of Holes	kg/ piece
	in mm	in mm	in mm	in mm	in mm	in mm	in mm		in mm	in mm	
1/2	0.840 21.30	3.750 95.30	0.900 22.90	0.560 14.20	0.880 22.40	0.120 3.000	1.500 38.10	4	0.620 15.70	2.620 66.55	0.72
3/4	1.050 26.70	4.620 117.3	1.110 28.20	0.620 15.70	1.000 25.40	0.120 3.000	1.880 47.80	4	0.750 19.10	3.250 82.60	1.25
1	1.315 33.40	4.880 124.0	1.380 35.10	0.690 17.50	1.060 26.90	0.120 3.000	2.120 53.80	4	0.750 19.10	3.500 88.90	1.50
1 1/4	1.660 42.20	5.250 133.4	1.720 43.70	0.810 20.60	1.120 28.40	0.190 4.800	2.500 63.50	4	0.750 19.10	3.880 98.60	2.00
1 1/2	1.900 48.30	6.120 155.4	1.970 50.00	0.880 22.40	1.250 31.75	0.250 6.400	2.750 69.85	4	0.880 22.40	4.500 114.3	2.92
2	2.375 60.30	6.500 165.1	2.460 62.50	1.000 25.40	1.440 36.60	0.310 7.900	3.310 84.10	8	0.750 19.10	5.000 127.0	3.55
2 1/2	2.875 73.00	7.500 190.5	2.970 75.40	1.120 28.40	1.620 41.10	0.310 7.900	3.940 100.1	8	0.880 22.40	5.880 149.4	5.23
3	3.500 88.90	8.250 209.6	3.600 91.40	1.125 31.75	1.810 46.00	0.380 9.700	4.620 117.3	8	0.880 22.40	6.620 168.1	6.95
3 1/2	4.000 101.6	9.000 228.6	4.100 104.1	1.380 35.10	1.940 49.30	0.380 9.700	5.250 133.4	8	1.000 25.40	7.250 184.2	8.78
4	4.500 114.3	10.75 273.1	4.600 116.8	1.500 38.10	2.120 53.80	0.440 11.20	6.000 152.4	8	1.000 25.40	8.500 215.9	14.4
5	5.563 141.3	13.00 330.2	5.690 114.5	1.750 44.50	2.380 60.45	0.440 11.20	7.440 189.0	8	1.120 28.40	10.50 266.7	24.3
6	6.625 168.3	14.00 355.6	6.750 171.5	1.880 47.80	2.620 66.55	0.500 12.70	8.750 222.3	12	1.120 28.40	11.50 292.1	28.5
8	8.625 219.1	16.50 419.1	8.750 222.3	2.190 55.60	3.000 76.20	0.500 12.70	10.75 273.1	12	1.250 31.75	13.75 349.3	43.1
10	10.75 273.0	20.00 508.0	10.92 277.4	2.500 63.50	4.380 111.3	0.500 12.70	13.50 342.9	16	1.380 35.10	17.00 431.8	70.5
12	12.75 323.8	22.00 558.8	12.92 328.2	2.620 66.55	4.620 117.3	0.500 12.70	15.75 400.1	20	1.380 35.10	19.25 489.0	86.1
14	14.00 355.6	23.75 603.3	14.18 360.2	2.750 69.85	5.000 127.0	0.500 12.70	17.00 431.8	20	1.500 38.10	20.75 527.1	100
16	16.00 406.4	27.00 685.8	16.19 411.2	3.000 76.20	5.500 139.7	0.500 12.70	19.50 495.3	20	1.620 41.10	23.75 603.3	145
18	18.00 457.2	29.25 743.0	18.20 462.3	3.250 82.60	6.000 152.4	0.500 12.70	21.50 546.1	20	1.750 44.50	25.75 654.1	177
20	20.00 508.0	32.00 812.8	20.25 514.4	3.500 88.90	6.500 165.1	0.500 12.70	24.00 609.6	24	1.750 44.50	28.50 723.9	225
24	24.00 609.6	37.00 939.8	24.25 616.0	4.000 101.6	7.250 184.2	0.500 12.70	28.25 717.6	24	2.000 50.80	33.00 838.2	318

Notes
- Weights are based on manufacturer's data and are approximate.
- For tolerances see page 8-4.

Lap Joint Flanges - ANSI B16.5

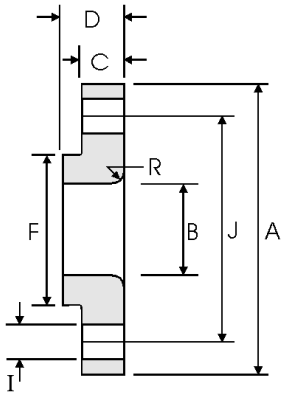

Class 900 lb

Pipe		Flange Data				Lap	Hub	Drilling Data			Weight
Nominal Pipe Size		A	B	C	D	R	F	H	I	J	
	Outside Diameter	Overall Diameter	Inside Diameter	Flange Thickness min	Overall Length	Lap Radius	Hub Diameter	Number of Holes	Bolt Hole Diameter	Diameter of Circle of Holes	kg/ piece
	in mm	in mm	in mm	in mm	in mm	in mm	in mm		in mm	in mm	
1/2	0.840 21.30	4.750 120.6	0.900 22.90	0.880 22.30	1.250 31.70	0.120 3.000	1.500 38.10	4	0.880 22.30	3.250 82.50	1.71
3/4	1.050 26.70	5.120 130.0	1.110 28.20	1.000 25.40	1.380 35.00	0.120 3.000	1.750 44.40	4	0.880 22.30	3.500 88.90	2.30
1	1.315 33.40	5.880 149.3	1.380 35.10	1.120 28.40	1.620 41.10	0.120 3.000	2.060 52.30	4	1.000 25.40	4.000 101.6	3.40
1 1/4	1.660 42.20	6.250 158.7	1.720 43.70	1.120 28.40	1.620 41.10	0.190 4.800	2.500 63.50	4	1.000 25.40	4.380 111.2	3.85
1 1/2	1.900 48.30	7.000 177.8	1.970 50.00	1.250 31.70	1.750 44.40	0.250 6.400	2.750 69.85	4	1.120 28.40	4.880 123.9	5.28
2	2.375 60.30	8.500 215.9	2.460 62.50	1.500 38.10	2.250 57.15	0.310 7.900	4.120 104.6	8	1.000 25.40	6.500 165.1	9.78
2 1/2	2.875 73.00	9.620 244.3	2.970 75.40	1.620 41.10	2.500 63.50	0.310 7.900	4.880 123.9	8	1.120 28.40	7.500 190.5	13.6
3	3.500 88.90	9.500 241.3	3.600 91.40	1.500 38.10	2.120 53.80	0.380 9.700	5.000 127.0	8	1.000 25.40	7.500 190.5	11.3
4	4.500 114.3	11.50 292.1	4.600 116.8	1.750 44.40	2.750 69.85	0.440 11.20	6.250 158.7	8	1.250 31.70	9.250 234.9	19.2
5	5.563 141.3	13.75 349.2	5.690 114.5	2.000 50.80	3.120 79.25	0.440 11.20	7.500 190.5	8	1.380 35.00	11.00 279.4	31.20
6	6.625 168.3	15.00 381.0	6.750 171.5	2.190 55.60	3.380 85.80	0.500 12.70	9.250 234.9	12	1.250 31.70	12.50 317.5	40.50
8	8.625 219.1	18.50 469.9	8.750 222.3	2.500 63.50	4.500 114.3	0.500 12.70	11.75 298.4	12	1.500 38.10	15.50 393.7	71.5
10	10.75 273.0	21.50 546.1	10.92 277.4	2.750 69.85	5.000 127.0	0.500 12.70	14.50 368.3	16	1.500 38.10	18.50 469.9	104
12	12.75 323.8	24.00 609.6	12.92 328.2	3.120 79.25	5.620 142.7	0.500 12.70	16.50 419.1	20	1.500 38.10	21.00 533.4	139
14	14.00 355.6	25.25 641.3	14.18 360.2	3.380 85.80	6.120 155.4	0.500 12.70	17.75 450.8	20	1.620 41.10	22.00 558.8	161
16	16.00 406.4	27.75 704.8	16.19 411.2	3.500 88.90	6.500 165.1	0.500 12.70	20.00 508.0	20	1.750 44.40	24.25 615.9	194
18	18.00 457.2	31.00 787.4	18.20 462.3	4.000 101.6	7.500 190.5	0.500 12.70	22.25 565.1	20	2.000 50.80	27.00 685.8	267
20	20.00 508.0	33.75 857.2	20.25 514.4	4.250 107.9	8.250 209.5	0.500 12.70	24.50 622.3	20	2.120 53.80	29.50 749.3	334
24	24.00 609.6	41.00 1041.4	24.25 616.0	50.50 139.7	10.50 266.7	0.500 12.70	29.50 749.3	20	2.620 66.55	35.50 901.7	618

Notes
- Weights are based on manufacturer's data and are approximate.
- For tolerances see page 8-4.

Lap Joint Flanges - ANSI B16.5

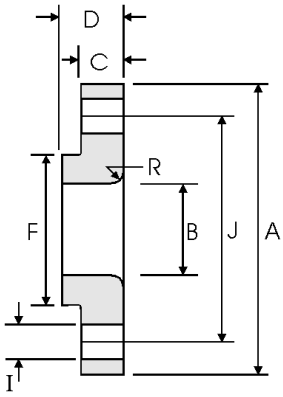

Class 1500 lb

Pipe		Flange Data				Lap	Hub	Drilling Data			Weight
Nominal Pipe Size		A	B	C	D	R	F	H	I	J	
	Outside Diameter	Overall Diameter	Inside Diameter	Flange Thickness min	Overall Length	Lap Radius	Hub Diameter	Number of Holes	Bolt Hole Diameter	Diameter of Circle of Holes	kg/ piece
	in mm	in mm	in mm	in mm	in mm	in mm	in mm		in mm	in mm	
1/2	0.840 21.30	4.750 120.6	0.900 22.90	0.880 22.30	1.250 31.70	0.120 3.000	1.500 38.10	4	0.880 22.30	3.250 82.50	1.71
3/4	1.050 26.70	5.120 130.0	1.110 28.20	1.000 25.40	1.380 35.00	0.120 3.000	1.750 44.40	4	0.880 22.30	3.500 88.90	2.30
1	1.315 33.40	5.880 149.3	1.380 35.10	1.120 28.40	1.620 41.10	0.120 3.000	2.060 52.30	4	1.000 25.40	4.000 101.6	3.40
1 1/4	1.660 42.20	6.250 158.7	1.720 43.70	1.120 28.40	1.620 41.10	0.190 4.800	2.500 63.50	4	1.000 25.40	4.380 111.2	3.85
1 1/2	1.900 48.30	7.000 177.8	1.970 50.00	1.250 31.70	1.750 44.40	0.250 6.400	2.750 69.85	4	1.120 28.40	4.880 123.9	5.28
2	2.375 60.30	8.500 215.9	2.460 62.50	1.500 38.10	2.250 57.15	0.310 7.900	4.120 104.6	8	1.000 25.40	6.500 165.1	9.78
2 1/2	2.875 73.00	9.620 244.3	2.970 75.40	1.620 41.10	2.500 63.50	0.310 7.900	4.880 123.9	8	1.120 28.40	7.500 190.5	13.6
3	3.500 88.90	10.50 266.7	3.600 91.40	1.880 47.70	2.880 73.15	0.380 9.700	5.250 133.3	8	1.250 31.70	8.000 203.2	17.8
4	4.500 114.3	12.25 311.1	4.600 116.8	2.120 53.80	3.560 90.40	0.440 11.20	6.380 162.0	8	1.380 35.00	9.500 241.3	27.5
5	5.563 141.3	14.75 374.6	5.690 114.5	2.880 73.15	4.120 104.6	0.440 11.20	7.750 196.8	8	1.620 41.10	11.50 292.1	51.5
6	6.625 168.3	15.50 399.7	6.750 171.5	3.250 82.50	4.690 119.1	0.500 12.70	9.000 228.6	12	1.500 38.10	12.50 317.5	62.0
8	8.625 219.1	19.00 482.6	8.750 222.3	3.620 91.90	5.620 142.7	0.500 12.70	11.50 292.1	12	1.750 44.40	15.50 393.7	105
10	10.75 273.0	23.00 584.2	10.92 277.4	4.250 107.9	7.000 177.8	0.500 12.70	14.50 368.3	12	2.000 50.80	19.00 482.6	179
12	12.75 323.8	26.50 673.1	12.92 328.2	4.880 123.9	8.620 218.9	0.500 12.70	17.75 450.8	16	2.120 53.80	22.50 571.5	269
14	14.00 355.6	29.50 749.3	14.18 360.2	5.250 133.3	9.500 241.3	0.500 12.70	19.50 495.3	16	2.380 60.45	25.00 635.0	365
16	16.00 406.4	32.50 825.5	16.19 411.2	5.750 146.0	10.25 260.3	0.500 12.70	21.75 552.4	16	2.620 66.55	27.75 704.8	459
18	18.00 457.2	36.00 914.4	18.20 462.3	6.380 162.0	10.88 276.3	0.500 12.70	23.50 596.9	16	2.880 73.15	30.50 774.7	598
20	20.00 508.0	38.75 984.2	20.25 514.4	7.000 177.8	11.50 292.1	0.500 12.70	25.25 641.3	16	3.120 79.25	32.75 831.8	712
24	24.00 609.6	46.00 1168.4	24.25 616.0	8.000 203.2	13.00 330.2	0.500 12.70	30.00 762.0	16	3.620 91.90	39.00 990.6	1090

Notes
- Weights are based on manufacturer's data and are approximate.
- For tolerances see page 8-4.

Lap Joint Flanges - ANSI B16.5

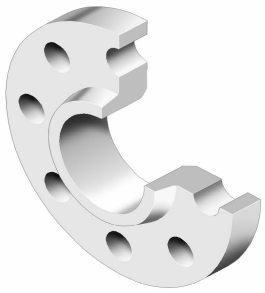

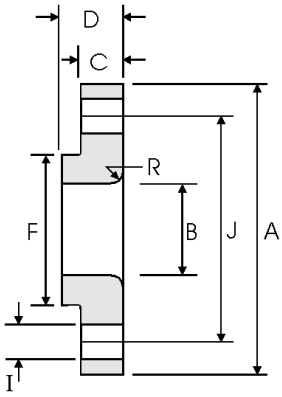

Class 2500 lb

Pipe		Flange Data				Lap	Hub	Drilling Data			Weight
Nominal Pipe Size		A	B	C	D	R	F	H	I	J	
	Outside Diameter	Overall Diameter	Inside Diameter	Flange Thickness min	Overall Length	Lap Radius	Hub Diameter	Number of Holes	Bolt Hole Diameter	Diameter of Circle of Holes	kg/ piece
	in mm	in mm	in mm	in mm	in mm	in mm	in mm		in mm	in mm	
1/2	0.840 21.30	5.255 133.4	0.900 22.90	1.190 30.20	1.560 39.60	0.120 3.000	1.690 42.90	4	0.880 22.40	3.500 88.90	2.92
3/4	1.050 26.70	5.500 139.7	1.110 28.20	1.250 31.75	1.690 42.90	0.120 3.000	2.000 50.80	4	0.880 22.40	3.750 95.30	3.40
1	1.315 33.40	6.250 158.8	1.380 35.10	1.380 35.10	1.880 47.80	0.120 3.000	2.250 57.15	4	1.000 25.40	4.250 108.0	4.77
1 1/4	1.660 42.20	7.250 184.2	1.720 43.70	1.500 38.10	2.060 52.30	0.190 4.800	2.880 73.15	4	1.120 28.40	5.120 130.0	7.08
1 1/2	1.900 48.30	8.000 203.2	1.970 50.00	1.750 44.50	2.380 60.45	0.250 6.400	3.120 79.25	4	1.250 31.75	5.750 146.1	9.93
2	2.375 60.30	9.250 235.0	2.460 62.50	2.000 50.80	2.750 69.85	0.310 7.900	3.750 95.30	8	1.120 28.40	6.750 171.5	14.7
2 1/2	2.875 73.00	10.50 266.7	2.970 75.40	2.250 57.15	3.120 79.25	0.310 7.900	4.500 114.3	8	1.250 31.75	7.750 196.9	21.3
3	3.500 88.90	12.00 304.8	3.600 91.40	2.620 66.55	3.620 91.90	0.380 9.700	5.250 133.4	8	1.380 35.10	9.000 228.6	32.3
4	4.500 114.3	14.00 355.6	4.600 116.8	3.000 76.20	4.250 108.0	0.440 11.20	6.500 165.1	8	1.620 41.10	10.75 273.1	52.5
5	5.563 141.3	16.50 419.1	5.690 114.5	3.620 91.90	5.120 130.0	0.440 11.20	8.000 203.2	8	1.880 47.80	12.75 323.9	82.6
6	6.625 168.3	19.00 482.6	6.750 171.5	4.250 108.0	6.000 152.4	0.500 12.70	9.250 235.0	8	2.120 53.80	14.50 368.3	127
8	8.625 219.1	21.75 552.5	8.750 222.3	5.000 127.0	7.000 177.8	0.500 12.70	12.00 304.8	12	2.120 53.80	17.25 438.2	186
10	10.75 273.0	26.50 673.1	10.92 277.4	6.500 165.1	9.000 228.6	0.500 12.70	14.75 374.7	12	2.620 66.55	21.25 539.8	352
12	12.75 323.8	30.00 762.0	12.92 328.2	7.250 184.2	10.00 254.0	0.500 12.70	17.38 441.5	12	2.880 73.15	24.38 619.3	501

Notes
- Weights are based on manufacturer's data and are approximate.
- For tolerances see page 8-4.

Threaded Flanges - ANSI B16.5

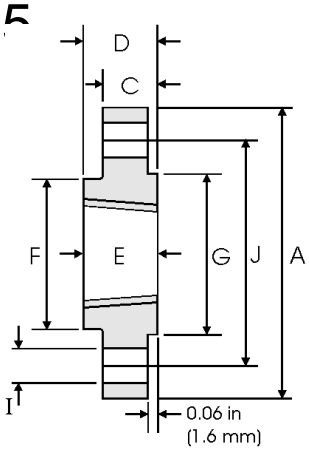

Class 150 lb

Pipe		Flange Data				Hub	Raised Face	Drilling Data			Weight
Nominal Pipe Size		A	C	D	E	F	G	H	I	J	
	Outside Diameter	Overall Diameter	Flange Thickness min	Overall Length	Threaded length min	Hub Diameter	Face Diameter	Number of Holes	Bolt Hole Diameter	Diameter of Circle of Holes	kg/ piece
	in mm	in mm	in mm	in mm	in mm	in mm	in mm		in mm	in mm	
1/2	0.840 21.30	3.500 88.90	0.440 11.20	0.620 15.70	0.620 15.70	1.190 30.20	1.380 35.10	4	0.620 15.70	2.380 60.45	0.39
3/4	1.050 26.70	3.880 98.60	0.500 12.70	0.620 15.70	0.620 15.70	1.500 38.10	1.690 42.90	4	0.620 15.70	2.750 69.85	0.56
1	1.315 33.40	4.250 108.0	0.560 14.20	0.690 17.50	0.690 17.50	1.940 49.30	2.000 50.80	4	0.620 15.70	3.120 79.25	0.78
1 1/4	1.660 42.20	4.620 117.3	0.620 15.70	0.810 20.60	0.810 20.60	2.310 58.70	2.500 63.50	4	0.620 15.70	3.500 88.90	1.03
1 1/2	1.900 48.30	5.000 127.0	0.690 17.50	0.880 22.40	0.880 22.30	2.560 65.00	2.880 73.15	4	0.620 15.70	3.880 98.60	1.32
2	2.375 60.30	6.000 152.4	0.750 19.10	1.000 25.40	1.000 25.40	3.060 77.70	3.620 91.90	4	0.750 19.10	4.750 120.7	2.06
2 1/2	2.875 73.00	7.000 177.8	0.880 22.40	1.120 28.40	1.120 28.40	3.560 90.40	4.120 104.6	4	0.750 19.10	5.500 139.7	3.28
3	3.500 88.90	7.500 190.5	0.940 23.90	1.190 30.20	1.190 30.20	4.250 108.0	5.000 127.0	4	0.750 19.10	6.000 152.4	3.85
3 1/2	4.000 101.6	8.500 215.9	0.940 23.90	1.250 31.75	1.250 31.75	4.810 122.2	5.500 139.7	8	0.750 19.10	7.000 177.8	4.81
4	4.500 114.3	9.000 228.6	0.940 23.90	1.310 33.30	1.310 33.30	5.310 134.9	6.190 157.2	8	0.750 19.10	7.500 190.5	5.30
5	5.563 141.3	10.00 254.0	0.940 23.90	1.440 36.60	1.440 36.60	6.440 163.6	7.310 185.7	8	0.880 22.40	8.500 215.9	6.07
6	6.625 168.3	11.00 279.4	1.000 25.40	1.560 39.60	1.560 39.60	7.560 192.0	8.500 215.9	8	0.880 22.40	9.500 241.3	7.45
8	8.625 219.1	13.50 342.9	1.120 28.40	1.750 44.50	1.750 44.50	9.690 246.1	10.62 269.7	8	0.880 22.40	11.75 298.5	12.1
10	10.75 273.0	16.00 406.4	1.190 30.20	1.940 49.30	1.940 49.30	12.00 304.8	12.75 323.9	12	1.000 25.40	14.25 362.0	16.5
12	12.75 323.8	19.00 482.6	1.250 31.75	2.190 55.60	2.190 55.60	14.38 365.3	15.00 381.0	12	1.000 25.40	17.00 431.8	26.2
14	14.00 355.6	21.00 533.4	1.380 35.10	2.250 57.15	2.250 57.15	15.75 400.1	16.25 412.7	12	1.120 28.40	18.75 476.3	34.6
16	16.00 406.4	23.50 596.9	1.440 36.60	2.500 63.50	2.500 63.50	18.00 457.2	18.50 469.9	16	1.120 28.40	21.25 539.8	44.8
18	18.00 457.2	25.00 635.0	1.560 39.60	2.690 68.30	2.690 68.30	19.88 505.0	21.00 533.4	16	1.250 31.75	22.75 577.9	48.9
20	20.00 508.0	27.50 698.5	1.690 42.90	2.880 73.15	2.880 73.15	22.00 558.8	23.00 584.2	20	1.250 31.75	25.00 635.0	61.9
24	24.00 609.6	32.00 812.8	1.880 47.80	3.250 82.60	3.250 82.60	26.12 663.4	27.25 692.2	20	1.380 35.10	29.50 749.3	86.9

Notes
- The thread conforms to ASME B1.20.1 NTP threads as described in Section 10. (The only exceptions are small male and female plain face threaded flanges which use NPSL recount threads.)
- Class 150 threaded flanges are made without a counterbore. Threads are chamfered to the major diameter (approx.) at an angle of 45° (approx.) at the back of the flange.
- Weights are based on manufacturer's data and are approximate.
- For tolerances see page 8-4.

Threaded Flanges - ANSI B16.5

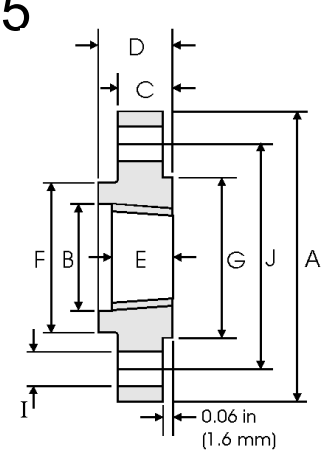

Class 300 lb

Pipe		Flange Data					Hub	Raised Face	Drilling Data			Weight
Nominal Pipe Size		A	B	C	D	E	F	G	H	I	J	
	Outside Diameter	Overall Diameter	Counter-bore min	Flange Thickness min	Overall Length	Threaded length min	Hub Diameter	Face Diameter	Number of Holes	Bolt Hole Diameter	Diameter of Circle of Holes	kg/ piece
	in mm	in mm	in mm	in mm	in mm	in mm	in mm	in mm		in mm	in mm	
1/2	0.840 21.30	3.750 95.20	0.930 23.60	0.560 14.20	0.880 22.30	0.620 15.70	1.500 38.10	1.380 35.00	4	0.620 15.70	2.620 66.55	0.64
3/4	1.050 26.70	4.620 117.3	1.140 29.00	0.620 15.70	1.000 25.40	0.620 15.70	1.880 47.70	1.690 42.90	4	0.750 19.00	3.250 82.50	1.12
1	1.315 33.40	4.880 123.9	1.410 35.80	0.690 17.50	1.060 26.90	0.690 17.50	2.120 53.80	2.000 50.80	4	0.750 19.00	3.500 88.90	1.36
1 1/4	1.660 42.20	5.250 133.3	1.750 44.40	0.750 19.00	1.060 26.90	0.810 20.60	2.500 63.50	2.500 63.50	4	0.750 19.00	3.880 98.50	1.68
1 1/2	1.900 48.30	6.120 155.4	1.980 50.50	0.810 20.60	1.190 30.20	0.880 22.30	2.750 69.85	2.880 73.15	4	0.880 22.30	4.500 114.3	2.49
2	2.375 60.30	6.500 165.1	2.500 63.50	0.880 22.30	1.310 33.20	1.120 28.40	3.310 84.00	3.620 91.90	8	0.750 19.00	5.000 127.0	2.87
2 1/2	2.875 73.00	7.500 190.5	3.000 76.20	1.000 25.40	1.500 38.10	1.250 31.70	3.940 100.0	4.120 104.6	8	0.880 22.30	5.880 149.3	4.32
3	3.500 88.90	8.250 209.5	3.630 92.20	1.120 28.40	1.690 42.90	1.250 31.70	4.620 117.3	5.000 127.0	8	0.880 22.30	6.620 168.1	5.85
3 1/2	4.000 101.6	9.000 228.6	4.130 104.9	1.190 30.20	1.750 44.40	1.440 36.50	5.250 133.3	5.500 139.7	8	0.880 22.30	7.250 184.1	7.34
4	4.500 114.3	10.00 254.0	4.630 117.6	1.250 31.70	1.880 47.70	1.440 36.50	5.750 146.0	6.190 157.2	8	0.880 22.30	7.880 200.1	9.61
5	5.563 141.3	11.00 279.4	5.690 144.5	1.380 35.00	2.000 50.80	1.690 42.90	7.000 177.8	7.310 185.7	8	0.880 22.30	9.250 234.9	12.3
6	6.625 168.3	12.50 317.5	6.750 171.4	1.440 36.50	2.060 52.30	1.810 45.90	8.120 206.2	8.500 215.9	12	0.880 22.30	10.62 269.7	15.6
8	8.625 219.1	15.00 381.0	8.750 222.2	1.620 41.10	2.440 61.90	2.000 50.80	10.25 260.3	10.62 269.7	12	1.000 25.40	13.00 330.2	24.2
10	10.75 273.0	17.50 444.5	10.88 276.3	1.880 47.70	2.620 66.55	2.190 55.60	12.62 320.5	12.75 323.9	16	1.120 28.40	15.25 387.3	34.1
12	12.75 323.8	20.50 520.7	12.94 328.7	2.000 50.80	2.880 73.15	2.380 60.45	14.75 374.6	15.00 381.0	16	1.250 31.70	17.75 450.8	49.8
14	14.00 355.6	23.00 584.2	14.19 360.4	2.120 53.80	3.000 76.20	2.500 63.50	16.75 425.4	16.25 412.7	20	1.250 31.70	20.25 514.3	69.9
16	16.00 406.4	25.50 647.7	16.19 411.2	2.250 57.15	3.250 82.50	2.690 68.30	19.00 482.6	18.50 469.9	20	1.380 35.00	22.50 571.5	88.1
18	18.00 457.2	28.00 711.2	18.19 462.0	2.380 60.45	3.500 88.90	2.750 69.85	21.00 533.4	21.00 533.4	24	1.380 35.00	24.75 628.6	109
20	20.00 508.0	30.50 774.7	20.19 512.8	2.500 63.50	3.750 95.2	2.880 73.15	23.12 587.2	23.00 584.2	24	1.380 35.00	27.00 685.8	134
24	24.00 609.6	36.00 914.4	24.19 614.4	2.750 69.85	4.190 106.4	3.250 82.50	27.62 701.5	27.25 692.2	24	1.620 41.10	32.00 812.8	201

Notes
- The thread conforms to ASME B1.20.1 NTP threads as described in Section 10. (The only exceptions are small male and female plain face threaded flanges which use NPSL locknut threads.)
- Class 300 and higher threaded flanges are counter-bored. Threads are chamfered to the counterbore at an angle of 45° (approx).
- Weights are based on manufacturer's data and are approximate.
- For tolerances see page 8-4.

Threaded Flanges - ANSI B16.5

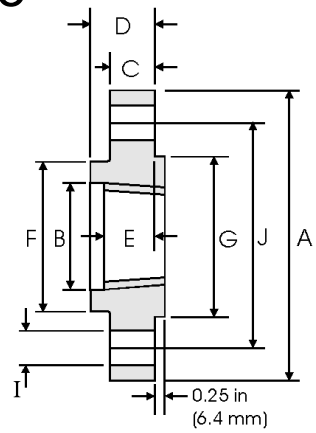

Class 400 lb

Pipe		Flange Data					Hub	Raised Face	Drilling Data			Weight
Nominal Pipe Size		A	B	C	D	E	F	G	H	I	J	
	Outside Diameter	Overall Diameter	Counter-bore min	Flange Thickness min	Overall Length	Threaded length min	Hub Diameter	Face Diameter	Number of Holes	Bolt Hole Diameter	Diameter of Circle of Holes	kg/ piece
	in mm	in mm	in mm	in mm	in mm	in mm	in mm	in mm		in mm	in mm	
1/2	0.840 21.30	3.750 95.30	0.930 23.60	0.560 14.20	0.880 22.40	0.620 15.70	1.500 38.10	1.380 35.10	4	0.620 15.70	2.620 66.55	0.74
3/4	1.050 26.70	4.620 117.3	1.140 29.00	0.620 15.70	1.000 25.40	0.620 15.70	1.880 47.80	1.690 42.90	4	0.750 19.10	3.250 82.60	1.27
1	1.315 33.40	4.880 124.0	1.410 35.80	0.690 17.50	1.060 26.90	0.690 17.50	2.120 53.80	2.000 50.80	4	0.750 19.10	3.500 88.90	1.52
1 1/4	1.660 42.20	5.250 133.4	1.750 44.50	0.810 20.60	1.120 28.40	0.810 20.60	2.500 63.50	2.500 63.50	4	0.750 19.10	3.880 98.60	2.03
1 1/2	1.900 48.30	6.120 155.4	1.990 50.50	0.880 22.40	1.250 31.75	0.880 22.40	2.750 69.85	2.880 73.15	4	0.880 22.40	4.500 114.3	2.96
2	2.375 60.30	6.500 165.1	2.500 63.50	1.000 25.40	1.440 36.60	1.120 28.40	3.310 84.10	3.620 91.90	8	0.750 19.10	5.000 127.0	3.62
2 1/2	2.875 73.00	7.500 190.5	3.000 76.20	1.120 28.40	1.620 41.10	1.250 31.75	3.940 100.1	4.120 104.6	8	0.880 22.40	5.880 149.4	5.28
3	3.500 88.90	8.250 209.6	3.630 92.20	1.250 31.75	1.810 46.00	1.380 35.10	4.620 117.3	5.000 127.0	8	0.880 22.40	6.620 168.1	7.00
3 1/2	4.000 101.6	9.000 228.6	413.0 104.9	1.380 35.10	1.940 49.30	1.560 39.60	5.250 133.4	5.500 139.7	8	1.000 25.40	7.250 184.2	8.84
4	4.500 114.3	10.00 254.0	4.630 117.6	1.380 35.10	2.000 50.80	1.440 36.60	5.750 146.1	6.190 157.2	8	1.000 25.40	7.880 200.2	11.1
5	5.563 141.3	11.00 279.4	5.690 144.5	1.500 38.10	2.120 53.80	1.690 42.90	7.000 177.8	7.310 185.7	8	1.000 25.40	9.250 235.0	13.9
6	6.625 168.3	12.50 317.5	6.750 171.5	1.620 41.10	2.250 57.15	1.810 46.00	8.120 206.2	8.500 215.9	12	1.000 25.40	10.62 269.7	18.3
8	8.625 219.1	15.00 381.0	8.750 222.3	1.880 47.80	2.690 68.30	2.000 50.80	10.25 260.4	10.62 269.7	12	1.120 28.40	13.00 330.2	28.6
10	10.75 273.0	17.50 444.5	10.88 276.4	2.120 53.80	2.880 73.15	2.190 55.60	12.62 320.5	12.75 323.9	16	1.250 31.75	15.25 387.4	39.2
12	12.75 323.8	20.50 520.7	12.94 328.7	2.250 57.15	3.120 79.25	2.380 60.45	14.75 374.7	15.00 381.0	16	1.380 35.10	17.75 450.9	57.0
14	14.00 355.6	23.00 584.2	14.19 360.4	2.380 60.45	3.310 84.10	2.500 63.50	16.75 425.5	16.25 412.8	20	1.380 35.10	20.25 514.4	79.1
16	16.00 406.4	25.50 647.7	16.19 411.2	2.500 63.50	3.690 93.70	2.690 68.30	19.00 482.6	18.50 469.9	20	1.500 38.10	22.50 571.5	101
18	18.00 457.2	28.00 711.2	18.19 462.0	2.620 66.55	3.880 98.60	2.750 69.85	21.00 533.4	21.00 533.4	24	1.500 38.10	24.75 628.7	123
20	20.00 508.0	30.50 774.7	20.19 512.8	2.750 69.85	4.000 101.6	2.880 73.15	23.12 587.2	23.00 584.2	24	1.620 41.10	27.00 685.8	146
24	24.00 609.6	36.00 914.4	24.19 614.4	3.000 76.20	4.500 114.3	3.250 82.60	27.62 701.5	27.25 692.2	24	1.880 47.80	32.00 812.8	219

Notes
- The thread conforms to ASME B1.20.1 NTP threads as described in Section 10. (The only exceptions are small male and female plain face threaded flanges which use NPSL locknut threads.)
- Class 300 and higher threaded flanges are counter-bored. Threads are chamfered to the counterbore at an angle of 45° (approx).
- Weights are based on manufacturer's data and are approximate.
- For tolerances see page 8-4.

Threaded Flanges - ANSI B16.5

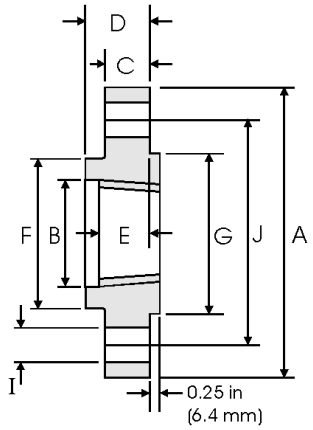

Class 600 lb

Pipe		Flange Data					Hub	Raised Face	Drilling Data			Weight
Nominal Pipe Size		A	B	C	D	E	F	G	H	I	J	
	Outside Diameter	Overall Diameter	Counter-bore min	Flange Thickness min	Overall Length	Threaded length min	Hub Diameter	Face Diameter	Number of Holes	Bolt Hole Diameter	Diameter of Circle of Holes	kg/ piece
	in mm	in mm	in mm	in mm	in mm	in mm	in mm	in mm		in mm	in mm	
1/2	0.840 21.30	3.750 95.20	0.930 23.60	0.560 14.20	0.880 22.40	0.620 15.70	1.500 38.10	1.380 35.10	4	0.620 15.70	2.620 66.55	0.74
3/4	1.050 26.70	4.620 117.3	1.140 29.00	0.620 15.70	1.000 25.40	0.620 15.70	1.880 47.80	1.690 42.90	4	0.750 19.10	3.250 82.60	1.27
1	1.315 33.40	4.880 124.0	1.410 35.80	0.690 17.50	1.060 26.90	0.690 17.50	2.120 53.80	2.000 50.80	4	0.750 19.10	3.500 88.90	1.52
1 1/4	1.660 42.20	5.250 133.4	1.750 44.50	0.810 20.60	1.120 28.40	0.810 20.60	2.500 63.50	2.500 63.50	4	0.750 19.10	3.880 98.60	2.03
1 1/2	1.900 48.30	6.120 155.4	1.990 50.50	0.880 22.40	1.250 31.75	0.880 22.40	2.750 69.85	2.880 73.15	4	0.880 22.40	4.500 114.3	2.96
2	2.375 60.30	6.500 165.1	2.500 63.50	1.000 25.40	1.440 36.60	1.120 28.40	3.310 84.10	3.620 91.90	8	0.750 19.10	5.000 127.0	3.62
2 1/2	2.875 73.00	7.500 190.5	3.000 76.20	1.120 28.40	1.620 41.10	1.250 31.75	3.940 100.1	4.120 104.6	8	0.880 22.40	5.880 149.4	5.28
3	3.500 88.90	8.250 209.6	3.630 92.20	1.250 31.75	1.810 46.00	1.380 35.10	4.620 117.3	5.000 127.0	8	0.880 22.40	6.620 168.1	7.00
3 1/2	4.000 101.6	9.000 228.6	4.130 104.9	1.380 35.10	1.940 49.30	1.560 39.60	5.250 133.4	5.500 139.7	8	1.000 25.40	7.250 184.2	8.84
4	4.500 114.3	10.75 273.1	4.630 117.6	1.500 38.10	2.120 53.80	1.620 41.10	6.000 152.4	6.190 157.2	8	1.000 25.40	8.500 215.9	14.5
5	5.563 141.3	13.00 330.2	5.690 144.5	1.750 44.50	2.380 60.45	1.880 47.80	7.440 189.0	7.310 185.7	8	1.120 28.40	10.50 266.7	24.4
6	6.625 168.3	14.00 355.6	6.750 171.5	1.880 47.80	2.620 66.55	2.000 50.80	8.750 222.3	8.500 215.9	12	1.120 28.40	11.50 292.1	28.7
8	8.625 219.1	16.50 419.1	8.750 222.3	2.190 55.60	3.000 76.20	2.250 57.15	10.75 273.1	10.62 269.7	12	1.250 31.75	13.75 349.3	43.4
10	10.75 273.0	20.00 508.0	10.88 276.4	2.500 63.50	3.380 85.90	2.560 65.00	13.50 342.9	12.75 323.9	16	1.380 35.10	17.00 431.8	70.3
12	12.75 323.8	22.00 558.8	12.94 328.7	2.620 66.55	3.620 91.90	2.750 69.85	15.75 400.1	15.00 381.0	20	1.380 35.10	19.25 489.0	84.2
14	14.00 355.6	23.75 603.3	14.19 360.4	2.750 69.85	3.690 93.70	2.880 73.15	17.00 431.8	16.25 412.8	20	1.500 38.10	20.75 527.1	98.7
16	16.00 406.4	27.00 685.8	16.19 411.2	3.000 76.20	4.190 106.4	3.060 77.70	19.50 495.3	18.50 469.9	20	1.620 41.10	23.75 603.3	142
18	18.00 457.2	29.25 743.0	18.19 462.0	3.250 82.60	4.620 117.3	3.120 79.25	21.50 546.1	21.00 533.4	20	1.750 44.50	25.75 654.1	173
20	20.00 508.0	32.00 812.8	20.19 512.8	3.500 88.90	5.000 127.0	3.250 82.60	24.00 609.6	23.00 584.2	24	1.750 44.50	28.50 723.9	220
24	24.00 609.6	37.00 939.8	24.19 614.4	4.000 101.6	5.500 139.7	3.620 91.90	28.25 717.6	27.25 692.2	24	2.000 50.80	33.00 838.2	312

Notes
- The thread conforms to ASME B1.20.1 NTP threads as described in Section 10. (The only exceptions are small male and female plain face threaded flanges which use NPSL locknut threads.)
- Class 300 and higher threaded flanges are counter-bored. Threads are chamfered to the counterbore at an angle of 45° (approx).
- Weights are based on manufacturer's data and are approximate.
- For tolerances see page 8-4.

Threaded Flanges - ANSI B16.5

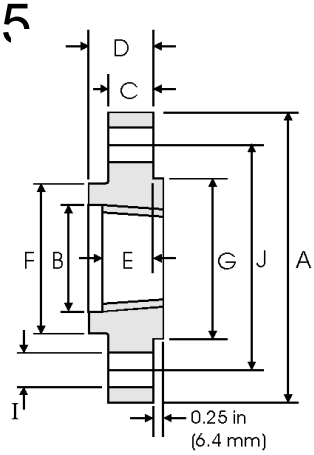

Class 900 lb

Pipe		Flange Data					Hub	Raised Face	Drilling Data			Weight
Nominal Pipe Size		A	B	C	D	E	F	G	H	I	J	
	Outside Diameter	Diameter Overall	Counter-bore min	Flange Thickness min	Overall Length	Threaded length min	Hub Diameter	Face Diameter	Number of Holes	Bolt Hole Diameter	Diameter of Circle of Holes	kg/ piece
	in mm	in mm	in mm	in mm	in mm	in mm	in mm	in mm		in mm	in mm	
1/2	0.840 21.30	4.750 120.6	0.930 23.60	0.880 22.30	1.250 31.70	0.880 22.30	1.500 38.10	1.380 35.10	4	0.880 22.30	3.250 82.50	1.74
3/4	1.050 26.70	5.120 130.0	1.140 29.00	1.000 25.40	1.380 35.00	1.000 25.40	1.750 44.40	1.690 42.90	4	0.880 22.30	3.500 88.90	2.34
1	1.315 33.40	5.880 149.3	1.410 35.80	1.120 28.40	1.620 41.10	1.120 28.40	2.060 52.30	2.000 50.80	4	1.000 25.40	4.000 101.6	3.44
1 1/4	1.660 42.20	6.250 158.7	1.750 44.40	1.120 28.40	1.620 41.10	1.190 30.20	2.500 63.50	2.500 63.50	4	1.000 25.40	4.380 111.2	3.91
1 1/2	1.900 48.30	7.000 177.8	1.990 50.50	1.250 31.70	1.750 44.50	1.250 31.70	2.750 69.85	2.880 73.15	4	1.120 28.40	4.880 123.9	5.36
2	2.375 60.30	8.500 215.9	2.500 63.50	1.500 38.10	2.250 57.15	1.500 38.10	4.120 104.6	3.620 91.90	8	1.000 25.40	6.500 165.1	9.85
2 1/2	2.875 73.00	9.620 244.3	3.000 76.20	1.620 41.10	2.500 63.50	1.880 47.70	4.880 123.9	4.120 104.6	8	1.120 28.40	7.500 190.5	13.7
3	3.500 88.90	9.500 241.3	3.630 92.20	1.500 38.10	2.120 53.80	1.620 41.10	5.000 127.0	5.000 127.0	8	1.000 25.40	7.500 190.5	11.6
4	4.500 114.3	11.50 292.1	4.630 117.6	1.750 44.40	2.750 69.85	1.880 47.80	6.250 158.7	6.190 157.2	8	1.250 31.70	9.250 234.9	19.7
5	5.563 141.3	13.75 349.2	5.690 144.5	2.000 50.80	3.120 79.25	2.120 53.80	7.500 190.5	7.310 185.7	8	1.380 35.00	11.00 279.4	31.9
6	6.625 168.3	15.00 381.0	6.750 171.4	2.190 55.60	3.380 85.80	2.250 57.15	9.250 234.9	8.500 215.9	12	1.250 31.70	12.50 317.5	41.1
8	8.625 219.1	18.50 469.9	8.750 222.2	2.500 63.50	4.000 101.6	2.500 63.50	11.75 298.4	10.62 269.7	12	1.500 38.10	15.50 393.7	70.7
10	10.75 273.0	21.50 546.1	10.88 276.3	2.750 69.85	4.250 107.9	2.810 71.40	14.50 368.3	12.75 323.9	16	1.500 38.10	18.50 469.9	101
12	12.75 323.8	24.00 609.6	12.94 328.7	3.120 79.40	4.620 117.3	3.000 76.20	16.50 419.1	15.00 381.0	20	1.500 38.10	21.00 533.4	133
14	14.00 355.6	25.25 641.3	14.19 360.4	3.380 85.70	5.120 130.0	3.250 82.50	17.75 450.8	16.25 412.7	20	1.620 41.10	22.00 558.8	153
16	16.00 406.4	27.75 704.8	16.19 411.2	3.500 88.90	5.250 133.3	3.380 85.90	20.00 508.0	18.50 469.9	20	1.750 44.40	24.25 618.9	185
18	18.00 457.2	31.00 787.4	18.19 462.0	4.000 101.6	6.000 152.4	3.500 88.90	22.25 565.1	21.00 533.4	20	2.000 50.80	27.00 685.8	258
20	20.00 508.0	33.75 857.2	20.19 512.8	4.250 107.9	6.250 158.7	3.620 91.90	24.50 622.3	23.00 584.2	20	2.120 53.80	29.50 749.3	317
24	24.00 609.6	41.00 1041.4	24.19 614.4	5.500 139.7	8.000 203.2	4.000 101.6	29.50 749.3	27.25 692.2	20	2.620 66.55	35.50 901.7	606

Notes
- The thread conforms to ASME B1.20.1 NTP threads as described in Section 10. (The only exceptions are small male and female plain face threaded flanges which use NPSL locknut threads.)
- Class 300 and higher threaded flanges are counter-bored. Threads are chamfered to the counterbore at an angle of 45° (approx).
- Weights are based on manufacturer's data and are approximate.
- For tolerances see page 8-4.

Threaded Flanges - ANSI B16.5

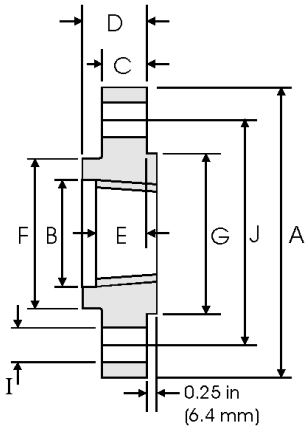

Class 1500 lb

Pipe		Flange Data					Hub	Raised Face	Drilling Data			Weight
Nominal Pipe Size		A	B	C	D	E	F	G	H	I	J	
	Outside Diameter	Overall Diameter	Counter-bore min	Flange Thickness min	Overall Length	Threaded length min	Hub Diameter	Face Diameter	Number of Holes	Bolt Hole Diameter	Diameter of Circle of Holes	kg/ piece
	in mm	in mm	in mm	in mm	in mm	in mm	in mm	in mm		in mm	in mm	
1/2	0.840 21.30	4.750 120.6	0.930 23.60	0.880 22.30	1.250 31.70	0.880 22.30	1.500 38.10	1.380 35.00	4	0.880 22.30	3.250 82.50	1.74
3/4	1.050 26.70	5.120 130.0	1.140 29.00	1.000 25.40	1.380 35.00	1.000 25.40	1.750 44.40	1.690 42.90	4	0.880 22.30	3.500 88.90	2.34
1	1.315 33.40	5.880 149.3	1.410 35.80	1.120 28.40	1.620 41.10	1.120 28.40	2.060 52.30	2.000 50.80	4	1.000 25.40	4.000 101.6	3.44
1 1/4	1.660 42.20	6.250 158.7	1.750 44.40	1.120 28.40	1.620 41.10	1.190 30.20	2.500 63.50	2.500 63.50	4	1.000 25.40	4.380 111.2	3.91
1 1/2	1.900 48.30	7.000 177.8	1.990 50.50	1.250 31.70	1.750 44.50	1.250 31.70	2.750 69.85	2.880 73.15	4	1.120 28.40	4.880 123.9	5.36
2	2.375 60.30	8.500 215.9	2.500 63.50	1.500 38.10	2.250 57.15	1.500 38.10	4.120 104.6	3.620 91.90	8	1.000 25.40	6.500 165.1	9.85
2 1/2	2.875 73.00	9.620 244.3	3.000 76.20	1.620 41.10	2.500 63.50	1.880 47.70	4.880 123.9	4.120 104.6	8	1.120 28.40	7.500 190.5	13.7

Notes
- The thread conforms to ASME B1.20.1 NTP threads as described in Section 10. (The only exceptions are small male and female plain face threaded flanges which use NPSL locknut threads.)
- Class 300 and higher threaded flanges are counter-bored. Threads are chamfered to the counterbore at an angle of 45° (approx).
- Weights are based on manufacturer's data and are approximate.
- For tolerances see page 8-4.

Threaded Flanges - ANSI B16.5

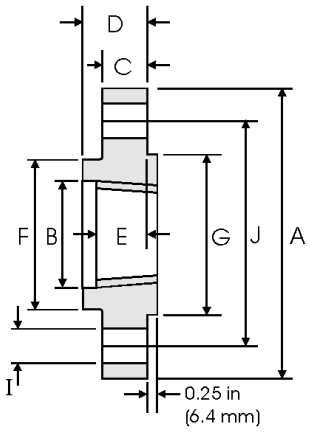

Class 2500 lb

Pipe		Flange Data					Hub	Raised Face	Drilling Data			Weight
Nominal Pipe Size		A	B	C	D	E	F	G	H	I	J	
	Outside Diameter	Overall Diameter	Counter-bore min	Flange Thickness min	Overall Length	Threaded length min	Hub Diameter	Face Diameter	Number of Holes	Bolt Hole Diameter	Diameter of Circle of Holes	kg/ piece
	in mm	in mm	in mm	in mm	in mm	in mm	in mm	in mm		in mm	in mm	
1/2	0.840 21.30	5.250 133.4	0.930 23.60	1.190 30.20	1.560 39.60	1.120 28.40	1.690 42.90	1.380 35.10	4	0.880 22.40	3.500 88.90	2.95
3/4	1.050 26.70	5.500 139.7	1.140 29.00	1.250 31.75	1.690 42.90	1.250 31.75	2.000 50.80	1.690 42.90	4	0.880 22.40	3.750 95.30	3.44
1	1.315 33.40	6.250 158.8	1.410 35.80	1.380 35.10	1.880 47.80	1.380 35.10	2.250 57.15	2.000 50.80	4	1.000 25.40	4.250 108.0	4.82
1 1/4	1.660 42.20	7.250 1.842	1.750 44.50	1.500 38.10	2.060 52.30	1.500 38.10	2.880 73.15	2.500 63.50	4	1.120 28.40	5.120 130.0	7.14
1 1/2	1.900 48.30	8.000 203.2	1.990 50.50	1.750 44.50	2.380 60.45	1.750 44.50	3.120 79.25	2.880 73.15	4	1.250 31.75	5.750 146.1	10.0
2	2.375 60.30	9.250 235.0	2.500 63.50	2.000 50.80	2.750 69.85	2.000 50.80	3.750 95.30	3.620 91.90	8	1.120 28.40	6.750 171.5	14.8
2 1/2	2.875 73.00	10.50 266.7	3.000 76.20	2.250 57.15	3.120 79.25	2.250 57.15	4.500 114.3	4.120 104.6	8	1.250 31.75	7.750 196.9	21.5

Notes
- The thread conforms to ASME B1.20.1 NTP threads as described in Section 10. (The only exceptions are small male and female plain face threaded flanges which use NPSL locknut threads.)
- Class 300 and higher threaded flanges are counter-bored. Threads are chamfered to the counterbore at an angle of 45° (approx).
- Weights are based on manufacturer's data and are approximate.
- For tolerances see page 8-4.

ASME B16.47 Series A (MSS SP-44) Flanges

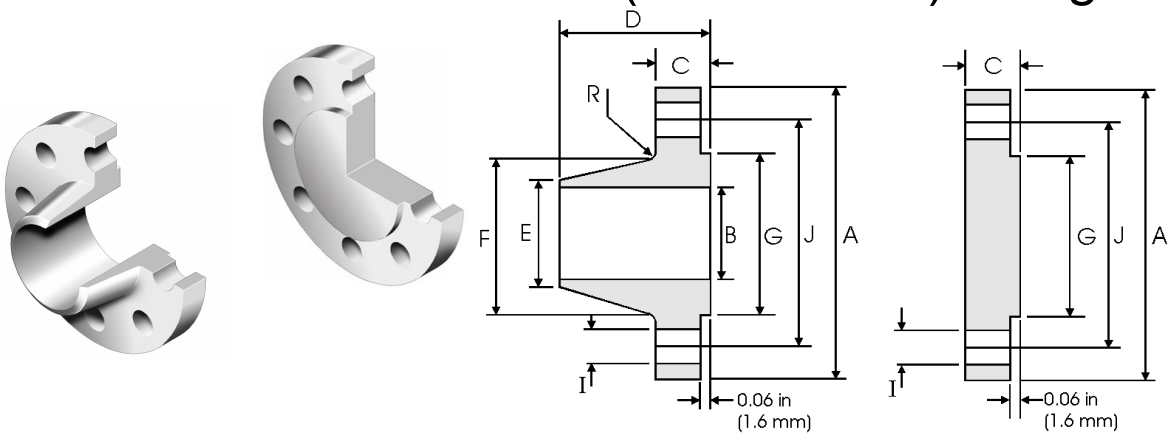

Class 150 lb

Pipe	Flange Data				Hub Data		Raised Face	Drilling Data			Radius
Nominal Pipe Size	A	B	C	D	E	F	G	H	I	J	R
	Overall Diameter	WNF Flange Thickness min	Blind Flange Thickness min	Overall Length WNF	Diameter at Weld Bevel	Hub Diameter	Face Diameter	Number of Holes	Bolt Hole Diameter	Diameter of Circle of Holes	Fillet
	in mm	in mm	in mm	in mm	in mm	in mm	in mm		in mm	in mm	in mm
22	29.50 749.30	1.81 45.97	1.81 45.97	5.88 149.35	22.00 558.80	24.00 609.60	25.25 641.35	20	1.38 35.05	27.25 692.15	0.38 9.65
26	34.25 869.95	2.69 68.33	2.69 68.33	4.75 120.65	26.00 660.40	26.62 676.15	29.50 749.30	24	1.38 35.05	31.75 806.45	0.38 9.65
28	36.50 927.10	2.81 71.37	2.81 71.37	4.94 125.48	28.00 711.20	28.62 726.95	31.50 800.10	28	1.38 35.05	34.00 863.60	0.44 11.18
30	38.75 984.25	2.94 74.68	2.94 74.68	5.38 136.65	30.00 762.00	30.75 781.05	33.75 857.25	28	1.38 35.05	36.00 914.40	0.44 11.18
32	41.75 1060.5	3.19 81.03	3.19 81.03	5.69 144.53	32.00 812.80	32.75 831.85	36.00 914.40	28	1.62 41.15	38.50 977.90	0.44 11.18
34	43.75 1111.3	3.25 82.55	3.25 82.55	5.88 149.35	34.00 863.60	34.75 882.65	38.00 965.20	32	1.62 41.15	40.50 1028.7	0.50 12.70
36	46.00 1168.4	3.56 90.42	3.56 90.42	6.19 157.23	36.00 914.40	36.75 933.45	40.25 1022.4	32	1.62 41.15	42.75 1085.9	0.50 12.70
38	48.75 1238.3	3.44 87.38	3.44 87.38	6.19 157.23	38.00 965.20	39.00 990.60	42.25 1073.2	32	1.62 41.15	45.25 1149.4	0.50 12.70
40	50.75 1289.1	3.56 90.42	3.56 90.42	6.44 163.58	40.00 1016.0	41.00 1041.4	44.25 1124.0	36	1.62 41.15	47.25 1200.2	0.50 12.70
42	53.00 1346.2	3.81 96.77	3.81 96.77	6.75 171.45	42.00 1066.8	43.00 1092.2	47.00 1193.8	36	1.62 41.15	49.50 1257.3	0.50 12.70
44	55.25 1403.4	4.00 101.60	4.00 101.60	7.00 177.80	44.00 1117.6	45.00 1143.0	49.00 1244.6	40	1.62 41.15	51.75 1314.5	0.50 12.70
46	57.25 1454.2	4.06 103.12	4.06 103.12	7.31 185.67	46.00 1168.4	47.12 1196.9	51.00 1295.4	40	1.62 41.15	53.75 1365.3	0.50 12.70
48	59.50 1511.3	4.25 107.95	4.25 107.95	7.56 192.02	48.00 1219.2	49.12 1247.7	53.50 1358.9	44	1.62 41.15	56.00 1422.4	0.50 12.70

Notes
- ASME B16.47 Series A flanges (≥ NPS 26) are MMS SP-44 flanges. MSS SP-44 also covers NPS 12 to NPS 24 flanges which are equivalent to ASME B16.5. MSS SP-44 is the only source for the NPS 22 flange dimensions above.
- Dimension B is to be specified by the purchaser. It corresponds to the pipe inside diameter.
- Flat face flanges may be provided at full thickness, C, or with raised face removed (the latter is nonstandard).
- WNF = Weld Neck Flange.
- The large end of the hub may be straight or tapered.
- For ring joint facings see page 8-6. For weld end bevel see page 8-5.
- For tolerances see page 8-4.

ASME B16.47 Series A (MSS SP-44) Flanges

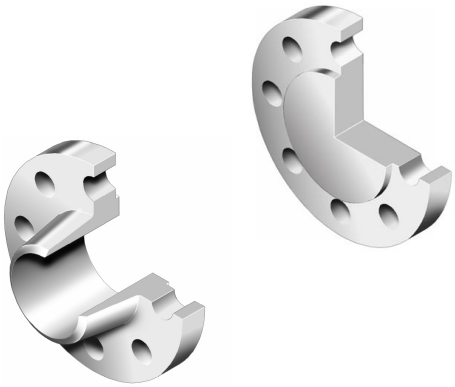

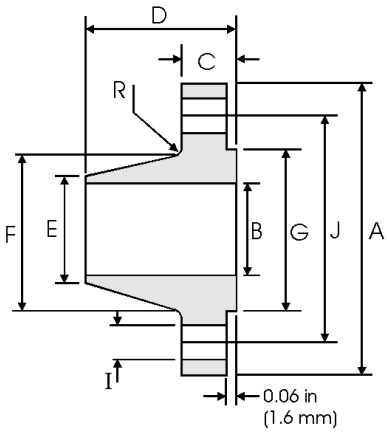

Weld Neck

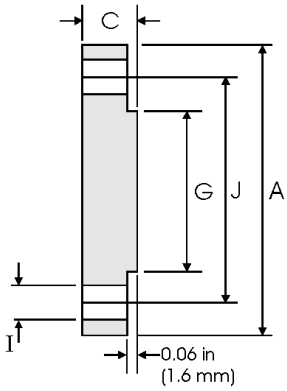

Blind

Class 300 lb

Pipe	Flange Data				Hub Data		Raised Face	Drilling Data			Radius
Nominal Pipe Size	A	B	C	D	E	F	G	H	I	J	R
	Overall Diameter	WNF Flange Thickness min	Blind Flange Thickness min	Overall Length WNF	Diameter at Weld Bevel	Hub Diameter	Face Diameter	Number of Holes	Bolt Hole Diameter	Diameter of Circle of Holes	Fillet
	in mm	in mm	in mm	in mm	in mm	in mm	in mm		in mm	in mm	in mm
22	33.00 838.20	2.62 66.55	2.62 66.55	6.50 165.10	22.00 558.80	25.25 641.35	25.25 641.35	24	1.62 41.15	29.25 742.95	0.38 9.65
26	38.25 971.55	3.12 79.25	3.31 84.07	7.25 184.15	26.00 660.40	28.38 720.85	29.50 749.30	28	1.75 44.45	34.50 876.30	0.38 9.65
28	40.75 1035.1	3.38 85.85	3.56 90.42	7.75 196.85	28.00 711.20	30.50 774.70	31.50 800.10	28	1.75 44.45	37.00 939.80	0.44 11.18
30	43.00 1092.2	3.62 91.95	3.75 95.25	8.25 209.55	30.00 762.00	32.56 827.02	33.75 857.25	28	1.88 47.75	39.25 996.95	0.44 11.18
32	45.25 1149.4	3.88 98.55	3.94 100.08	8.75 222.25	32.00 812.80	34.69 881.13	36.00 914.40	28	2.00 50.80	41.50 1054.1	0.44 11.18
34	47.50 120.50	4.00 101.60	4.12 104.65	9.12 231.65	34.00 863.60	36.88 936.75	38.00 965.20	28	2.00 50.80	43.50 1104.9	0.50 12.70
36	50.00 1270.0	4.12 104.65	4.38 111.25	9.50 241.30	36.00 914.40	39.00 990.60	40.25 1022.4	32	2.12 53.85	46.00 1168.4	0.50 12.70
38	46.00 1168.4	4.25 107.95	4.25 107.95	7.12 180.85	38.00 965.20	39.12 993.65	40.50 1028.7	32	1.62 41.15	43.00 1092.2	0.50 12.70
40	48.75 1238.3	4.50 114.30	4.50 114.30	7.62 193.55	40.00 1016.0	41.25 1047.8	42.75 1085.9	32	1.75 44.45	45.50 1155.7	0.50 12.70
42	50.75 1289.1	4.69 119.13	4.69 119.13	7.88 200.15	42.00 1066.8	43.25 1098.6	44.75 1136.7	32	1.75 44.45	47.50 1206.6	0.50 12.70
44	53.25 1352.6	4.88 123.95	4.88 123.95	8.12 206.25	44.00 1117.6	45.25 1149.4	47.00 1193.8	32	1.88 47.75	49.75 1263.7	0.50 12.70
46	55.75 1416.1	5.06 128.52	5.06 128.52	8.50 215.90	46.00 1168.4	47.38 1203.5	49.00 1244.0	28	2.00 50.80	52.00 1320.8	0.50 12.70
48	57.75 1466.9	5.25 133.35	5.25 133.35	8.81 223.77	48.00 1219.2	49.38 1254.3	51.25 1301.8	32	2.00 50.80	54.00 1371.6	0.50 12.70

Notes
- ASME B16.47 Series A flanges (≥ NPS 26) are MMS SP-44 flanges. MSS SP-44 also covers NPS 12 to NPS 24 flanges which are equivalent to ASME B16.5. MSS SP-44 is the only source for the NPS 22 flange dimensions above.
- Dimension B is to be specified by the purchaser. It corresponds to the pipe inside diameter.
- Flat face flanges may be provided at full thickness, C, or with raised face removed (the latter is nonstandard).
- WNF = Weld Neck Flange.
- The large end of the hub may be straight or tapered.
- For ring joint facings see page 8-6. For weld end bevel see page 8-5.
- For tolerances see page 8-4.

ASME B16.47 Series A (MSS SP-44) Flanges

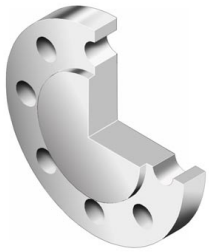

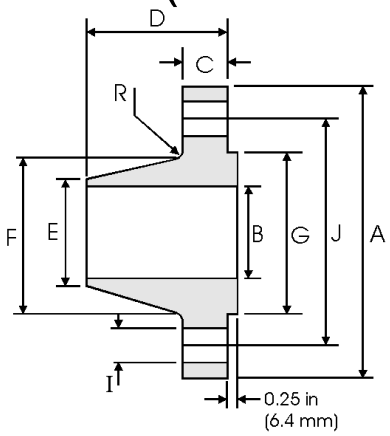

Weld Neck

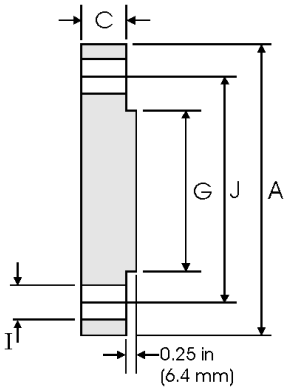

Blind

Class 400 lb

Pipe	Flange Data				Hub Data		Raised Face	Drilling Data			Radius
Nominal Pipe Size	A	B	C	D	E	F	G	H	I	J	R
	Overall Diameter	WNF Flange Thickness min	Blind Flange Thickness min	Overall Length WNF	Diameter at Weld Bevel	Hub Diameter	Face Diameter	Number of Holes	Bolt Hole Diameter	Diameter of Circle of Holes	Fillet
	in mm	in mm	in mm	in mm	in mm	in mm	in mm		in mm	in mm	in mm
22	33.00 838.20	2.88 73.15	2.88 73.15	6.75 171.45	22.00 558.80	25.25 641.35	25.25 641.35	24	1.75 44.45	29.25 742.95	0.44 11.18
26	38.25 971.55	3.50 88.90	3.88 98.55	7.62 193.55	26.00 660.40	28.62 726.95	29.50 749.30	28	1.88 47.75	34.50 876.30	0.44 11.18
28	40.75 1035.1	3.75 95.25	4.12 104.65	8.12 206.25	28.00 711.20	30.81 782.57	31.50 800.10	28	2.00 50.80	37.00 939.80	0.50 12.70
30	43.00 1092.2	4.00 101.60	4.38 111.25	8.62 218.95	30.00 762.00	32.94 836.68	33.75 857.25	28	2.12 53.85	39.25 996.95	0.50 12.70
32	45.25 1149.4	4.25 107.95	4.56 115.82	9.12 231.65	32.00 812.80	35.00 889.00	36.00 914.40	28	2.12 53.85	41.50 1054.1	0.50 12.70
34	47.50 1206.5	4.38 111.25	4.81 122.17	9.50 241.30	34.00 863.60	37.19 944.63	38.00 965.20	28	2.12 53.85	43.50 1104.9	0.56 14.22
36	50.00 1270.0	4.50 114.30	5.06 128.52	9.88 250.95	36.00 914.40	39.38 1000.3	40.25 1022.4	32	2.12 53.85	46.00 1168.4	0.56 14.22
38	47.50 1206.5	4.88 123.95	4.88 123.95	8.12 206.25	48.00 1219.2	39.50 1003.3	40.75 1035.1	32	1.88 47.75	44.00 1117.6	0.56 14.22
40	50.00 1270.0	5.12 130.05	5.12 130.05	8.50 215.90	40.00 1016.0	41.50 1054.1	43.00 1092.2	32	2.00 50.80	46.25 1174.8	0.56 14.22
42	52.00 1320.8	5.25 133.35	5.25 133.35	8.81 223.77	42.00 1066.8	43.62 1107.9	45.00 1143.0	32	2.00 50.80	48.25 1225.6	0.56 14.22
44	54.50 1384.3	5.50 139.70	5.50 139.70	9.18 233.17	44.00 1117.6	45.62 1158.7	47.25 1200.2	32	2.12 53.85	50.50 1282.7	0.56 14.22
46	56.75 1441.5	5.75 146.05	5.75 146.05	9.62 244.35	46.00 1168.4	47.75 1212.9	49.50 1257.3	36	2.12 53.85	52.75 1339.9	0.56 14.22
48	59.50 1511.3	6.00 152.40	6.00 152.40	10.12 257.05	48.00 1219.2	49.88 1267.0	51.50 1308.1	28	2.38 60.45	55.25 1403.4	0.56 14.22

Notes
- ASME B16.47 Series A flanges (≥ NPS 26) are MMS SP-44 flanges. MSS SP-44 also covers NPS 12 to NPS 24 flanges which are equivalent to ASME B16.5. MSS SP-44 is the only source for the NPS 22 flange dimensions above.
- Class 400 Series A dimensions at NPS 38 and larger also apply to Class 400 Series B flanges.
- Dimension B is to be specified by the purchaser. It corresponds to the pipe inside diameter.
- Flat face flanges may be provided at full thickness, C + raised face, or with raised face removed (the latter is nonstandard).
- WNF = Weld Neck Flange.
- The large end of the hub may be straight or tapered.
- For ring joint facings see page 8-6. For weld end bevel see page 8-5.
- For tolerances see page 8-4.

ASME B16.47 Series A (MSS SP-44) Flanges

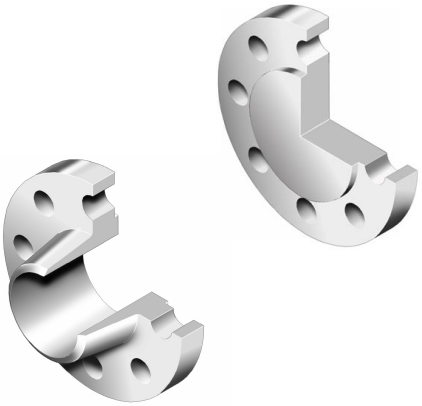

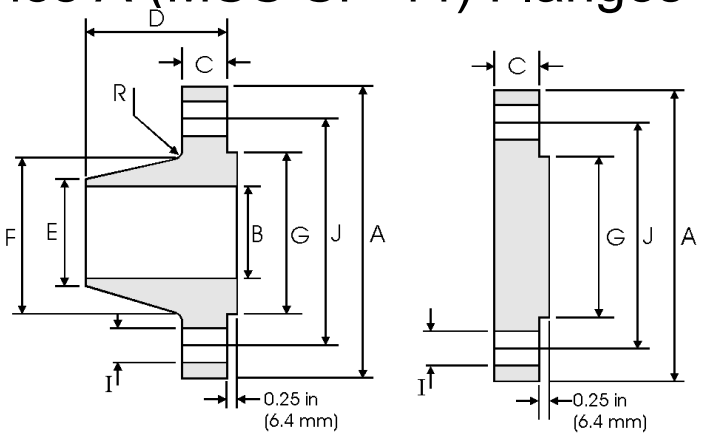

Class 600 lb

Pipe	Flange Data				Hub Data		Raised Face	Drilling Data			Radius
Nominal Pipe Size	A	B	C	D	E	F	G	H	I	J	R
	Overall Diameter	WNF Flange Thickness min	Blind Flange Thickness min	Overall Length WNF	Diameter at Weld Bevel	Hub Diameter	Face Diameter	Number of Holes	Bolt Hole Diameter	Diameter of Circle of Holes	Fillet
	in mm	in mm	in mm	in mm	in mm	in mm	in mm	in mm	in mm	in mm	in mm
22	34.25 869.95	3.75 95.25	3.75 95.25	7.75 196.85	22.00 558.80	26.25 666.75	25.25 641.35	24	1.88 47.75	30.62 777.75	0.44 11.18
26	40.00 1016.0	4.25 107.95	4.94 125.48	8.75 222.25	26.00 660.40	29.44 747.78	29.50 749.30	28	2.00 50.80	36.00 914.40	0.50 12.70
28	42.25 1073.2	4.38 111.25	5.19 131.83	9.25 234.95	28.00 711.20	31.62 803.15	31.50 800.10	28	2.12 53.85	38.00 965.20	0.50 12.70
30	44.50 1130.3	4.50 114.30	5.50 139.70	9.75 247.65	30.00 762.00	33.94 862.08	33.75 857.25	28	2.12 53.85	40.25 1022.4	0.50 12.70
32	47.00 1193.8	4.62 117.35	5.81 147.57	10.25 260.35	32.00 812.80	36.12 917.45	36.00 914.40	28	2.38 60.45	42.50 1079.5	0.50 12.70
34	49.00 1244.6	4.75 120.65	6.06 153.92	10.62 269.75	34.00 863.60	38.31 973.07	38.00 965.20	28	2.38 60.45	44.50 1130.3	0.56 14.22
36	51.75 1314.5	4.88 123.95	6.38 162.05	11.12 282.45	36.00 914.40	40.62 1031.75	40.25 1022.35	28	2.62 66.55	47.00 1193.0	0.56 14.22
38	50.00 1270.0	6.00 152.40	6.12 155.45	10.00 254.00	38.00 965.20	40.25 1022.35	41.50 1054.10	28	2.38 60.45	45.75 1162.1	0.56 14.22
40	52.00 1320.8	6.25 158.75	6.38 162.05	10.38 263.65	40.00 1016.0	42.25 1073.2	43.75 1111.3	32	2.38 60.45	47.75 1212.9	0.56 14.22
42	55.25 1403.4	6.62 168.15	6.75 171.45	11.00 279.40	42.00 1066.8	44.38 1127.3	46.00 1168.4	28	2.62 66.55	50.50 1282.7	0.56 14.22
44	57.25 1454.2	6.81 172.97	7.00 177.80	11.38 289.05	44.00 1117.6	46.50 1181.1	48.25 1225.6	32	2.62 66.55	52.50 1333.5	0.56 14.22
46	59.50 1511.3	7.06 179.32	7.31 185.67	11.81 299.97	46.00 1168.4	48.62 1235.0	50.25 1276.4	32	2.62 66.55	54.75 1390.7	0.56 14.22
48	62.75 1593.9	7.44 188.98	7.69 195.33	12.44 315.98	48.00 1219.2	50.75 1289.1	52.50 1333.5	32	2.88 73.15	57.50 1460.5	0.56 14.22

Notes
- ASME B16.47 Series A flanges (≥ NPS 26) are MMS SP-44 flanges. MSS SP-44 also covers NPS 12 to NPS 24 flanges which are equivalent to ASME B16.5. MSS SP-44 is the only source for the NPS 22 flange dimensions above.
- Class 600 Series A dimensions at NPS 38 and larger also apply to Class 600 Series B flanges.
- Dimension B is to be specified by the purchaser. It corresponds to the pipe inside diameter.
- Flat face flanges may be provided at full thickness, C + raised face, or with raised face removed (the latter is nonstandard).
- WNF = Weld Neck Flange.
- The large end of the hub may be straight or tapered.
- For ring joint facings see page 8-6. For weld end bevel see page 8-5.
- For tolerances see page 8-4.

ASME B16.47 Series A (MSS SP-44) Flanges

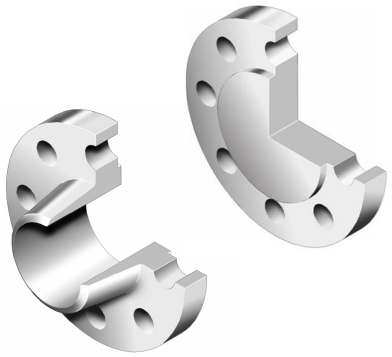

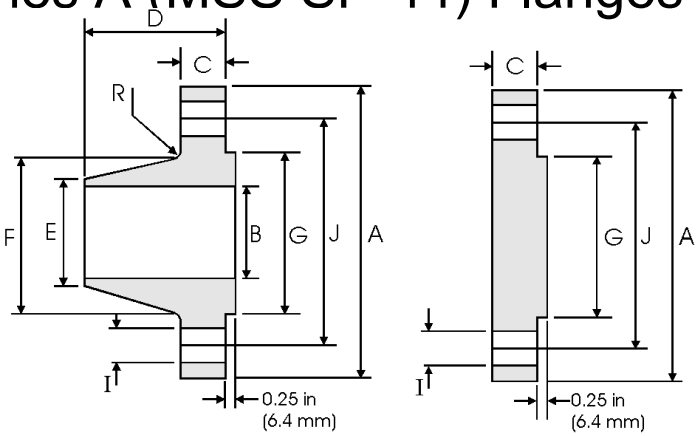

Class 900 lb

Pipe	Flange Data				Hub Data		Raised Face	Drilling Data			Radius
Nominal Pipe Size	A	B	C	D	E	F	G	H	I	J	R
	Overall Diameter	WNF Flange Thickness min	Blind Flange Thickness min	Overall Length WNF	Diameter at Weld Bevel	Hub Diameter	Face Diameter	Number of Holes	Bolt Hole Diameter	Diameter of Circle of Holes	Fillet
	in mm	in mm	in mm	in mm	in mm	in mm	in mm		in mm	in mm	in mm
26	42.75 1085.9	5.50 139.70	6.31 160.27	11.25 285.75	26.00 660.40	30.50 774.70	29.50 749.30	20	2.88 73.15	37.50 952.50	0.44 11.18
28	46.00 1168.4	5.62 142.75	6.75 171.45	11.75 298.45	28.00 711.20	32.75 831.85	31.50 800.10	20	3.12 79.25	40.25 1022.4	0.50 12.70
30	48.50 1231.9	5.88 149.35	7.18 182.37	12.25 311.15	30.00 762.00	35.00 889.00	33.75 857.25	20	3.12 79.25	42.75 1085.9	0.50 12.70
32	51.75 1314.5	6.25 158.75	7.62 193.55	13.00 330.20	32.00 812.80	37.25 946.15	36.00 914.40	20	3.38 85.85	45.50 1155.7	0.50 12.70
34	55.00 1397.0	6.50 165.10	8.06 204.72	13.75 349.25	34.00 863.60	39.62 1006.4	38.00 965.20	20	3.62 91.95	48.25 1225.6	0.56 14.22
36	57.50 1460.5	6.75 171.45	8.44 214.38	14.25 361.95	36.00 914.40	41.88 1063.8	40.25 1022.4	20	3.62 91.95	50.75 1289.1	0.56 14.22
38	57.50 1460.5	7.50 190.50	8.50 215.90	13.88 352.55	38.00 965.20	42.25 1073.2	43.25 1098.6	20	3.62 91.95	50.75 1289.1	0.75 19.05
40	59.50 1511.3	7.75 196.85	8.81 223.77	14.31 363.47	40.00 1016.0	44.38 1127.3	45.75 1162.1	24	3.62 91.95	52.75 1339.9	0.81 20.57
42	61.50 1562.1	8.12 206.25	9.12 231.65	14.62 371.35	42.00 1066.8	46.31 1176.3	47.75 1212.9	24	3.62 91.95	54.75 1390.7	0.81 20.57
44	64.88 1648.0	8.44 214.38	9.56 242.82	15.38 390.65	44.00 1117.6	48.62 1235.0	50.00 1270.0	24	3.88 98.55	57.62 1463.6	0.88 22.35
46	68.25 1733.6	8.88 225.55	10.06 255.52	16.18 410.97	46.00 1168.4	50.88 1292.4	52.50 1333.5	24	4.12 104.65	60.50 1536.7	0.88 22.35
48	70.25 1784.4	9.19 233.43	10.38 263.65	16.50 419.10	48.00 1219.2	52.88 1343.2	54.50 1384.3	24	4.12 104.65	62.50 1587.5	0.94 23.88

Notes
- ASME B16.47 Series A flanges (≥ NPS 26) are MMS SP-44 flanges. MSS SP-44 also covers NPS 12 to NPS 24 flanges which are equivalent to ASME B16.5. MSS SP-44 is the only source for the NPS 22 flange dimensions above.
- Class 900 Series A dimensions at NPS 38 and larger also apply to Class 900 Series B flanges.
- Dimension B is to be specified by the purchaser. It corresponds to the pipe inside diameter.
- Flat face flanges may be provided at full thickness, C + raised face, or with raised face removed (the latter is nonstandard).
- WNF = Weld Neck Flange.
- The large end of the hub may be straight or tapered.
- For ring joint facings see page 8-6. For weld end bevel see page 8-5.
- For tolerances see page 8-4.

ASME B16.47 Series B (API 605) Flanges

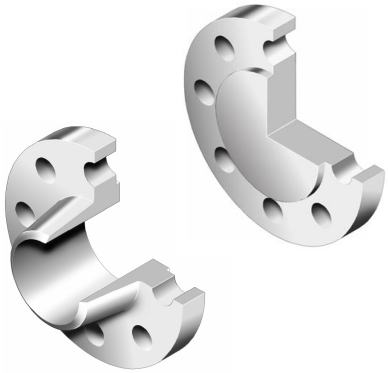

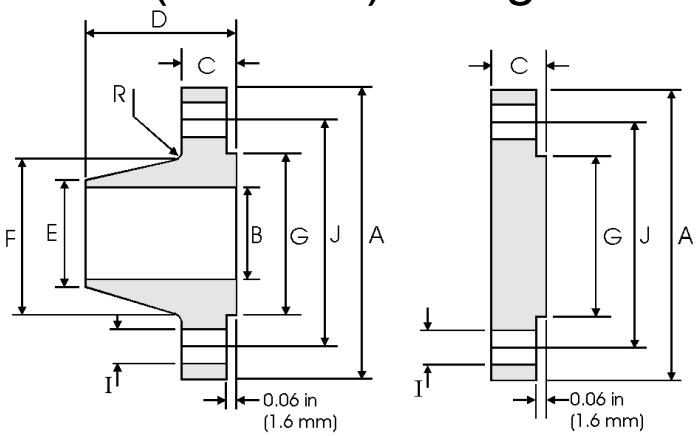

Class 75 lb

Pipe	Flange Data				Hub Data		Raised Face	Drilling Data			Radius
Nominal Pipe Size	A	B	C	D	E	F	G	H	I	J	R
	Overall Diameter	WNF Flange Thickness min	Blind Flange Thickness min	Overall Length WNF	Diameter at Weld Bevel	Hub Diameter	Face Diameter	Number of Holes	Bolt Hole Diameter	Diameter of Circle of Holes	Fillet
	in mm	in mm	in mm	in mm	in mm	in mm	in mm		in mm	in mm	in mm
26	30.00 762.00	1.31 33.27	1.31 33.27	2.31 58.67	26.06 661.92	26.62 676.15	27.75 704.85	36	0.75 19.05	28.50 723.90	0.31 7.87
28	32.00 812.80	1.31 33.27	1.31 33.27	2.44 61.98	28.06 712.72	28.62 726.95	29.75 755.65	40	0.75 19.05	30.50 774.70	0.31 7.87
30	34.00 863.60	1.31 33.27	1.31 33.27	2.56 65.02	30.06 763.52	30.62 777.75	31.75 806.45	44	0.75 19.05	32.50 825.50	0.31 7.87
32	36.00 914.40	1.38 35.05	1.44 36.58	2.75 69.85	32.06 814.32	32.62 828.55	33.75 857.25	48	0.75 19.05	34.50 876.30	0.31 7.87
34	38.00 965.20	1.38 35.05	1.50 38.10	2.88 73.15	34.06 865.12	34.62 879.35	35.75 908.05	52	0.75 19.05	36.50 927.10	0.31 7.87
36	40.69 1033.5	1.44 36.58	1.67 42.42	3.38 85.85	36.06 915.92	36.81 934.97	38.00 965.20	40	0.88 22.35	39.06 992.12	0.38 9.65
38	42.69 1084.3	1.50 38.10	1.75 44.45	3.50 88.90	38.06 966.72	38.81 985.77	40.00 1016.0	40	0.88 22.35	41.06 1042.9	0.38 9.65
40	44.69 1135.1	1.50 38.10	1.75 44.45	3.62 91.95	40.06 1017.5	40.81 1036.57	42.0 01066.8	44	0.88 22.35	43.06 1093.7	0.38 9.65
42	46.69 1185.9	1.56 39.62	1.88 47.75	3.75 95.25	42.06 1068.3	42.81 1087.37	44.00 1117.6	48	0.88 22.35	45.06 1144.5	0.38 9.65
44	49.25 1251.0	1.69 42.93	1.94 49.28	4.12 104.65	44.06 1119.1	44.88 1139.95	46.25 1174.8	36	1.00 25.40	47.38 1203.5	0.38 9.65
46	51.25 1301.8	1.75 44.45	2.00 50.80	4.25 107.95	46.06 1169.9	46.88 1190.75	48.25 1225.6	40	1.00 25.40	49.38 1254.3	0.38 9.65
48	53.25 1352.6	1.81 45.97	2.12 53.85	4.38 111.25	48.06 1220.7	48.88 1241.55	50.25 1276.4	44	1.00 25.40	51.38 1305.1	0.38 9.65

Notes
- ASME B16.47 Series B flanges are API 605 flanges. API 605 has been cancelled.
- Class 400 Series A dimensions at NPS 38 and larger also apply to Class 400 Series B flanges.
- Dimension B is to be specified by the purchaser. It corresponds to the pipe inside diameter.
- Flat face flanges may be provided at full thickness, C, or with raised face removed (the latter is nonstandard).
- WNF = Weld Neck Flange.
- The large end of the hub may be straight or tapered.
- For ring joint facings see page 8-6. For weld end bevel see page 8-5.
- For tolerances see page 8-4.

ASME B16.47 Series B (API 605) Flanges

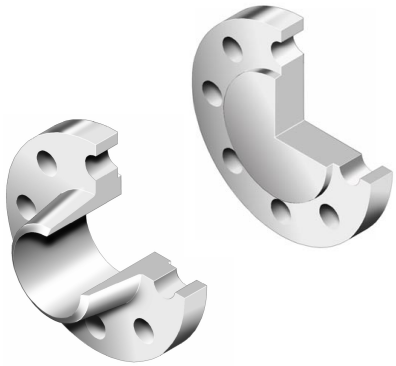

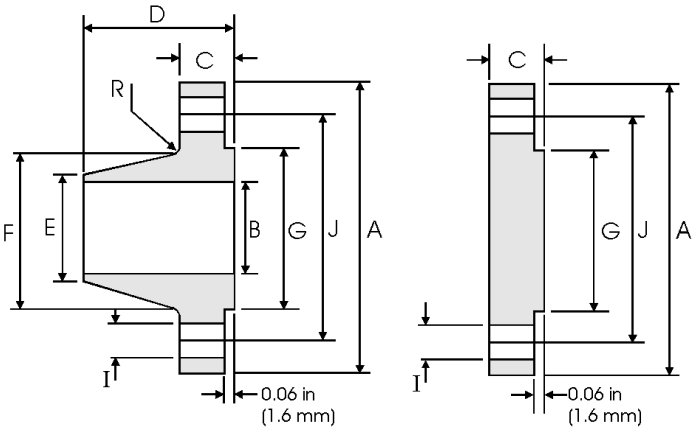

Class 150 lb

Pipe	Flange Data				Hub Data		Raised Face	Drilling Data			Radius
Nominal Pipe Size	A	B	C	D	E	F	G	H	I	J	R
	Overall Diameter	WNF Flange Thickness min	Blind Flange Thickness min	Overall Length WNF	Diameter at Weld Bevel	Hub Diameter	Face Diameter	Number of Holes	Bolt Hole Diameter	Diameter of Circle of Holes	Fillet
	in mm	in mm	in mm	in mm	in mm	in mm	in mm		in mm	in mm	in mm
26	30.94 785.88	1.62 41.15	1.75 44.45	3.50 88.90	26.06 661.92	26.94 684.28	28.00 711.20	36	0.88 22.35	29.31 744.47	0.38 9.65
28	32.94 836.68	1.75 44.45	1.88 47.75	3.75 95.25	28.06 712.72	28.94 735.08	30.00 762.00	40	0.88 22.35	31.31 795.27	0.38 9.65
30	34.94 887.48	1.75 44.45	2.00 50.80	3.94 100.08	30.06 763.52	31.00 787.40	32.00 812.80	44	0.88 22.35	33.31 846.07	0.38 9.65
32	37.06 941.32	1.81 45.97	2.12 53.85	4.25 107.95	32.06 814.32	33.06 839.72	34.00 863.60	48	0.88 22.35	35.44 900.18	0.38 9.65
34	39.56 1004.8	1.94 49.28	2.25 57.15	4.34 110.24	34.06 865.12	35.12 892.05	36.25 920.75	40	1.00 25.40	37.69 957.33	0.38 9.65
36	41.62 1057.1	2.06 52.32	2.31 58.67	4.62 117.35	36.06 915.92	37.19 944.63	38.25 971.55	44	1.00 25.40	39.75 1009.7	0.38 9.65
38	44.25 1124.0	2.12 53.85	2.50 63.50	4.88 123.95	38.12 968.25	39.25 996.95	40.25 1022.4	40	1.12 28.45	42.12 1069.8	0.38 9.65
40	46.25 1174.8	2.19 55.63	2.62 66.55	5.06 128.52	40.12 1019.0	41.31 1049.3	42.50 1079.5	44	1.12 28.45	44.12 1120.6	0.38 9.65
42	48.25 1225.6	2.31 58.67	2.69 68.33	5.25 133.35	42.12 1069.8	43.38 1101.9	44.50 1130.3	48	1.12 28.45	46.12 1171.4	0.44 11.18
44	50.25 1276.4	2.38 60.45	2.81 71.37	5.38 136.65	44.12 1120.6	45.38 1152.7	46.50 1181.1	52	1.12 28.45	48.12 1222.2	0.44 11.18
46	52.81 1341.4	2.44 61.98	2.94 74.68	5.69 144.53	46.12 1171.4	47.44 1205.0	48.62 1234.9	40	1.25 31.75	50.56 1284.2	0.44 11.18
48	54.81 1392.2	2.56 65.02	3.06 77.72	5.88 149.35	48.12 1222.2	49.50 1257.3	50.75 1289.1	44	1.25 31.75	52.56 1335.0	0.44 11.18

Notes
- ASME B16.47 Series B flanges are API 605 flanges. API 605 has been cancelled.
- Dimension B is to be specified by the purchaser. It corresponds to the pipe inside diameter.
- Flat face flanges may be provided at full thickness, C, or with raised face removed (the latter is nonstandard).
- WNF = Weld Neck Flange.
- The large end of the hub may be straight or tapered.
- For ring joint facings see page 8-6. For weld end bevel see page 8-5.
- For tolerances see page 8-4.

ASME B16.47 Series B (API 605) Flanges

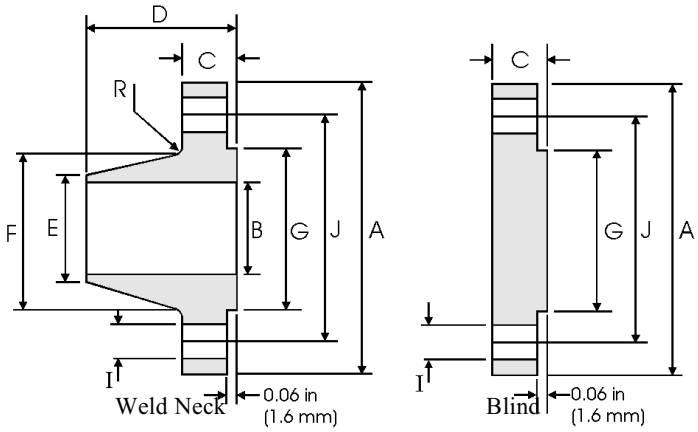

Class 300 lb

Pipe	Flange Data				Hub Data		Raised Face	Drilling Data			Radius
Nominal Pipe Size	A	B	C	D	E	F	G	H	I	J	R
	Overall Diameter	WNF Flange Thickness min	Blind Flange Thickness min	Overall Length WNF	Diameter at Weld Bevel	Hub Diameter	Face Diameter	Number of Holes	Bolt Hole Diameter	Diameter of Circle of Holes	Fillet
	in mm	in mm	in mm	in mm	in mm	in mm	in mm		in mm	in mm	in mm
26	34.12 866.65	3.50 88.90	3.50 88.90	5.69 144.53	26.19 665.23	27.62 701.55	29.00 736.60	32	1.38 35.05	31.62 803.15	0.56 14.22
28	36.25 920.75	3.50 88.90	3.50 88.90	5.88 149.35	28.19 716.03	29.75 755.65	31.00 787.40	36	1.38 35.05	33.75 857.25	0.56 14.22
30	39.00 990.60	3.69 93.73	3.69 93.73	6.22 157.99	30.25 768.35	32.00 812.80	33.25 844.55	36	1.50 38.10	36.25 920.75	0.56 14.22
32	41.50 1054.1	4.06 103.12	4.06 103.12	6.62 168.15	32.25 819.15	34.00 863.60	35.50 901.70	32	1.62 41.15	38.50 977.90	0.62 15.75
34	43.62 1107.9	4.06 103.12	4.06 103.12	6.81 172.97	34.25 869.95	36.12 917.45	37.50 952.50	36	1.62 41.15	40.62 1031.7	0.62 15.75
36	46.12 1171.4	4.06 103.12	4.06 103.12	7.12 180.85	36.25 920.75	38.00 965.20	39.75 1009.7	32	1.75 44.45	42.88 1089.2	0.62 15.75
38	48.12 1222.2	4.38 111.25	4.38 111.25	7.56 192.02	38.25 971.55	40.00 1016.0	41.75 1060.5	36	1.75 44.45	44.88 1140.0	0.62 15.75
40	50.12 1273.0	4.56 115.82	4.56 115.82	7.81 198.37	40.25 1022.4	42.00 1066.8	43.88 1114.6	40	1.75 44.45	46.88 1190.8	0.62 15.75
42	52.50 1333.5	4.69 119.13	4.69 119.13	8.06 204.72	42.31 1074.7	44.00 1117.6	46.00 1168.4	36	1.88 47.75	49.00 1244.6	0.62 15.75
44	54.50 1384.3	5.00 127.00	5.00 127.00	8.44 214.38	44.31 1125.5	46.19 1173.2	48.00 1219.2	40	1.88 47.75	51.00 1295.4	0.62 15.75
46	57.50 1460.5	5.06 128.52	5.12 130.05	8.75 222.25	46.31 1176.3	48.38 1228.9	50.00 1270.0	36	2.00 50.80	53.75 1365.3	0.62 15.75
48	59.50 1511.3	5.06 128.52	5.31 134.87	8.81 223.77	48.31 1227.1	50.31 1277.9	52.25 1327.2	40	2.00 50.80	55.75 1416.1	0.62 15.75

Notes
- ASME B16.47 Series B flanges are API 605 flanges. API 605 has been cancelled.
- Dimension B is to be specified by the purchaser. It corresponds to the pipe inside diameter.
- Flat face flanges may be provided at full thickness, C, or with raised face removed (the latter is nonstandard).
- WNF = Weld Neck Flange.
- The large end of the hub may be straight or tapered.
- For ring joint facings see page 8-6. For weld end bevel see page 8-5.
- For tolerances see page 8-4.

ASME B16.47 Series B (API 605) Flanges

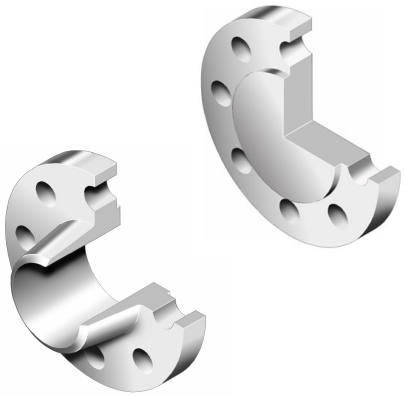

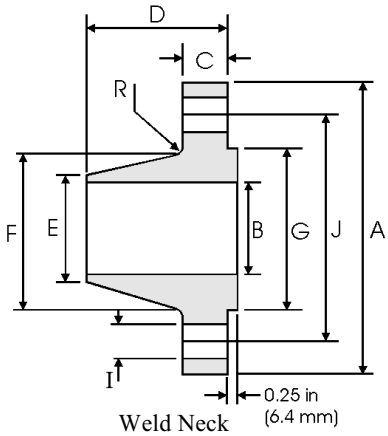

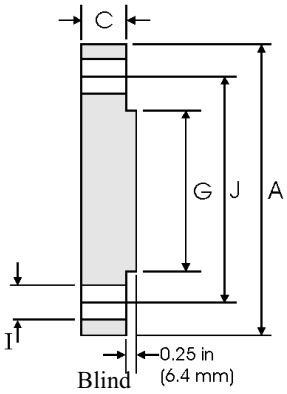

Class 400 lb, 600 lb and 900 lb

Pipe	Flange Data				Hub Data		Raised Face	Drilling Data			Radius
Nominal Pipe Size	A	B	C	D	E	F	G	H	I	J	R
	Overall Diameter	WNF Flange Thickness min	Blind Flange Thickness min	Overall Length WNF	Diameter at Weld Bevel	Hub Diameter	Face Diameter	Number of Holes	Bolt Hole Diameter	Diameter of Circle of Holes	Fillet
	in mm	in mm	in mm	in mm	in mm	in mm	in mm		in mm	in mm	in mm
Class 400											
26	33.50 850.90	3.50 88.90	3.50 88.90	5.88 149.35	26.00 660.40	27.12 688.85	28.00 711.20	28	1.50 38.10	30.75 781.05	0.44 11.18
28	36.00 914.40	3.75 95.25	3.75 95.25	6.25 158.90	28.00 711.20	29.12 739.65	30.00 762.00	24	1.62 41.15	33.00 838.20	0.50 12.70
30	38.25 971.55	4.00 101.60	4.00 101.60	6.69 169.93	30.00 762.00	31.25 793.75	32.25 590.55	28	1.62 41.15	35.25 895.35	0.50 12.70
32	40.75 1035.1	4.25 107.95	4.25 107.95	7.06 179.32	32.0 0812.80	33.25 844.55	34.38 873.25	28	1.75 44.45	37.50 952.50	0.50 12.70
34	42.75 1085.9	4.38 111.25	4.38 111.25	7.38 187.45	34.00 863.60	35.38 898.65	36.50 927.10	32	1.75 44.45	39.50 1003.3	0.56 14.22
36	45.50 1155.7	4.69 119.13	4.69 119.13	7.88 200.15	36.00 914.40	37.50 952.50	38.62 980.95	28	1.88 47.75	42.00 1066.8	0.56 14.22
Class 600											
26	35.00 889.00	4.38 111.25	4.38 111.25	7.12 180.85	26.00 660.40	27.50 698.50	28.62 726.95	28	1.75 44.45	31.75 806.45	0.50 12.70
28	37.50 952.50	4.56 115.82	4.56 115.82	7.50 190.50	28.00 711.20	29.62 752.35	30.88 784.35	28	1.88 47.75	34.00 863.60	0.50 12.70
30	40.25 1022.4	4.94 125.48	5.00 127.00	8.06 204.72	30.00 762.00	31.75 806.45	33.12 841.25	28	2.00 50.80	36.50 927.10	0.50 12.70
32	42.75 1085.9	5.12 130.05	5.31 134.87	8.50 215.90	32.00 812.80	33.88 860.55	35.25 895.35	28	2.12 53.85	38.75 984.25	0.50 12.70
34	45.75 1162.1	5.56 141.22	5.68 144.27	9.19 233.43	34.00 863.60	36.00 914.40	37.50 952.50	24	2.38 60.45	41.50 1054.1	0.56 14.22
36	47.75 1212.9	5.75 146.05	5.94 150.88	9.56 242.82	36.00 914.40	38.12 968.25	39.75 1009.7	28	2.38 60.45	43.50 1104.9	0.56 14.22
Class 900											
26	40.25 1022.4	5.31 134.87	6.06 153.92	10.19 258.83	26.00 660.40	29.25 742.95	30.00 762.00	20	2.62 66.55	35.50 901.70	0.44 11.18
28	43.50 1104.9	5.81 147.57	6.56 166.62	10.88 276.35	28.00 711.20	31.38 797.05	32.25 819.15	20	2.88 73.15	38.25 971.55	0.50 12.70
30	46.50 1181.1	6.12 155.45	6.93 176.02	11.38 289.05	30.00 762.00	33.50 850.90	34.50 876.30	20	3.12 79.25	40.75 1035.1	0.50 12.70
32	48.75 1238.3	6.31 160.27	7.31 185.67	11.94 303.28	32.00 812.80	35.75 908.05	36.50 927.10	20	3.12 79.25	43.00 1092.2	0.50 12.70
34	51.75 1314.5	6.75 171.45	7.68 195.07	12.56 319.02	34.00 863.60	37.88 962.15	39.00 990.60	20	3.38 85.85	45.50 1155.7	0.56 14.22
36	53.00 1346.2	6.81 172.97	7.94 201.68	12.81 325.37	36.00 914.40	40.00 1016.0	40.50 1028.7	24	3.12 79.25	47.25 1200.2	0.56 14.22

Notes
- ASME B16.47 Series B flanges are API 605 flanges. API 605 has been cancelled.
- Refer to ASME B16.47 Series A dimensions for sizes NPS 38 and larger (see pages 8-48 to 8-50).
- Dimension B is to be specified by the purchaser. It corresponds to the pipe inside diameter.
- WNF = Weld Neck Flange.
- Flat face flanges may be provided at full thickness, C + raised face, or with raised face removed (the latter is nonstandard).
- The large end of the hub may be straight or tapered.
- For ring joint facings see page 8-6. For weld end bevel see page 8-5. For tolerances see page 8-4.

BS 3293 : 1960

British Standard BS 3293 : 1960 - Carbon Steel Pipe Flanges (over 24 inches nominal size) for the Petroleum Industry, covers Class 150 lb to 600 lb weld neck and slip on flanges.

Dimensions and Tolerances

Tolerances on flange dimensions (BS 3293 : 1960)

Dimension		Tolerance	
		in	mm
Weld Neck and Slip On Flanges (pages 8-56 to 8-59)	G (raised face diameter)	$\pm^{1}/_{64}$	±0.40
	C (flange thickness)	$+^{3}/_{16}$, -0	+4.76, -0
	D (overall length)	$+^{1}/_{8}$	±3.18
	E (outside diameter at welding end of weld neck hub)	$+^{5}/_{32}$, $-^{1}/_{32}$	+3.97, -0.79
	B (inside diameter of weld neck flange)	$+^{1}/_{8}$, $-^{1}/_{16}$	+3.18, -1.59
	B (inside diameter of slip on flange)	$+^{1}/_{16}$, -0	+1.59, -0
Ring Joint Facing on Weld Neck and Slip On Flanges (see below)	L (depth of groove)	$+^{1}/_{64}$, -0	+0.40, -0
	M (width of groove)	±0.008	±0.20
	K (pitch diameter of groove)	±0.005	±0.13

Ring Joint Facings - BS 3293

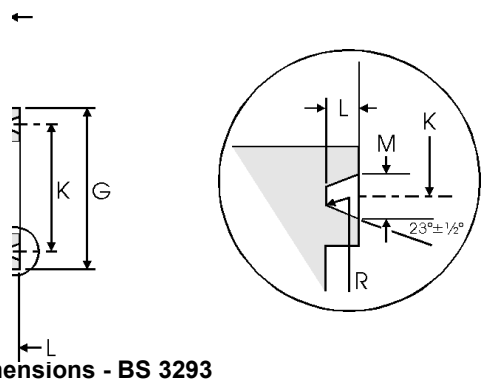

Note
- Values for minimum flange thickness, C, and overall length, D, are detailed in the flange tables.
- For ring joint tolerances see above.
- R = $^{1}/_{16}$ in (0.40 mm) max, corner radius at bottom of groove.

Ring joint facing dimensions - BS 3293

Class (lb)				Groove/Ring Number	Raised Face	Groove			Weight		
150	300	400	600		G	K	L	M	kg/piece		
Nominal Pipe Size (NPS)					Face Diameter min	Pitch Diameter	Depth	Width	Class 300 lb	Class 400 lb	Class 600 lb
					in mm	in mm	in mm	in mm	WNF Slip on	WNF Slip on	WNF Slip on
	26	26	26	R93	$31^{7}/_{8}$ 809.6	$29^{1}/_{2}$ 749.3	$^{1}/_{2}$ 12.7	$^{25}/_{32}$ 19.8	298 270	349 304	446 417
	28	28	28	R94	$33^{7}/_{8}$ 860.4	$31^{1}/_{2}$ 800.1	$^{1}/_{2}$ 12.7	$^{25}/_{32}$ 19.8	360 333	409 364	518 482
	30	30	30	R95	$36^{1}/_{8}$ 917.6	$33^{3}/_{4}$ 857.2	$^{1}/_{2}$ 12.7	$^{25}/_{32}$ 19.8	412 376	465 419	570 537
	32	32	32	R96	$38^{3}/_{4}$ 984.2	36 914.4	$^{9}/_{16}$ 14.3	$^{29}/_{32}$ 23.0	465 425	539 482	697 622
	34	34	34	R97	$40^{3}/_{4}$ 1035.0	38 965.2	$^{9}/_{16}$ 14.3	$^{29}/_{32}$ 23.0	536 492	608 540	735 670
	36	36	36	R98	43 1092.2	$40^{1}/_{4}$ 1022.3	$^{9}/_{16}$ 14.3	$^{29}/_{32}$ 23.0	595 548	689 621	800 764

Note
- Weights are based on manufacturer's data and are approximate.

Weld Neck and Slip On Flanges - BS 3293

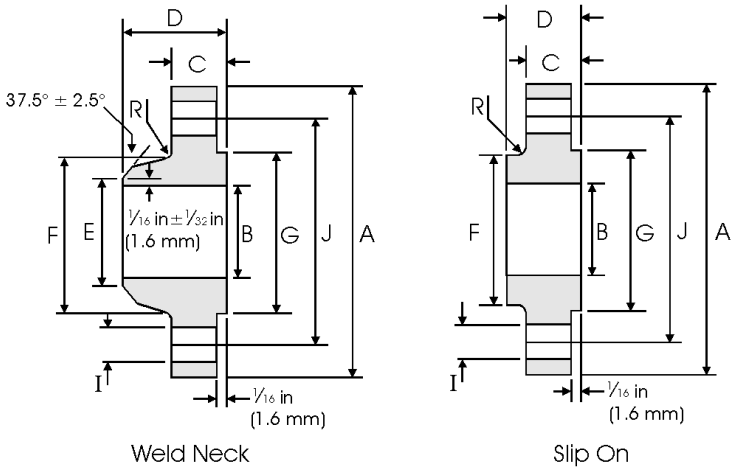

Class 150 lb

Pipe	Flange Data					Hub Data		Raised Face	Drilling Data			Radius	Weight
Nominal Pipe Size	A	B	C	D		E	F	G	H	I	J	R	
	Overall Diameter	Slip on Inside Diameter	Flange Thickness	WNF Overall Length	Slip on Overall Length	WNF Diameter at Weld Bevel	WNF / Slip on Hub Diameter	Face Diameter	Number of Holes	Bolt Hole Diam.	Diameter of Circle of Holes	Fillet	kg/ piece
	in mm	in mm	in mm	in mm	in mm	in mm	in mm	in mm		in mm	in mm	in mm	WNF Slip On
26	34 1/4 869.9	26 1/4 666.7	2 50.8	5 127.0	3 3/8 85.7	26 660.4	28 1/2 723.9	29 1/4 742.9	24	1 3/8 34.9	31 3/4 806.4	1/4 6.35	118 107
28	36 1/2 927.1	28 1/4 717.6	2 1/16 52.4	5 1/16 128.6	3 7/16 87.3	28 711.2	30 3/4 781.0	31 1/4 793.7	28	1 3/8 34.9	34 863.6	1/4 6.35	134 122
30	38 3/4 984.2	30 1/4 768.3	2 1/8 54.0	5 1/8 130.2	3 1/2 88.9	30 762.0	32 3/4 831.8	33 3/4 857.2	28	1 3/8 34.9	36 914.4	1/4 6.35	153 138
32	41 3/4 1060.4	32 1/4 819.1	2 1/4 57.1	5 1/4 133.3	3 5/8 92.1	32 812.8	35 889.0	35 3/4 908.0	28	1 5/8 41.3	38 1/2 977.9	5/16 7.94	190 170
34	43 3/4 1111.2	34 1/4 869.9	2 5/16 58.7	5 5/16 134.9	3 11/16 93.7	34 863.6	37 939.8	37 3/4 958.8	32	1 5/8 41.3	40 1/2 1028.7	5/16 7.94	212 184
36	46 1168.4	36 1/4 920.7	2 3/8 60.3	5 3/8 136.5	3 3/4 95.2	36 914.4	39 1/4 996.9	40 1/4 1022.3	32	1 5/8 41.3	42 3/4 1085.8	5/16 7.94	242 211
38	48 3/4 1238.2	38 1/4 971.5	2 3/8 60.3	5 3/8 136.5	3 3/4 95.2	38 965.2	41 3/4 1060.4	42 1/4 1073.1	32	1 5/8 41.3	45 1/4 1149.3	3/8 9.53	284 249
40	50 3/4 1289.0	40 1/4 1022.3	2 1/2 63.5	5 1/2 139.7	3 7/8 98.4	40 1016.0	43 3/4 1111.2	44 1/4 1123.9	36	1 5/8 41.3	47 1/4 1200.1	3/8 9.53	311 272
42	53 1346.2	42 1/4 1073.2	2 5/8 66.7	5 5/8 142.9	4 101.6	42 1066.8	46 1168.4	47 1193.8	36	1 5/8 41.3	49 1/2 1257.3	3/8 9.53	358 313
44	55 1/4 1403.3	44 1/4 1123.9	2 5/8 66.7	5 5/8 142.9	4 101.6	44 1117.6	48 1219.2	49 1244.6	40	1 5/8 41.3	51 3/4 1314.4	7/16 11.11	376 331
46	57 1/4 1454.2	46 1/4 1174.7	2 11/16 68.3	5 11/16 144.5	4 1/16 103.2	46 1168.4	50 1270.0	51 1295.4	40	1 5/8 41.3	53 3/4 1365.2	7/16 11.11	399 349
48	59 1/2 1511.1	48 1/4 1225.5	2 3/4 69.9	5 3/4 146.1	4 1/8 104.8	48 1219.2	52 1/4 1327.2	53 1/2 1358.9	44	1 5/8 41.3	56 1422.4	7/16 11.11	440 381

Notes
- For weld neck flanges, dimension B is to be specified by the purchaser. It corresponds to the pipe inside diameter.
- For slip on flanges, the hub may be cylindrical or have a draft of ≤ 7° on the outside surface.
- WNF = Weld Neck Flange.
- Weights are based on manufacturer's data and are approximate.
- For ring joint facings see page 8-55.
- For tolerances see page 8-55.

Weld Neck and Slip On Flanges - BS 3293

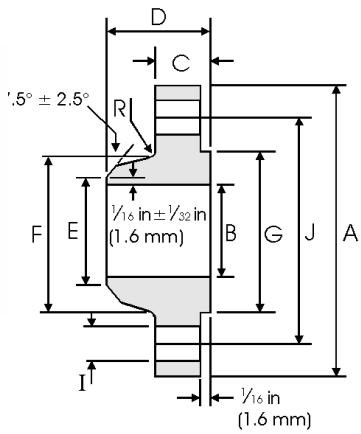

Weld Neck

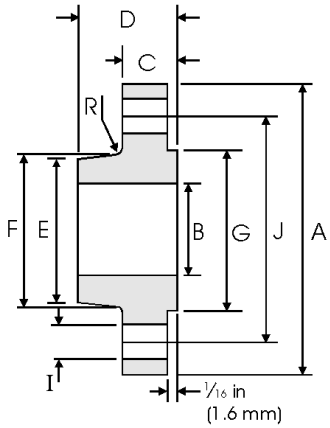

Slip On

Class 300 lb

Pipe	Flange Data				Hub Data			Raised Face	Drilling Data			Radius	Weight
Nominal Pipe Size	A	B	C	D	E		F	G	H	I	J	R	
	Overall Diameter	Slip on Inside Diameter	Flange Thickness	WNF / Slip on Overall Length	WNF Diam. at Weld Bevel	Slip on Hub Diam. at Small End	Hub Diameter	Face Diameter	Number of Holes	Bolt Hole Diam.	Diameter of Circle of Holes	Fillet	kg/ piece
	in mm	in mm	in mm	in mm	in mm	in mm	in mm	in mm	in mm	in mm	in mm	in mm	WNF Slip On
26	38 1/4 971.5	26 1/4 666.7	3 1/8 79.4	7 1/4 184.1	26 1/4 666.7	27 1/16 687.4	28 3/8 720.7	29 1/2 749.3	28	1 3/4 44.4	34 1/2 876.3	3/8 9.53	279 251
28	40 3/4 1035.0	28 1/4 717.6	3 3/8 85.7	7 3/4 196.8	28 1/4 717.5	29 1/8 739.7	30 1/2 774.7	31 1/2 800.1	28	1 3/4 44.4	37 939.8	7/16 11.11	340 313
30	43 1092.2	30 1/4 768.3	3 5/8 92.1	8 1/4 209.5	30 1/4 768.3	31 3/16 792.2	32 9/16 827.2	33 3/4 857.2	28	1 7/8 47.6	39 1/4 996.9	7/16 11.11	390 354
32	45 1/4 1149.3	32 1/4 819.1	3 7/8 98.4	8 3/4 222.2	32 1/4 819.1	33 1/4 844.6	34 11/16 881.1	36 914.4	28	2 50.8	41 1/2 1054.1	7/16 11.11	435 395
34	47 1/2 1206.5	34 1/4 869.9	4 101.6	9 1/8 231.8	34 5/16 871.5	35 5/16 896.9	36 7/8 936.6	38 965.2	28	2 50.8	43 1/2 1104.9	1/2 12.7	504 460
36	50 1270.0	36 1/4 920.7	4 1/8 104.8	9 1/2 241.3	36 5/16 922.3	37 3/8 949.3	39 990.6	40 1/4 1022.3	32	2 1/8 54.0	46 1168.4	1/2 12.7	560 513

Notes
- For weld neck flanges, dimension B is to be specified by the purchaser. It corresponds to the pipe inside diameter.
- For slip on flanges, the hub may be cylindrical or have a draft of ≤ 7° on the outside surface.
- WNF = Weld Neck Flange.
- Weights are based on manufacturer's data and are approximate.
- For ring joint facings see page 8-55.
- For tolerances see page 8-55.

Weld Neck and Slip On Flanges - BS 3293

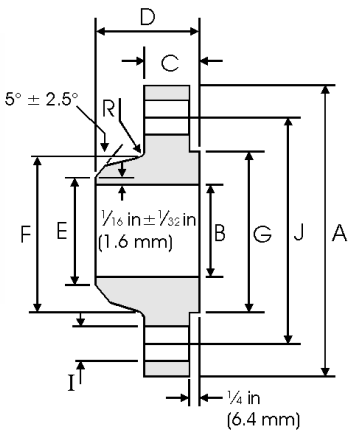

Weld Neck

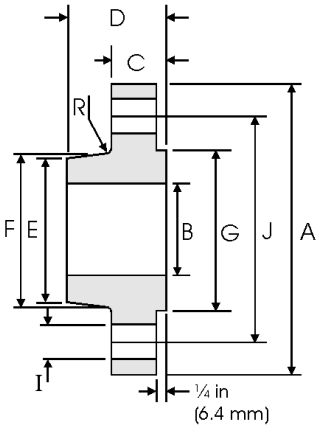

Slip On

Class 400 lb

Pipe	Flange Data				Hub Data			Raised Face	Drilling Data			Radius	Weight
Nominal Pipe Size	A	B	C	D	E		F	G	H	I	J	R	
	Overall Diameter	Slip on Inside Diameter	Flange Thickness	WNF / Slip on Overall Length	WNF Diam. at Weld Bevel	Slip on Hub Diam. at Small End	Hub Diameter	Face Diameter	Number of Holes	Bolt Hole Diam.	Diameter of Circle of Holes	Fillet	kg/ piece
	in mm	in mm	in mm	in mm	in mm	in mm	in mm	in mm		in mm	in mm	in mm	WNF Slip On
26	38 1/4 971.5	26 1/4 666.7	3 1/2 88.9	7 5/8 193.7	26 5/16 668.3	27 5/16 693.7	28 5/8 727.1	29 1/2 749.3	28	1 7/8 47.6	34 1/2 876.3	7/16 11.11	340 295
28	40 3/4 1035.0	28 1/4 717.6	3 3/4 95.2	8 1/8 206.4	28 5/16 719.1	29 3/8 746.1	30 13/16 782.6	31 1/2 800.1	28	2 50.8	37 939.8	1/2 12.7	399 354
30	43 1092.2	30 1/4 768.3	4 101.6	8 5/8 219.1	30 5/16 769.6	31 1/2 800.1	32 15/16 836.6	33 3/4 857.2	28	2 1/8 54.0	39 1/4 996.9	1/2 12.7	454 408
32	45 1/4 1149.3	32 1/4 819.1	4 1/4 107.9	9 1/8 231.8	32 3/8 822.3	33 9/16 852.5	35 889.0	36 914.4	28	2 1/8 54.0	41 1/2 1054.1	1/2 12.7	522 465
34	47 1/2 1206.5	34 1/4 869.9	4 3/8 111.1	9 1/2 241.3	34 3/8 873.1	35 5/8 904.9	37 3/16 944.6	38 965.2	28	2 1/8 54.0	43 1/2 1104.9	9/16 14.29	590 522
36	50 1270.0	36 1/4 920.8	4 1/2 114.3	9 7/8 250.8	36 7/16 925.5	37 3/4 958.8	39 7/8 1012.9	40 1/4 1022.3	32	2 1/8 54.0	46 1168.4	9/16 14.29	669 601

Notes
- For weld neck flanges, dimension B is to be specified by the purchaser. It corresponds to the pipe inside diameter.
- For slip on flanges, the hub may be cylindrical or have a draft of ≤ 7° on the outside surface.
- WNF = Weld Neck Flange.
- Weights are based on manufacturer's data and are approximate.
- For ring joint facings see page 8-55.
- For tolerances see page 8-55.

Weld Neck and Slip On Flanges - BS 3293

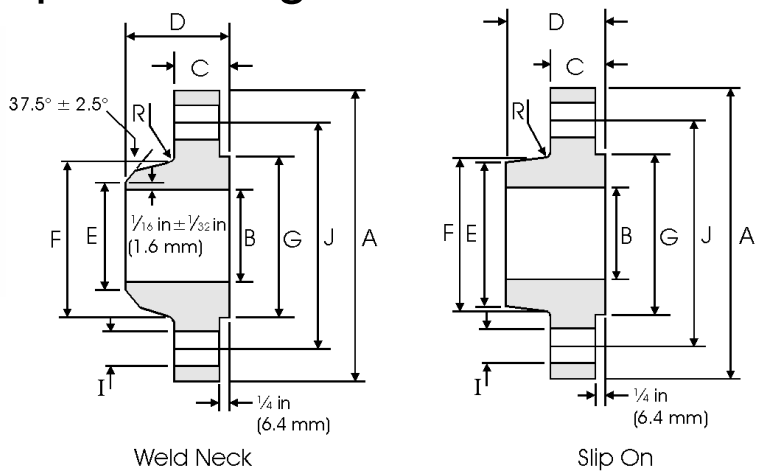

Class 600 lb

Pipe	Flange Data				Hub Data			Raised Face	Drilling Data			Radius	Weight
Nominal Pipe Size	A	B	C	D	E		F	G	H	I	J	R	
	Overall Diameter	Slip on Inside Diameter	Flange Thickness	WNF / Slip on Overall Length	WNF Diam. at Weld Bevel	Slip on Hub Diam. at Small Lend	Hub Diameter	Face Diameter	Number of Holes	Bolt Hole Diam.	Diameter of Circle of Holes	Fillet	kg/ piece
	in mm	in mm	in mm	in mm	in mm	in mm	in mm	in mm		in mm	in mm	in mm	WNF Slip On
26	40 1016.0	26 1/4 666.7	4 1/4 107.9	8 3/4 222.2	26 7/16 671.52	27 13/16 706.4	29 7/16 747.7	29 1/2 749.3	28	2 50.8	36 914.4	9/16 14.29	437 408
28	42 1/4 1073.1	28 1/4 717.6	4 3/8 111.1	9 1/4 234.9	28 1/2 723.9	29 15/16 760.4	31 5/8 803.3	31 1/2 800.1	28	2 1/8 54.0	38 965.2	5/8 15.88	508 472
30	44 1/2 1130.3	30 1/4 768.3	4 1/2 114.3	9 3/4 247.6	30 1/2 774.7	32 1/16 814.4	33 15/16 862.0	33 3/4 857.2	28	2 1/8 54.0	40 1/4 1022.3	11/16 17.46	559 526
32	47 1193.8	32 1/4 819.1	4 5/8 117.5	10 1/4 260.3	32 1/2 825.5	34 3/16 868.4	36 1/8 917.6	36 914.4	28	2 3/8 60.3	42 1/2 1079.5	11/16 17.46	680 605
34	49 1244.6	34 1/4 869.9	4 3/4 120.6	10 5/8 269.9	34 9/16 877.9	36 5/16 922.3	38 5/16 973.1	38 965.2	28	2 3/8 60.3	44 1/2 1130.3	3/4 19.05	717 652
36	51 3/4 1314.4	36 1/4 920.7	4 7/8 123.8	11 1/8 282.6	36 9/16 928.7	38 7/16 976.3	40 5/8 1031.9	40 1/4 1022.3	28	2 5/8 66.7	47 1193.8	3/4 19.05	780 744

Notes
- For weld neck flanges, dimension B is to be specified by the purchaser. It corresponds to the pipe inside diameter.
- For slip on flanges, the hub may be cylindrical or have a draft of ≤ 7° on the outside surface.
- WNF = Weld Neck Flange.
- Weights are based on manufacturer's data and are approximate.
- For ring joint facings see page 8-55.
- For tolerances see page 8-55.

Weld Neck and Slip On Flanges - BS 3293

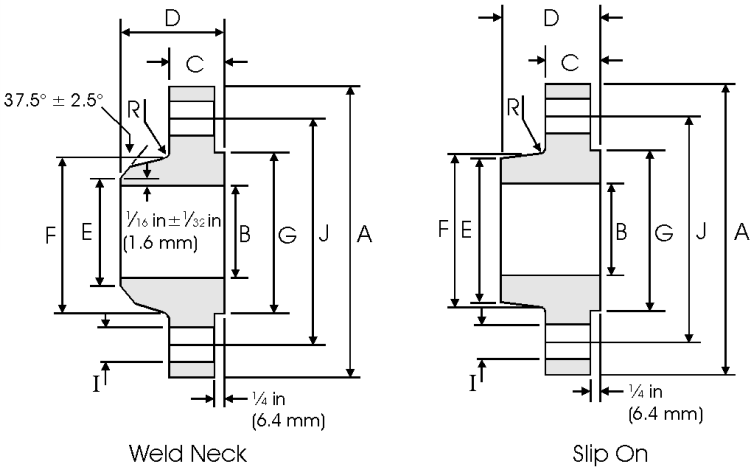

Class 600 lb

Pipe	Flange Data				Hub Data			Raised Face	Drilling Data			Radius	Weight
Nominal Pipe Size	A	B	C	D	E		F	G	H	I	J	R	
	Overall Diameter	Slip on Inside Diameter	Flange Thickness	WNF / Slip on Overall Length	WNF Diam. at Weld Bevel	Slip on Hub Diam. at Small Lend	Hub Diameter	Face Diameter	Number of Holes	Bolt Hole Diam.	Diameter of Circle of Holes	Fillet	kg/ piece
	in mm	in mm	in mm	in mm	in mm	in mm	in mm	in mm		in mm	in mm	in mm	WNF Slip On
26	40 1016.0	26 1/4 666.7	4 1/4 107.9	8 3/4 222.2	26 7/16 671.52	27 13/16 706.4	29 7/16 747.7	29 1/2 749.3	28	2 50.8	36 914.4	9/16 14.29	437 408
28	42 1/4 1073.1	28 1/4 717.6	4 3/8 111.1	9 1/4 234.9	28 1/2 723.9	29 15/16 760.4	31 5/8 803.3	31 1/2 800.1	28	2 1/8 54.0	38 965.2	5/8 15.88	508 472
30	44 1/2 1130.3	30 1/4 768.3	4 1/2 114.3	9 3/4 247.6	30 1/2 774.7	32 1/16 814.4	33 15/16 862.0	33 3/4 857.2	28	2 1/8 54.0	40 1/4 1022.3	11/16 17.46	559 526
32	47 1193.8	32 1/4 819.1	4 5/8 117.5	10 1/4 260.3	32 1/2 825.5	34 3/16 868.4	36 1/8 917.6	36 914.4	28	2 3/8 60.3	42 1/2 1079.5	11/16 17.46	680 605
34	49 1244.6	34 1/4 869.9	4 3/4 120.6	10 5/8 269.9	34 9/16 877.9	36 5/16 922.3	38 5/16 973.1	38 965.2	28	2 3/8 60.3	44 1/2 1130.3	3/4 19.05	717 652
36	51 3/4 1314.4	36 1/4 920.7	4 7/8 123.8	11 1/8 282.6	36 9/16 928.7	38 7/16 976.3	40 5/8 1031.9	40 1/4 1022.3	28	2 5/8 66.7	47 1193.8	3/4 19.05	780 744

Notes
- For weld neck flanges, dimension B is to be specified by the purchaser. It corresponds to the pipe inside diameter.
- For slip on flanges, the hub may be cylindrical or have a draft of ≤ 7° on the outside surface.
- WNF = Weld Neck Flange.
- Weights are based on manufacturer's data and are approximate.
- For ring joint facings see page 8-55.
- For tolerances see page 8-55.

BS 4504 Circular Flanges - General

Dimensions and Tolerances

Dimension		Range	Tolerance mm
Flange Facings (see page 8-63)	Eccentricity of machined facing diameters	≤ DN 100	1.0
		> DN 100	2.0
	a (type B facing height)	2 mm	+0, -1.0
		3 mm	+0, -2.0
		4 mm	+0, -3.0
		5 mm	+0, -4.0
		6 mm	+0, -5.0
	b (type C and E facing height)	All	+0.5, -0
	b (type G facing height)	All	+0, -0.5
	b (type H facing height, outer)	All	+0.2, -0
	c (type D and F facing height)	All	+0, -0.5
	d (type H facing height, inner)	All	+0.5, -0
	B and E (facing diameters)	All	+0, -0.5
	C and D (facing diameters)	All	+0.5, -0
Surface Finish	Facing types A, B, E and F	All, turning	Ra = 3.2 µm min 12.5 µm max
		All, other than turning	Ra = 3.2 µm min 6.3 µm max
	Facing types C, D, G and H	All	Ra = 0.8 µm min 3.2 µm max
Flange Drilling Details (see page 8-64)	B (diameter of bolt circle)	Bolt sizes M10 to M24	±0.9
		Bolt sizes M27 to M45	±1.4
	Centre to centre of adjacent bolt holes	Bolt sizes M10 to M24	±0.45
		Bolt sizes M27 to M45	±0.7
All	A (outside diameter)	≤ DN 150	±2.0
		> DN 150 ≤ DN 500	±3.0
		> DN 500 ≤ DN 1200	±5.0
		> DN 1200 ≤ DN 1800	±7.0
		> DN 1800	±10.0
	C (flange thickness, machined on both faces)	≤ 18 mm thickness	±1.0
		> 18 mm < 50 mm thickness	±1.0
		> 50 mm thickness	±1.0
	C (flange thickness, machined on front face)	≤ 18 mm thickness	+2.0, -1.0
		> 18 mm < 50 mm thickness	+4.0, -1.5
		> 50 mm thickness	+7.0, -2.0
Weld Neck Flanges, Code 111 (see page 8-66)	B (outside diameter of hub at welding end)	≤ DN 125	+3.0, -0
		> DN 125 ≤ DN 1200	+4.5, -0
		> DN 1200	+6.0, -0
	F (hub diameter)	≤ DN 50	+0, -2.0
		> DN 50 ≤ DN 150	+0, -4.0
		> DN 150 ≤ DN 300	+0, -6.0
		> DN 300 ≤ DN 600	+0, -8.0
		> DN 600 ≤ DN 1200	+0, -10.0
	D (length through hub)	≤ DN 80	±1.5
		> DN 80 ≤ DN 250	±2.0
		> DN 250	±3.0
Slip on, Code 112 (see page 8-68) and Threaded, Code 113 (see page 8-69) Flanges	E (slip on flange hub diameter) B (threaded flange hub diameter)	≤ DN 50	+1.0, -0
		> DN 50 ≤ DN 150	+2.0, -0
		> DN 150 ≤ DN 300	+4.0, -.0
		> DN 300 ≤ DN 600	+8.0, -0
		> DN 600 ≤ DN 1200	+12.0, -0
		> DN 1200 ≤ DN 1800	+16.0, -0
		> DN 1800	+20.0, -0
	B (slip on bore diameter)	≤ DN 100	+0.5, -0
		> DN 100 ≤ DN 400	+1.0, .0
		> DN 400 ≤ DN 600	+1.5, .0
		> DN 600	+3.0, -0
	D (length through hub)	Same as Weld Neck D	
Blank Flanges, Code 105 (see page 8-70)			

BS 4504 Circular Flanges - General

Weld Neck Flange - Welding Ends

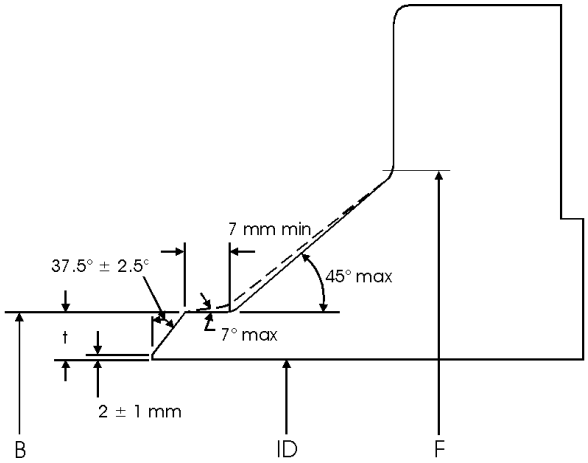

Welding end for Wall Thickness (t) from 5 mm to 22.2 mm

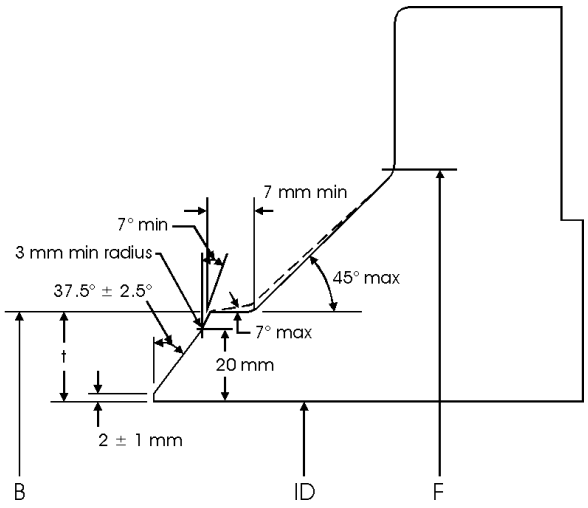

Welding end for Wall Thickness (t) > 22.2 mm

Flange Facings - BS 4504

BS 4504 flange facing types A to H are defined below. The dimensions vary with pipe size (DN) and pressure rating (PN) as detailed in the following table.

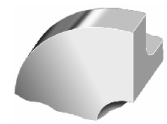

Type A
Flat face

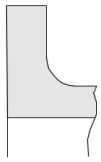

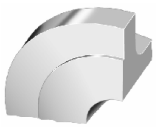

Type B
Raised face

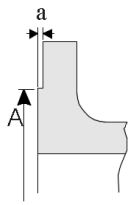

Type C
Tongue face

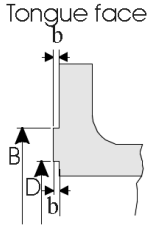

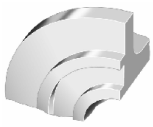

Type D
Groove face

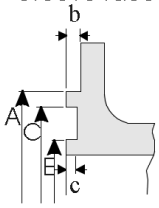

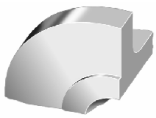

Type E
Spigot

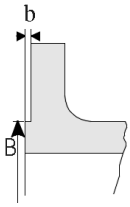

Type F
Recess

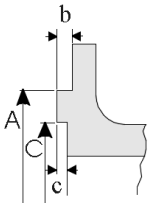

Type G
'O' Ring recess

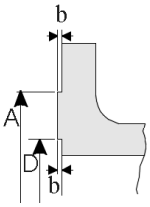

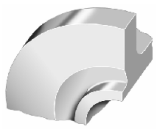

Type H
'O' Ring groove

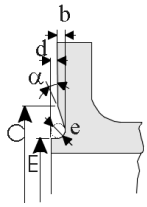

BS 4504 Circular Flanges - General

Flange facing dimensions (BS 4504)

DN	A mm						Face Dimensions									
	PN 2.5	PN 6	PN 10	PN 16	PN 25	PN 40	B mm	C mm	D mm	E mm	a mm	b mm	c mm	d mm	α mm	e mm
10	35	35	40	40	40	40	34	35	24	23	2	4	3	2	-	5
15	40	40	45	45	45	45	39	40	29	28	2	4	3	2	-	5
20	50	50	58	58	58	58	50	51	36	35	2	4	3	2	41°16'	5
25	60	60	68	68	68	68	57	58	43	42	2	4	3	2	41°16'	5
32	70	70	78	78	78	78	65	66	51	50	2	4	3	2	41°16'	5
40	80	80	88	88	88	88	75	76	61	60	3	4	3	2	41°16'	5
50	90	90	102	102	102	102	87	88	73	72	3	4	3	2	41°16'	5
65	110	110	122	122	122	122	109	110	95	94	3	4	3	2	41°16'	5
80	128	128	138	138	138	138	120	121	106	105	3	4	3	2	41°16'	5
100	148	148	158	158	162	162	149	150	129	128	3	4.5	3.5	2.5	32°15'	6
125	178	178	188	188	188	188	175	176	155	154	3	4.5	3.5	2.5	32°15'	6
150	202	202	212	212	218	218	203	204	183	182	3	4.5	3.5	2.5	32°15'	6
200	258	258	268	268	278	285	259	260	239	238	3	4.5	3.5	2.5	32°15'	6
250	312	312	320	320	335	345	312	313	292	291	3	4.5	3.5	2.5	32°15'	6
300	365	365	370	378	395	410	363	364	343	342	4	4.5	3.5	2.5	32°15'	6
350	415	415	430	438	450	465	421	422	395	394	4	5	4	3	27°24'	7
400	465	465	482	490	505	535	473	474	447	446	4	5	4	3	27°24'	7
450	520	520	532	550	555	560	523	524	497	496	4	5	4	3	27°24'	7
500	570	570	585	610	615	615	575	576	549	548	4	5	4	3	27°24'	7
600	670	670	685	725	720	735	675	676	649	648	5	5	4	3	27°24'	7
700	775	775	800	795	820	-	777	778	751	750	5	5	4	3	27°24'	7
800	880	880	905	900	930	-	882	883	856	855	5	5	4	3	27°24'	7
900	980	980	1005	1000	1030	-	987	988	961	960	5	5	4	3	27°24'	7
1000	1080	1080	1110	1115	1140	-	1092	1094	1062	1060	5	6	5	4	28°39'	8
1200	1280	1295	1330	1330	1350	-	1292	1294	1262	1260	5	6	5	4	28°39'	8
1400	1480	1510	1535	1530	1560	-	1492	1494	1462	1460	5	6	5	4	28°39'	8
1600	1690	1710	1760	1750	1780	-	1692	1694	1662	1660	5	6	5	4	28°39'	8
1800	1890	1920	1960	1950	1985	-	1982	1894	1862	1860	5	6	5	4	28°39'	8
2000	2090	2125	2170	2150	2210	-	2092	2094	2062	2060	5	6	5	4	28°39'	8

Manufacture

❍ **Materials.** Flange codes 111 112 and 113 are manufactured from a forging or steel casting. Stainless steel forgings conforming to ASTM A 182, have an additional requirement for grade F304L and F316L that carbon content (by ladle analysis) shall be 0.030% max.
Forgings to BS 1503 and comparable ASTM standard grades specified in BS 4504 are as listed in the following table.

BS and ASTM forging grades in BS 4504

BS 1503 Grade	ASTM A 182 Grade
304S11	F304L
304S31	F304
304S51	F304H
347S31	F347
347S51	F347H
321S31	F321
321S51	F321H
316S11	F316L
316S31	F316
316S51	F316H
310S31	F310

Flange Drilling Details - BS 4504

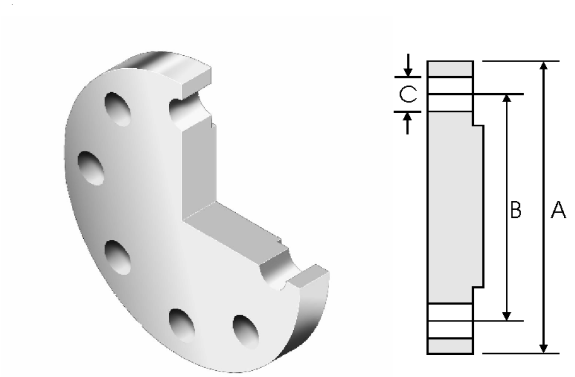

DN	PN	A	B	C	Bolt Holes	
		mm	mm	mm	No.	Bolt size
10	2.5 & 6	75	50	11	4	M10
	10,16,	90	60	14	4	M12
15	2.5 & 6	80	55	11	4	M10
	10 & 16	95	65	14	4	M12
	25 & 40	95	65	14	4	M12
20	2.5 & 6	90	65	11	4	M10
	10 & 16	105	75	14	4	M12
	25 &40	105	75	14	4	M12
25	2.5 & 6	100	75	11	4	M10
	10 & 16	115	85	14	4	M12
	25&40	115	85	14	4	M12
32	2.5 & 6	120	90	14	4	M12
	10 & 16	140	100	18	4	M16
	25 & 40	140	100	18	4	M16
40	2.5 & 6	130	100	14	4	M12
	10 & 16	150	110	18	4	M16
	25 &40	150	110	18	4	M16
50	2.5 & 6	140	110	14	4	M12
	10 & 16	165	125	18	4	M16
	25 &40	165	125	18	4	M16
65	2.5 & 6	160	130	14	4	M12
	10 & 16	185	145	18	4/8	M16
	25 & 40	185	145	18	8	M16
80	2.5 & 6	190	150	18	4	M16
	10 & 16	200	160	18	8	M16
	25 &40	200	160	18	8	M16
100	2.5 & 6	210	170	18	4	M16
	10 & 16	220	180	18	8	M16
	25 &40	235	190	22	8	M20
125	2.5 & 6	240	200	18	8	M16
	10 & 16	250	210	18	8	M16
	25 & 40	270	220	26	8	M24
150	2.5 & 6	265	225	18	8	M16
	10 & 16	285	240	22	8	M20
	25 & 40	300	250	26	8	M24
200	2.5 & 6	320	280	18	8	M16
	10 & 16	340	295	22	8/12	M20
	25	360	310	26	12	M24
	40	375	320	30	12	M27
250	2.5 & 6	375	335	18	12	M16
	10	395	350	22	12	M20
	16	405	355	26	12	M24
	25	425	370	30	12	M27
	40	450	385	33	12	M30
300	2.5 & 6	440	395	22	12	M20
	10	445	400	22	12	M20
	16	460	410	26	12	M24
	25	485	430	30	16	M27
	40	515	450	33	16	M30

DN	PN	A	B	C	Bolt Holes	
		mm	mm	mm	No.	Bolt size
350	2.5 & 6	490	445	22	12	M20
	10	505	460	22	16	M20
	16	520	470	26	16	M24
	25	555	490	33	16	M30
	40	580	510	36	16	M33
400	2.5 & 6	540	495	22	16	M20
	10	565	515	26	16	M24
	16	580	525	30	16	M27
	25	620	550	36	16	M33
	40	660	585	39	16	M36
450	2.5 & 6	595	550	22	16	M20
	10	615	565	26	20	M24
	16	640	585	30	20	M27
	25	670	600	36	20	M33
	40	685	610	39	20	M36
500	2.5 & 6	645	610	22	20	M20
	10	670	620	26	20	M24
	16	715	650	33	20	M30
	25	730	660	36	20	M33
	40	755	670	42	20	M39
600	2.5 & 6	755	705	26	20	M24
	10	780	725	30	20	M27
	16	840	770	36	20	M33
	25	845	770	39	20	M36
	40	890	795	48	20	M45
700	2.5 & 6	860	810	26	24	M24
	10	895	840	30	24	M27
	16	910	840	36	24	M33
	25	960	875	42	24	M39
800	2.5 & 6	975	920	30	24	M27
	10	1015	950	33	24	M30
	16	1025	950	39	24	M36
	25	1085	990	48	24	M45
900	2.5 & 6	1075	1020	30	24	M27
	10	1115	1050	33	28	M30
	16	1125	1050	39	28	M36
	25	1185	1090	48	28	M45
1000	2.5 & 6	1175	1120	30	28	M27
	10	1230	1160	36	28	M33
	16	1255	1170	42	28	M39
	25	1320	1210	56	28	M52
1200	2.5	1375	1320	30	32	M27
	6	1405	1340	33	32	M30
	10	1455	1380	39	32	M36
	16	1485	1390	48	32	M45
	25	1530	1420	56	32	M52
1400	2.5	1575	1520	30	36	M27
	6	1630	1560	36	36	M33
	10	1675	1590	42	36	M39
	16	1685	1590	48	36	M45
	25	1755	1640	62	36	M56
1600	2.5	1790	1730	30	40	M27
	6	1830	1760	36	40	M33
	10	1915	1820	48	40	M45
	16	1930	1820	56	40	M52
	25	1975	1860	62	40	M56
1800	2.5	1990	1930	30	44	M27
	6	2045	1970	39	44	M36
	10	2115	2020	48	44	M45
	16	2130	2020	56	44	M52
	25	2185	2070	70	44	M64
2000	2.5	2190	2130	30	48	M27
	6	2265	2180	42	48	M39
	10	2325	2230	48	48	M45
	16	2345	2230	62	48	M56
	25	2425	2300	70	48	M64

Plate Flanges (Code 101) - BS 4504

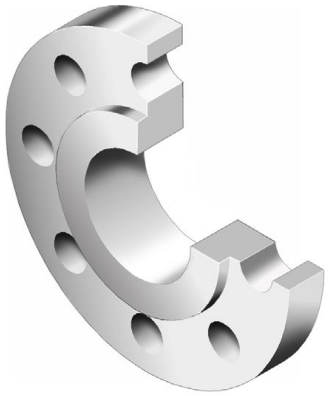

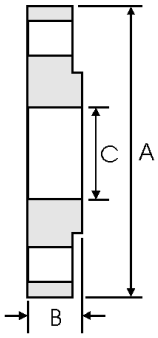

DN	PN	A mm	B mm	C mm
10	2.5, 6	75	12	18.0
	10 &16	90	14	
	25 & 40	90	14	
15	2.5 & 6	80	12	22
	10 &16	95	14	
	25 & 40	95	14	
20	2.5 & 6	90	14	27.5
	10 &16	105	16	
	25 & 40	105	16	
25	2.5 & 6	100	14	34.5
	10 &16	115	16	
	25 & 40	115	16	
32	2.5 & 6	120	16	43.5
	10 &16	140	18	
	25 & 40	140	18	
40	2.5 & 6	130	16	49.5
	10 &16	150	18	
	25 & 40	150	18	
50	2.5 & 6	140	16	61.5
	10 & 16	165	20	
	25 & 40	165	20	
65	2.5 & 6	160	16	77.5
	10 & 16	185	20	
	25 & 40	185	22	
80	2.5 & 6	190	18	90.5
	10 &16	200	20	
	25 & 40	200	24	
100	2.5 & 6	210	18	116.0
	10 &16	220	22	
	25 & 40	235	26	
125	2.5 & 6	240	20	141.5
	10 & 16	250	22	
	25 & 40	270	28	
150	2.5 & 6	265	20	170.5
	10 & 16	285	24	
	25 & 40	300	30	
200	2.5 & 6	320	22	221.5
	10 &16	340	24	
	25	360	32	
	40	375	36	
250	2.5 & 6	375	24	276.5
	10	395	26	
	16	405	29	
	25	425	35	
	40	450	42	

DN	PN	A mm	B mm	C mm
300	2.5 & 6	440	24	327.5
	10	445	26	
	16	460	32	
	25	485	38	
	40	515	48	
350	2.5 & 6	490	26	359.5
	10	505	28	
	16	520	35	359.0
	25	555	42	359.5
	40	580	54	
400	2.5 & 6	540	28	411.0
	10	565	32	
	16	580	38	
	25	620	46	
	40	660	60	
450	2.5 & 6	595	30	462.0
	10	615	36	
	16	640	42	
	25	670	50	
	40	685	66	
500	2.5 & 6	645	30	513.5
	10	670	38	
	16	715	46	
	25	730	56	
	40	755	72	
600	2.5 & 6	755	32	616.5
	10	780	42	
	16	840	52	
	25	845	68	
	40	890	84	
700	2.5	860	36	To be specified by purchaser
800	2.5	975	38	
900	2.5	1075	40	
1000	2.5	1175	42	
1200	2.5	1375	44	
1400	2.5	1575	48	
1600	2.5	1790	51	
1800	2.5	1990	54	
2000	2.5	2190	58	

Notes
- Dimension B is the flange thickness with or without a raised face.
- For drilling details see page 8-64.
- For tolerances see page 8-61.
- For facing types and dimensions see page 8-62.

Weld Neck Flanges (Code 111) - BS 4504

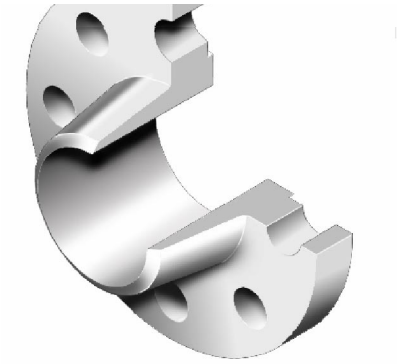

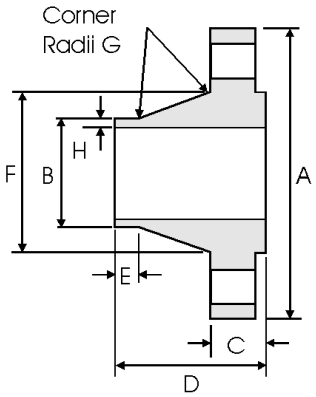

DN	PN	A mm	B mm	C mm	D mm	E mm	F mm	G mm	H mm
10	2.5,6	75	17.2	12	28	6	26	3	1.8
	10	90		14	35		28		1.8
	16	90		14	35		28		1.8
	25	90		16	35		28		1.8
	40	90		16	35		28		1.8
15	2.5,6	80	21.3	12	30	6	30	3	2
	10	95		14	35		32		2
	16	95		14	35		32		2
	25	95		16	38		32		2
	40	95		16	38		32		2
20	2.5,6	90	26.9	14	32	6	38	4	2.3
	10	105		16	38		39		2.3
	16	105		16	38		39		2.3
	25	105		18	40		40		2.3
	40	105		18	40		40		2.3
25	2.5,6	100	33.7	14	35	6	42	4	2.6
	10	115		16	38		46		2.6
	16	115		16	38		46		2.6
	25	115		18	40		46		2.6
	40	115		18	40		46		2.6
32	2.5,6	120	42.4	14	35	6	55	5	2.6
	10	140		16	40		56		2.6
	16	140		16	40		56		2.6
	25	140		18	42		56		2.6
	40	140		18	42		56		2.6
40	2.5,6	130	48.3	14	38	7	62	5	2.6
	10	150		16	42		64		2.6
	16	150		16	42		64		2.6
	25	150		18	45		64		2.6
	40	150		18	45		64		2.6
50	2.5,6	140	60.3	14	38	8	74	5	2.9
	10	165		18	45		74		2.9
	16	165		18	45		74		2.9
	25	165		20	48		74		2.9
	40	165		20	48		74		2.9
65	2.5,6	160	76.1	14	38	9	88	6	2.9
	10	185		18	45	10	92		2.9
	16	185		18	45		92		2.9
	25	185		22	52		92		2.9
	40	185		22	52		92		2.9
80	2.5,6	190	88.9	16	42	10	102	6	3.2
	10	200		20	50		110		3.2
	16	200		20	50		110		3.2
	25	200		24	58	12	110		3.2
	40	200		24	58		110		3.2

DN	PN	A mm	B mm	C mm	D mm	E mm	F mm	G mm	H mm
100	2.5,6	210	114.3	16	45	10	130	6	3.6
	10	220		20	52	12	130		3.6
	16	220		20	52		130		3.6
	25	235		24	65		134		3.6
	40	235		24	65		134		3.6
125	2.5,6	240	139.7	18	48	10	155	6	4
	10	250		22	55	12	158		4
	16	250		22	55		158		4
	25	270		26	68		162		4
	40	270		26	68		162		4
150	2.5,6	265	168.3	18	48	12	184	8	4.5
	10	285		22	55		184		4.5
	16	285		22	55		184		4.5
	25	300		28	75		190		4.5
	40	300		28	75		190		4.5
200	2.5,6	320	219.1	20	55	15	236	8	5.6
	10	340		24	62	16	234		5.6
	16	340		24	62		234		5.6
	25	360		30	80		244		6.3
	40	375		34	88		244		6.3
250	2.5,6	375	273	22	60	15	290	10	6.3
	10	395		26	68	16	288		6.3
	16	405		26	70		288		6.3
	25	425		32	88	18	296		7.1
	40	450		38	105		306		7.1
300	2.5,6	440	323.9	22	62	15	342	10	7.1
	10	445		26	68	16	342		7.1
	16	460		28	78		342		7.1
	25	485		34	92	18	350		8
	40	515		42	115		362		8
350	2.5,6	490	355.6	22	62	15	385	10	7.1
	10	505		26	68	16	390		7.1
	16	520		30	82		390		8
	25	555		38	100	20	398		8
	40	580		46	125		408		8.8
400	2.5,6	540	406.4	22	65	15	438	10	7.1
	10	565		26	72	16	440		7.1
	16	580		32	85		444		8
	25	620		40	110	20	452		8.8
	40	660		50	135		462		11
450	2.5,6	595	457	24	65	15	492	12	7.1
	10	615		28	72				

Weld Neck Flanges (Code 111) - BS 4504

DN	PN	A mm	B mm	C mm	D mm	E mm	F mm	G mm	H mm
500	2.5,6	645	508	24	68	15	538	12	7.1
	10	670		28	75	16	540		7.1
	16	715		34	90		546		8
	25	730		44	125	20	558		10
	40	755		52	140		562		14.2
600	2.5,6	755	610	24	70	16	640	12	7.1
	10	780		28	80	18	640		7.1
	16	840		36	95		650		8.8
	25	845		46	125	20	660		11
	40	890		60	150		666		16
700	2.5	860	711	24	70	16	740	12	-[1]
	6	860		24	70		740		7.1
	10	895		30	80	18	746		8
	16	910		36	100		750		8.8
	25	960		46	125	20	760		12.5
800	2.5	975	813	26	70	16	842	12	-[1]
	6	975		24	70		842		7.1
	10	1015		32	90	18	848		8
	16	1025		38	105	20	848		10
	25	1085		50	135	22	864		14.2
900	2.5	1075	914	26	70	16	942	12	-[1]
	6	1075		26	70		942		7.1
	10	1115		34	95	20	948		10
	16	1125		40	110		948		10
	25	1185		54	145	24	968		16
1000	2.5	1175	1016	26	70	16	1045	12	-[1]
	6	1175		26	70		1045		7.1
	10	1230		34	95	20	1050		10
	16	1255		42	120	22	1056		10
	25	1320		58	155	24	1070		17.5
1200	2.5	1375	1220	26	70	16	1245	16	-[1]
	6	1405		28	90	20	1248	12	8
	10	1455		38	115	25	1256		11
	16	1485		48	130	30	1260		12.5
1400	2.5	1575	1420	26	70	16	1445	16	-[1]
	6	1630		32	90	20	1452	12	8
	10	1675		42	120	25	1460		12
	16	1685		52	145	30	1465		14.2
1600	2.5	1790	1620	26	80	20	1645	16	-[1]
	6	1830		34	90		1655	12	9
	10	1915		46	130	25	1666		14
	16	1930		58	160	35	1668		16
1800	2.5	1990	1820	26	80	20	1845	16	-[1]
	6	2045		36	100		1855	15	10
	10	2115		50	140	30	1866		15
	16	2130		62	170	35	1870		17.5
2000	2.5	2190	2020	26	80	22	2045	16	-[1]
	6	2265		38	110	25	2058	15	11
	10	2325		54	150	30	2070		16
	16	2345		66	190	40	2072		20

Notes
- For drilling details see page 8-64.
- For tolerances see page 8-61.
- For facing types and dimensions see page 8-62.

1 To be specified by the purchaser.

Slip On Flanges (Code 112) - BS 4504

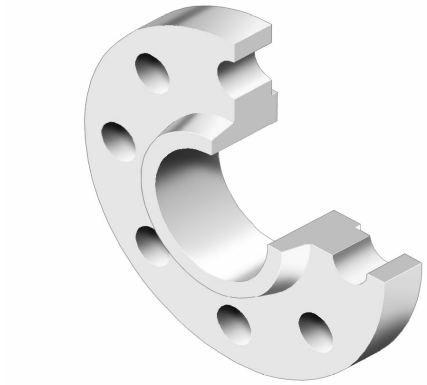

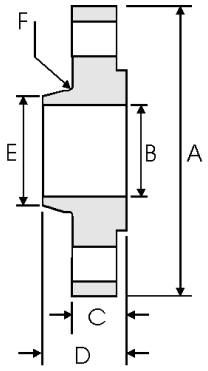

DN	PN	A mm	B mm	C mm	D mm	E mm	F mm
		75		12	20	25	
	10 &16	90	18.0	14	20	30	3
10	25 & 40	90		16	22	30	
		80		12	20	30	
	10 &16	95	22	14	20	35	3
15	25 & 40	95		16	22	35	
		90		14	24	40	
	10 &16	105	27.5	16	24	45	4
20	25 & 40	105		18	26	45	
		100		14	24	50	
	10 &16	115	34.5	16	24	52	4
25	25 & 40	115		18	28	52	
		120		14	26	60	
	10 &16	140	43.5	16	26	60	5
32	25 & 40	140		18	30	60	
		130		14	26	70	
	10 &16	150	49.5	16	26	70	5
40	25 & 40	150		18	32	70	
		140		14	28	80	
	10 & 16	165	61.5	18	28	84	5
50	25 & 40	165		20	34	84	
		160		14	32	100	
	10 & 16	185	77.5	18	32	104	6
65	25 & 40	185		22	38	104	
		190		16	34	110	
	10 &16	200	90.5	20	34	118	6
80	25&40	200		24	40	118	
		210		16	40	130	
	10 &16	220	116.0	20	40	140	6
100	25&40	235		24	44	145	
		240		18	44	160	
	10 & 16	250	141.5	22	44	168	6
125	25 & 40	270		26	48	170	
		265		18	44	185	
	10 & 16	285	170.5	22	44	195	8
150	25 & 40	300		28	75	190	

DN	PN	A mm	B mm	C mm	D mm	E mm	F mm
	6	320		20	44	240	
200	10 &16	340	221.5	24	44	246	8
	25	360		30	52	256	
	40	375		34	52	260	
	6	375		22	44	295	
	10	395		26	46	298	
250	16	405	276.5	26	46	298	10
	25	425		32	60	310	
	40	450		38	60	312	
	6	440		22	44	355	
	10	445		26	46	350	
300	16	460	327.5	28	46	350	10
	25	485		34	67	364	
	40	515		42	67	380	
	10	505	359.5	26	53	400	
350	16	520	359.0	30	57	400	10
	25	555	359.5	38	72	418	
	40	580		46	72	424	
	10	565		26	57	456	
400	16	580	411.0	32	63	456	10
	25	620		40	78	472	
	40	660		50	78	478	
	10	615		28	63	502	
450	16	640	462.0	34	68	502	12
	25	670		42	84	520	
	40	685		50	84	522	
	10	670		28	67	559	
500	16	715	513.5	34	73	559	12
	25	730		44	90	580	
	40	755		52	90	576	
	10	780		28	75	658	
600	16	840	616.5	36	83	658	12
	25	845		46	100	684	
	40	890		60	100	686	
-	-	-	-	-	-	-	-
-	-	-	-	-	-	-	-

Notes The hubs of slip on (code 112) flanges are parallel or have a draft <7 degrees.
- For drilling details see page 8-64.
- For tolerances see page 8-61.
- For facing types and dimensions see page 8-62.

Threaded Flanges (Code 113) - BS 4504

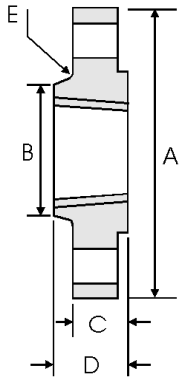

DN	PN	A mm	B mm	C mm	D mm	E mm
10	6	75	25	12	20	3
	16	90	30	14	20	
	40	90	30	16	22	
15	6	80	30	12	20	3
	16	95	35	14	20	
	40	95	35	16	22	
20	6	90	40	14	24	4
	16	105	45	16	24	
	40	105	45	18	26	
25	6	100	50	14	24	4
	16	115	52	16	24	
	40	115	52	18	28	
32	6	120	60	14	26	5
	16	140	60	16	26	
	40	140	60	18	30	
40	6	130	70	14	26	5
	16	150	70	16	26	
	40	150	70	18	32	
50	6	140	80	14	28	5
	16	165	84	18	28	
	40	165	84	20	34	
65	6	160	100	14	32	6
	16	185	104	18	32	
	40	185	104	22	38	
80	6	190	110	16	34	6
	16	200	118	20	34	
	40	200	118	24	40	
100	6	210	130	16	40	6
	16	220	140	20	40	
	40	235	145	24	44	

DN	PN	A mm	B mm	C mm	D mm	E mm
125	6	240	160	18	44	6
	16	250	168	22	44	
	40	270	170	26	48	
150	6	265	185	18	44	8
	16	285	195	22	44	
	40	300	200	28	52	
200	6	320	240	20	44	8
	16	340	246	24	44	
	40	375	260	34	52	
250	6	375	295	22	44	10
	16	405	298	26	46	
	40	450	312	38	60	
300	6	440	355	22	44	10
	16	460	350	28	46	
	40	515	380	42	67	
350	16	520	400	30	57	10
	40	580	424	46	72	
400	16	580	456	32	63	10
	40	660	478	50	78	
450	16	640	502	34	68	12
	40	685	522	50	84	
500	16	715	559	34	73	12
	40	755	576	52	90	
600	16	840	658	36	83	12
	40	890	686	60	100	
700	16	910	760	36	83	12
800	16	1025	864	38	90	12
900	16	1125	968	40	94	12
1000	16	1255	1072	42	100	12
-	-	-	-	-	-	-

Notes
- Threaded flange (code 113) threads are tapered or parallel.
  BS 21 or ANSI/ASME B1.20.1 threads may be specified (see Section 10).
- The hubs of threaded (code 113) flanges are parallel or have a draft <7 degrees.
- For drilling details see page 8-64.
- For tolerances see page 8-61.
- For facing types and dimensions see page 8-62.

Blank Flanges (Code 105) - BS 4504

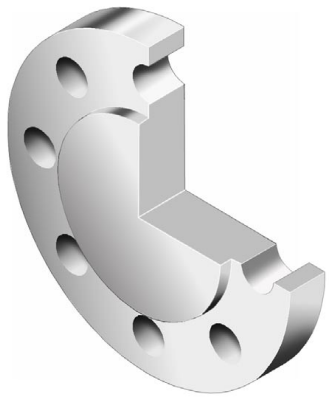

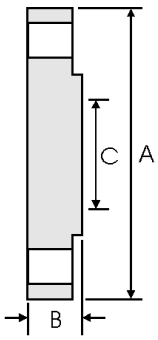

DN	PN	A mm	B mm	C mm
10	2.5, 6	75	12	-
	10 &16	90	14	-
	25 & 40	90	16	-
15	2.5 & 6	80	12	-
	10 &16	95	14	-
	25 & 40	95	16	-
20	2.5 & 6	90	14	-
	10 &16	105	16	-
	25 & 40	105	18	-
25	2.5 & 6	100	14	-
	10 &16	115	16	-
	25 & 40	115	18	-
32	2.5 & 6	120	14	-
	10 &16	140	16	-
	25 & 40	140	18	-
40	2.5 & 6	130	14	-
	10 &16	150	16	-
	25 & 40	150	18	-
50	2.5 & 6	140	14	-
	10 & 16	165	18	-
	25 & 40	165	20	-
65	2.5 & 6	160	14	55
	10 & 16	185	18	55
	25 & 40	185	22	55
80	2.5 & 6	190	16	70
	10 &16	200	20	70
	25&40	200	24	70
100	2.5 & 6	210	16	90
	10 &16	220	20	90
	25&40	235	24	90
125	2.5 & 6	240	18	115
	10 & 16	250	22	115
	25 & 40	270	26	115
150	2.5 & 6	265	18	140
	10 & 16	285	22	140
	25 & 40	300	28	140
200	2.5 & 6	320	20	190
	10 &16	340	24	190
	25	360	30	190
	40	375	34	190
250	2.5 & 6	375	22	235
	10	395	26	235
	16	405	26	235
	25	425	32	235
	40	450	38	235

DN	PN	A mm	B mm	C mm
300	2.5 & 6	440	22	285
	10	445	26	285
	16	460	28	285
	25	485	34	285
	40	515	42	285
350	2.5 & 6	490	22	325
	10	505	26	325
	16	520	30	325
	25	555	38	325
	40	580	46	325
400	2.5 & 6	540	22	375
	10	565	26	375
	16	580	32	375
	25	620	40	375
	40	660	50	375
450	2.5 & 6	595	24	425
	10	615	28	425
	16	640	34	425
	25	670	42	425
	40	685	54	425
500	2.5 & 6	645	24	475
	10	670	28	475
	16	715	36	475
	25	730	45	475
	40	755	56	475
600	2.5 & 6	755	34	575
	10	780	34	575
	16	840	44	575
	25	845	54	575
	40	890	70	575
700	2.5	860	36	-
	6	860	38	-
	10	895	38	670
	16	910	48	670
800	2.5	975	38	-
	6	975	42	-
	10	1015	42	770
	16	1025	52	770
900	2.5	1075	40	-
	6	1075	46	-
	10	1115	46	860
	16	1125	58	860
1000	2.5	1175	42	-
	6	1175	52	-
	10	1230	52	960
	16	1255	64	960
1200	2.5	1375	44	-
	6	1405	60	-
	10	1455	60	1160
	16	1485	76	1160
1400	2.5	1575	48	-
	6	1630	68	-
1600	2.5	1790	51	-
	6	1830	76	-
1800	2.5	1990	54	-
	6	2045	84	-
2000	2.5	2190	58	-
	6	2265	92	-

Notes

- Dimension B is the range thickness with or without a raised face.
- Dimension C is the maximum diameter of the centre portion of a blank flange face which need not be machined.
- For drilling details see page 8-64.
- For tolerances see page 8-61.
- For facing types and dimensions see page 8-62.

BS 10 : 1962

British Standard BS 10 : 1962 - Specification for Flanges and Bolting for Pipes, Valves, and Fittings. This covers plain, boss, integrally cast or forged, and welding neck type flanges, in ten tables. Although BS 10 is obsolescent, it remains in use for the dimensions of light duty, economy stainless steel flanges in applications where corrosion resistance and/or hygiene, rather than high pressures and temperatures, are the primary considerations. The following tables detail the applicable standard dimensions from Tables D, E, F and H of BS 10.

Flange Dimensions Based on Tables D and E of BS 10 : 1962

	Overall Diameter of Flange	Flange Thickness	Bolt Circle Diameter	Number of Bolts	Diameter of Bolts	Overall Diameter of Flange	Flange Thickness	Bolt Circle Diameter	Number of Bolts	Diameter of Bolts
in	in	in	in		in	in	in	in		in
1/2	3 3/4	3/16	2 5/8	4	1/2	3 3/4	1/4	2 5/8	4	1/2
3/4	4	3/16	2 7/8	4	1/2	4	1/4	2 7/8	4	1/2
1	4 1/2	3/16	3 1/4	4	1/2	4 1/2	9/32	3 1/4	4	1/2
1 1/4	4 3/4	1/4	3 7/16	4	1/2	4 3/4	5/16	3 7/16	4	1/2
1 1/2	5 1/4	1/4	3 7/8	4	1/2	5 1/4	11/32	3 7/8	4	1/2
2	6	5/16	4 1/2	4	5/8	6	3/8	4 1/2	4	5/8
2 1/2	6 1/2	5/16	5	4	5/8	6 1/2	13/32	5	4	5/8
3	7 1/4	3/8	5 3/4	4	5/8	7 1/4	7/16	5 3/4	4	5/8
3 1/2	8	3/8	6 1/2	4	5/8	8	15/32	6 1/2	8	5/8
4	8 1/2	3/8	7	4	5/8	8 1/2	1/2	7	8	5/8
5	10	1/2	8 1/4	8	5/8	10	9/16	8 1/4	8	5/8
6	11	1/2	9 1/4	8	5/8	11	11/16	9 1/4	8	3/4
7	12	1/2	10 1/4	8	5/8	12	3/4	10 1/4	8	3/4
8	13 1/4	1/2	11 1/2	8	5/8	13 1/4	3/4	11 1/2	8	3/4
9	14 1/2	5/8	12 3/4	8	5/8	14 1/2	1 3/16	12 3/4	12	3/4
10	16	5/8	14	8	3/4	16	7/8	14	12	3/4
12	18	3/4	16	12	3/4	18	1	16	12	7/8
13	19 1/4	3/4	17 1/4	12	3/4	19 1/4	1	17 1/4	12	7/8
14	20 3/4	7/8	18 1/2	12	7/8	20 3/4	1 1/8	18 1/2	12	7/8
15	21 3/4	7/8	19 1/2	12	7/8	21 3/4	1 1/4	19 1/2	12	7/8
16	22 3/4	7/8	20 1/2	12	7/8	22 3/4	1 1/4	20 1/2	12	7/8
17	24	1	21 3/4	12	7/8	24	1 3/8	21 3/4	12	7/8
18	25 1/4	1	23	12	7/8	25 1/4	1 3/8	23	16	7/8
19	26 1/2	1	24	12	7/8	26 1/2	1 1/2	24	16	7/8
20	27 3/4	1 1/8	25 1/4	16	7/8	27 3/4	1 1/2	25 1/4	16	7/8
21	29	1 1/8	26 1/2	16	7/8	29	1 5/8	26 1/2	16	1
22	30	1 1/8	27 1/2	16	1	30	1 3/4	27 1/2	16	1
23	31	1 1/8	28 1/2	16	1	31	1 3/4	28 1/2	16	1
24	32 1/2	1 1/4	29 3/4	16	1	32 1/2	1 7/8	29 3/4	16	1 1/8

Note

- Bolt hole diameters are as follows:
  For 1/2 in and 5/8 in bolts, the bolt hole shall be 1/16 in larger than the bolt diameter.
  For 3/4 in bolts and larger, the bolt hole shall be not more than 1/8 in larger than the bolt diameter.

BS 10 : 1962

Flange Dimensions Based on Tables F and H of BS 10 : 1962

	Overall Diameter of Flange	Flange Thickness	Bolt Circle Diameter	Number of Bolts	Diameter of Bolts	Overall Diameter of Flange	Flange Thickness	Bolt Circle Diameter	Number of Bolts	Diameter of Bolts
1/2	3 3/4	3/8	2 5/8	4	1/2	4 1/2	1/2	3 1/4	4	5/8
3/4	4	3/8	2 7/8	4	1/2	4 1/2	1/2	3 1/4	4	5/8
1	4 3/4	3/8	3 7/16	4	5/8	4 3/4	9/16	3 7/16	4	5/8
1 1/4	5 1/4	1/2	3 7/8	4	5/8	5 1/4	11/16	3 7/8	4	5/8
1 1/2	5 1/2	1/2	4 1/8	4	5/8	5 1/2	11/16	4 1/8	4	5/8
2	6 1/2	5/8	5	4	5/8	6 1/2	3/4	5	4	5/8
2 1/2	7 1/4	5/8	5 3/4	8	5/8	7 1/4	3/4	5 3/4	8	5/8
3	8	5/8	6 1/2	8	5/8	8	7/8	6 1/2	8	5/8
3 1/2	8 1/2	3/4	7	8	5/8	8 1/2	7/8	7	8	5/8
4	9	3/4	7 1/2	8	5/8	9	1	7 1/2	8	5/8
5	11	7/8	9 1/4	8	3/4	11	1 1/8	9 1/4	8	3/4
6	12	7/8	10 1/4	12	3/4	12	1 1/8	10 1/4	12	3/4
7	13 1/4	7/8	11 1/2	12	3/4	13 1/4	1 1/4	11 1/2	12	3/4
8	14 1/2	1	12 3/4	12	3/4	14 1/2	1 1/4	12 3/4	12	3/4
9	16	1 1/8	14	12	7/8	16	1 3/8	14	12	7/8
10	17	1 1/8	15	12	7/8	17	1 3/8	15	12	7/8
12	19 1/4	1 1/4	17 1/4	16	7/8	19 1/4	1 5/8	17 1/4	16	7/8
13	20 3/4	1 3/8	18 1/2	16	1	20 3/4	1 3/4	18 1/2	16	1
14	21 3/4	1 3/8	19 1/2	16	1	21 3/4	1 7/8	19 1/2	16	1
15	22 3/4	1 1/2	20 1/2	16	1	22 3/4	2	20 1/2	16	1
16	24	1 5/8	21 3/4	20	1	24	2 1/8	21 3/4	20	1
17	25 1/4	1 3/4	23	20	1	25 1/4	2 1/4	23	20	1
18	26 1/2	1 3/4	24	20	1 1/8	26 1/2	2 3/8	24	20	1 1/8
19	27 3/4	1 3/4	25 1/4	20	1 1/8	27 3/4	2 1/2	25 1/4	20	1 1/8
20	29	2	26 1/2	24	1 1/8	29	2 5/8	26 1/2	24	1 1/8
21	30	2	27 1/2	24	1 1/8	30	2 3/4	27 1/2	24	1 1/8
22	31	2 1/8	28 1/2	24	1 1/8	31	2 3/4	28 1/2	24	1 1/8
23	32 1/2	2 1/4	29 3/4	24	1 1/4	32 1/2	3	29 3/4	24	1 1/4
24	33 1/2	2 1/4	30 3/4	24	1 1/4	33 1/2	3	30 3/4	24	1 1/4

Note

- Bolt hole diameters are as follows:
  For 1/2 in and 5/8 in bolts, the bolt hole shall be 1/16 in larger than the bolt diameter.
  For 3/4 in bolts and larger, the bolt hole shall be not more than 1/8 in larger than the bolt diameter.

Pressure/Temperature Ratings

The following tables (based on ANSI B16.5-1996 and B16.47-1996) provide pressure/ temperature ratings for stainless steel materials used for flanges. Refer to Section 4 for further details regarding ASTM A 182. Also, the chemical analyses of ASTM A 240 grades are included in Section 1.

Materials: 304, 304H

Nominal Designation	Forgings	Plates
18Cr-8Ni	A 182 Gr. F304[1] A 182 Gr. F304H	A 240 Gr. 304[1] A 240 Gr. 304H

Note
1 At temperatures over 1000°F, use only when the carbon content is 0.04% or higher.

Pressure/temperature ratings

Temperature		Working Pressures by Classes, psig						
°F	°C	150 lb	300 lb	400 lb	600 lb	900 lb	1500 lb	2500 lb
-20 to 100	-29 to 37.8	275	720	960	1440	2160	3600	6000
300	149	205	540	720	1080	1620	2700	4500
500	260	170	465	620	930	1395	2330	3880
700	371	110	425	565	850	1275	2125	3540
850	454	65	395	530	790	1190	1980	3300
1000	538	20	320	430	640	965	1605	2675
1150	566	-	200	265	400	595	995	1655
1300	704	-	85	115	170	255	430	715
1400	760	-	50	65	95	145	240	400
1500	816	-	25	35	55	80	135	230

Note
- psig = pounds per square inch gauge (0 psig = 14.7 psi absolute)

Materials: 316, 316H, 317

Nominal Designation	Forgings	Plates
16Cr-12Ni-2Mo	A 182 Gr. F316[1]	A 182 Gr. F316H

Note
1 At temperatures over 1000°F, use only when the carbon content is 0.04% or higher.

Pressure/temperature ratings

Temperature		Working Pressures by Classes, psig						
°F	°C	150 lb	300 lb	400 lb	600 lb	900 lb	1500 lb	2500 lb
-20 to 100	-29 to 37.8	275	720	960	1440	2160	3600	6000
300	149	215	560	745	1120	1680	2795	4660
500	260	170	480	635	955	1435	2390	3980
700	371	110	430	580	870	1305	2170	3620
850	454	65	420	555	835	1255	2090	3480
1000	538	20	350	465	700	1050	1750	2915
1150	566	-	235	315	475	710	1185	1970
1300	704	-	115	155	235	350	585	970
1400	760	-	75	100	150	225	380	630
1500	816	-	40	55	85	125	205	345

Note
- psig = pounds per square inch gauge (0 psig = 14.7 psi absolute)

Pressure/Temperature Ratings

Materials: 316L, 304L

Nominal Designation	Forgings	Plates
16Cr-12Ni-2Mo 18Cr-8Ni	A 182 Gr. F316L A 182 Gr. F304L[1]	A 240 Gr. 316L A 240 Gr. 304L[1]

Note
1 Not to be used over 800°F.

Pressure/temperature ratings

Temperature		Working Pressures by Classes, psig						
°F	°C	150 lb	300 lb	400 lb	600 lb	900 lb	1500 lb	2500 lb
-20 to 100	-29 to 37.8	230	600	800	1200	1800	3000	5000
300	149	175	455	605	910	1360	2270	3780
500	260	145	380	510	765	1145	1910	3180
700	371	110	345	460	685	1030	1715	2860
850	454	65	320	430	645	965	1610	2680

Note
- psig = pounds per square inch gauge (0 psig = 14.7 psi absolute)

Materials: 321, 321H

Nominal Designation	Forgings	Plates
18Cr-10Ni-Ti	A 182 Gr. F321[2] A 182 Gr. F321H[1]	A 240 Gr. 321[2] A 240 Gr. 321H[1]

Notes
1 At temperatures over 1000°F, use only if the material is heat treated by heating to a minimum temperature of 2000°F.
2 Not to be used over 1000°F.

Pressure/temperature ratings

Temperature		Working Pressures by Classes, psig						
°F	°C	150 lb	300 lb	400 lb	600 lb	900 lb	1500 lb	2500 lb
-20 to 100	-29 to 37.8	275	720	960	1440	2160	3600	6000
300	149	230	595	795	1190	1785	2975	4960
500	260	170	515	685	1030	1545	2570	4285
700	371	110	465	620	930	1395	2330	3880
850	454	65	445	595	895	1340	2230	3720
1000	538	20	355	475	715	1070	1785	2970
1150	566	-	235	315	465	710	1185	1970
1300	704	-	110	145	220	330	550	915
1400	760	-	65	85	130	195	325	545
1500	816	-	40	50	75	115	190	315

Note
- psig = pounds per square inch gauge (0 psig = 14.7 psi absolute)

Pressure/Temperature Ratings

Materials: 347, 347H, 348, 348H

Nominal Designation	Forgings	Plates
18Cr-10Ni-Cb	A 182 Gr. F347[2] A 182 Gr. F347H[1] A 182 Gr. F348[2] A 182 Gr. F348H[1]	A 240 Gr. 347[2] A 240 Gr. 347H[1] A 240 Gr. 348[2] A 240 Gr. 348H[1]

Notes
1 At temperatures over 1000°F, use only if the material is heat treated by heating to a minimum temperature of 2000°F.
2 Not to be used over 1000°F.

.

Pressure/temperature ratings

Temperature		Working Pressures by Classes, psig						
°F	°C	150 lb	300 lb	400 lb	600 lb	900 lb	1500 lb	2500 lb
-20 to 100	-29 to 37.8	275	720	960	1440	2160	3600	6000
300	149	230	615	820	1230	1845	3070	5120
500	260	170	540	720	1080	1620	2700	4500
700	371	110	495	660	990	1485	2470	4120
850	454	65	485	645	970	1455	2425	4040
1000	538	20	365	485	725	1090	1820	3030
1150	566	-	275	365	550	825	1370	2285
1300	704	-	95	125	185	280	465	770
1400	760	-	55	75	110	165	275	455
1500	816	-	35	45	70	105	170	285

Note
- psig = pounds per square inch gauge (0 psig = 14.7 psi absolute)

Materials: 309S, 309H

Nominal Designation	Forgings	Plates
23Cr-12Ni	-	A 240 Gr. 309S[1,2,3] A 240 Gr. 309H

Notes
1 At temperatures over 1000°F, use only when the carbon content is 0.04% or higher.
2 For temperatures above 1000°F, use only if the material solution is heat treated to the minimum temperature specified in the specification but not lower than 1900°F, and quenching in water or rapidly cooling by other means.
3 This material should be used for service temperatures 1050°F and above only when assurance is provided that grain size is not finer than ASTM 6.

.

Pressure/temperature ratings

Temperature		Working Pressures by Classes, psig						
°F	°C	150 lb	300 lb	400 lb	600 lb	900 lb	1500 lb	2500 lb
-20 to 100	-29 to 37.8	260	670	895	1345	2015	3360	5600
300	149	220	570	760	1140	1705	2875	4740
500	260	170	505	670	1010	1510	2520	4200
700	371	110	455	610	910	1370	2280	3800
850	454	65	425	565	850	1275	2125	3540
1000	538	20	335	450	670	1010	1680	2800
1150	566	-	170	230	345	515	860	1430
1300	704	-	80	105	160	235	395	660
1400	760	-	45	60	90	135	225	370
1500	816	-	25	30	50	70	120	200

Note
- psig = pounds per square inch gauge (0 psig = 14.7 psi absolute)

Pressure/Temperature Ratings

Materials: 310, 310S, 310H

Nominal Designation	Forgings	Plates
25Cr-20Ni	A 182 Gr. F310[1,3]	A 240 Gr. 310S[1,2,3] A 240 Gr. 310H

Notes
1 At temperatures over 1000°F, use only when the carbon content is 0.04% or higher.
2 For temperatures above 1000°F, use only if the material is heat treated by heating it to a temperature of at least 1900°F and quenching in water or rapidly cooling by other means.
3 Service temperatures of 1050°F and above should only be used when assurance is provided that grain size is not finer than ASTM 6.

.

Pressure/temperature ratings

Temperature		Working Pressures by Classes, psig						
°F	°C	150 lb	300 lb	400 lb	600 lb	900 lb	1500 lb	2500 lb
-20 to 100	-29 to 37.8	260	670	895	1345	2015	3360	5600
300	149	220	570	760	1140	1705	2845	4740
500	260	170	505	675	1015	1520	2530	4220
700	371	110	455	610	910	1370	2280	3800
850	454	65	425	575	855	1280	2135	3560
1000	538	20	345	460	685	1030	1720	2865
1150	566	-	190	250	375	565	945	1570
1300	704	-	75	100	150	225	375	630
1400	760	-	45	60	90	135	225	370
1500	816	-	25	35	50	75	130	215

Note
- psig = pounds per square inch gauge (0 psig = 14.7 psi absolute)

Materials: F44, F51, F53

Nominal Designation	Forgings	Plates
20Cr-18Ni-6Mo 22Cr-5Ni-3Mo-N 25Cr-7Ni-4Mo-N	A 182 Gr. F44 A 182 Gr. F51[1] A 182 Gr. F53[1]	A 240 Gr. S31254 A 240 Gr. S31803[1] A 240 Gr. S32750[1]

Note
1 This steel may become brittle after service at moderately elevated temperatures. Not to be used over 600°F.

Pressure/temperature ratings

Temperature		Working Pressures by Classes, psig						
°F	°C	150 lb	300 lb	400 lb	600 lb	900 lb	1500 lb	2500 lb
-20 to 100	-29 to 37.8	290	750	1000	1500	2250	3750	6250
300	149	230	665	885	1330	1995	3325	5540
500	260	170	575	770	1150	1730	2880	4800
700	371	110	540	725	1085	1625	2710	4520
750	399	95	530	710	1065	1595	2660	4430

Note
- psig = pounds per square inch gauge (0 psig = 14.7 psi absolute)

SAE-Flanges










Contents

Split Flange Halves

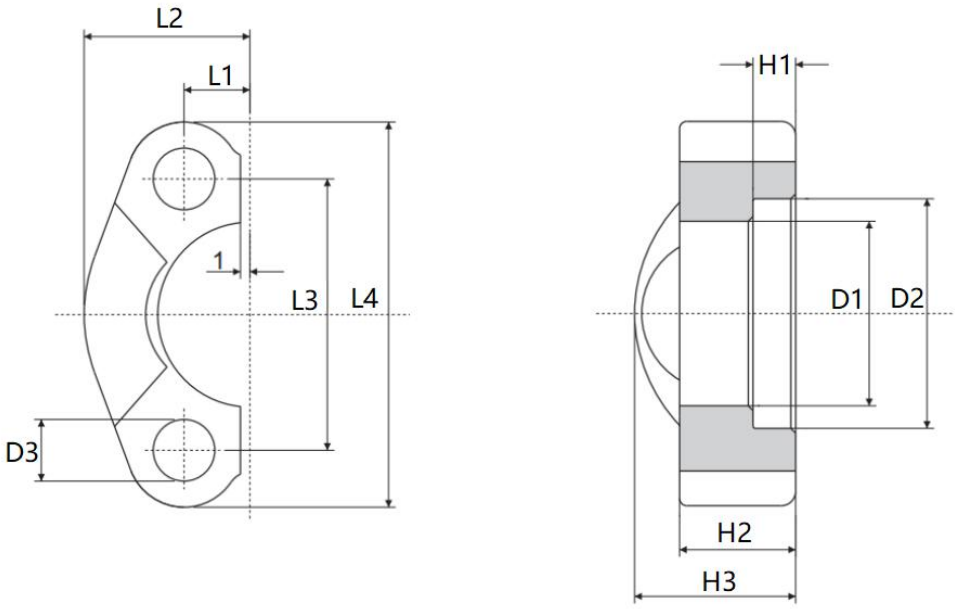

3000PSI

Type	Size	Dimensions(mm)												Weight	Pressure
	Inch	L1	L2	L3	L4	H1	H2	H3	D1	D2	D3	M	UNC	Kg	Bar
FH301	1/2	8.75	23	38.1	54	6.2	13	19	31	24.5	8.5	M8	5/16	0.07	345
FH302	3/4	11.13	25.9	47.6	65	6.2	14.3	22	38.93	32.2	10.5	M10	3/8	0.1	345
FH303	1	13.08	29.2	52.4	70	7.5	16	24	45.25	38.8	10.5	M10	3/8	0.12	345
FH304	1 1/4	15.09	36.3	58.7	79	7.5	16	24	51.6	43.7	10.5	M10	—	0.18	276
FH304/U	1 1/4	15.09	36.3	58.7	79	7.5	16	24	51.6	43.7	11.8	—	7/16	0.18	276
FH304/12	1 1/4	15.09	36.3	58.7	79	7.5	16	24	51.6	43.7	12.5	M12	—	0.18	276
FH305	11/2	17.86	41	69.9	94	7.5	16	25	61.1	50.8	13.3	M12	1/2	0.23	207
FH306	2	21.44	48.2	77.8	102	9	16	26	72.25	62.8	13.3	M12	1/2	0.26	207
FH306/14	2	21.44	48.2	77.8	102	9	16	26	72.25	62.8	14.6	M14	—	0.26	207
FH307	2 1/2	25.4	54	88.9	114	9	19	38	84.95	74.95	13.3	M12	1/2	0.42	172
FH308	3	30.96	65.3	106	135	9	22	41	102.4	90.95	17	M16	5/8	0.68	138
FH309	3 1/2	34.92	69.5	121	152	10.7	22	28	115.1	102.4	17	M16	5/8	0.62	34
FH310	4	38.88	76	130	162	10.7	25	35	127.8	115.1	17	M16	5/8	0.85	34
FH311	5	46.04	90	152	184	10.7	28	41	153.2	140.5	17	M16	5/8	1.2	34

6000PSI

Type	Size	Dimensions(mm)										Bolt		Weigh	Pressure
	Inch	L1	L2	L3	L4	H1	H2	H3	D1	D2	D3	M	UNC	t Kg	Bar
FH601	1/2	9.12	23.6	40.5	56	7.2	16	22	32.55	24.65	8.5	M8	5/16	0.09	414
FH602	3/4	11.91	30	50.8	71	8.25	19	28	42.1	32.5	10.5	M10	3/8	0.17	414
FH603	1	13.89	34.8	57.2	81	9	24	33	48.4	38.9	12.6	M12	7/16	0.26	414
FH604/12	1 1/4	15.88	38.6	66.7	95	9.8	27	38	54.8	44.5	13.3	M12	1/2	0.4	414
FH604	11/4	15.88	38.6	66.7	95	9.8	27	38	54.8	44.5	14.6	M14	—	0.4	414
FH605	1 1/2	18.26	47.5	79.4	113	12	30	43	64.3	51.6	17	M16	5/8	0.68	414
FH606	2	22.23	56.9	96.8	133	12	37	52	80.2	67.6	21	M20	3/4	1.05	414
FH607	2 1/2	29.4	75	124	180	20.5	45	45	108.9	90	25	M24	—	2.1	414
FH608	3	35.8	99	152	215	25.5	55	55	132.5	115	31.5	M30	—	4.25	414

Split Flange Halves-Flat Face

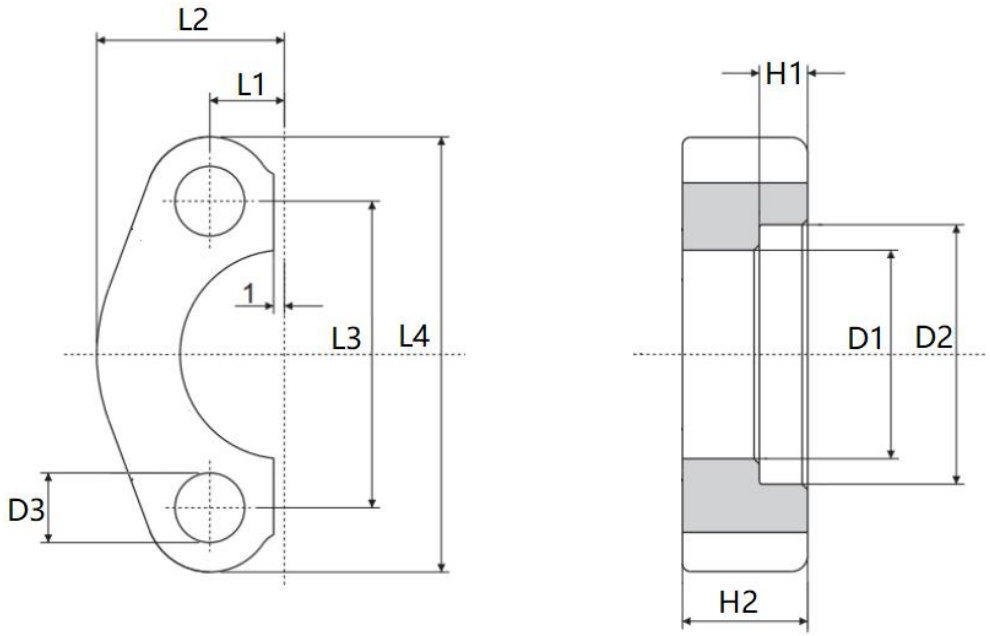

3000PSI

Type	Size	Dimensions(mm)									Bolt		Weight	Pressure
	Inch	L1	L2	L3	L4	H1	H2	D1	D2	D3	M	UNC	Kg	Bar
HF301	1/2	8.75	23	38.1	54	6.2	13	31	24.5	8.5	M8	5/16	0.06	345
HF302	3/4	11.13	25.9	47.6	65	6.2	14	38.9	32.15	10.5	M10	3/8	0.09	345
HF303	1	13.08	29.2	52.4	70	7.5	16	45.25	38.8	10.5	M10	3/9	0.11	345
HF304	1 1/4	15.09	36.3	58.7	79	7.5	16	51.6	43.7	10.5	M10	——	0.16	276
HF305	1 1/2	17.86	41	69.9	94	7.5	16	61.1	50.8	13.3	M12	1/2	0.22	207
HF306	2 1/2	21.44	48.2	77.8	102	9	16	72.25	62.75	13.3	M12	1/2	0.25	207

6000PSI

Type	Size	Dimensions(mm)									Bolt		Weight	Pressure
	Inch	L1	L2	L3	L4	H1	H2	D1	D2	D3	M	UNC	Kg	Bar
HF601	1/2	9.12	23.6	40.49	56	7.20	16	32.55	24.65	8.5	M8	5/16	0.08	414
HF602	3/4	11.91	30	50.80	71	8.25	19	42.1	32.50	10.5	M10	3/8	0.16	414
HF603	1	13.89	34.8	57.17	81	9	24	48.4	38.90	12.6	M12	7/16	0.25	414
HF604	1 1/4	15.88	38.6	66.68	95	9.80	27	54.8	44.5	14.6	M14	——	0.38	414
HF605	1 1/2	18.26	47.5	79.38	113	12	30	64.3	51.6	17	M16	5/8	0.65	414
HF606	2	22.23	56.9	96.82	133	12	37	80.2	67.6	21	M20	3/4	1	414

Flange Clamp

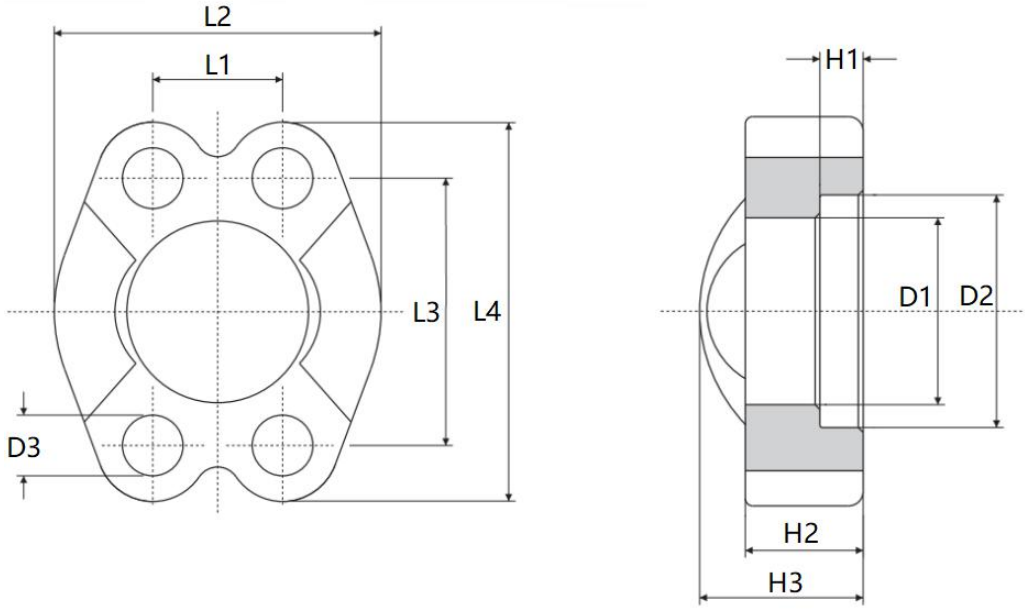

3000PSI

Type	Size	Dimensions(mm)										Bolt		Weight	Pressure
	Inch	L1	L2	L3	L4	H1	H2	H3	D1	D2	D3	M	UNC	Kg	Bar
VF301	1/2	17.5	46	38.1	54	6.2	13	19	31	24.5	8.5	M8	5/16	0.15	345
VF302	3/4	22.26	51.8	47.6	65	6.2	14.3	22	38.9	32.15	10.5	M10	3/8	0.21	345
VF303	1	26.16	58.4	52.4	70	7.5	16	24	45.25	38.6	10.5	M10	3/8	0.25	345
VF304	1 1/4	30.18	72.6	58.7	79	7.5	16	24	51.6	43.7	10.5	M10	——	0.36	276
VF304/U	1 1/4	30.18	72.6	58.7	79	7.5	16	24	51.6	43.7	11.8	——	7/16	0.36	276
VF304/12	1 1/4	30.18	72.6	58.7	79	7.5	16	24	51.6	43.7	12.5	M12	——	0.36	276
VF305	1 1/2	35.72	82.2	69.9	94	7.5	16	25	61.1	50.8	13.3	M12	1/2	0.48	207
VF306	2	42.88	96.4	77.8	102	9	16	26	72.25	62.75	13.3	M12	1/2	0.52	207
VF306/14	2	42.88	96.4	77.8	102	9	16	26	72.25	62.75	14.6	M14	——	0.52	207
VF307	2 1/2	50.8	108	88.9	114	9	19	38	84.95	74.95	13.3	M12	1/2	0.85	172
VF308	3	61.92	131	106	135	9	22	41	102.4	90.95	17	M16	5/8	1.38	138
VF309	3 1/2	69.84	139	121	152	10.7	22	28	115.1	102.4	17	M16	5/8	1.5	34
VF310	4	77.76	152	130	162	10.7	25	35	127.8	115.1	17	M16	5/8	1.7	34
VF311	5	92.08	180	152	184	10.7	28	41	153.2	140.5	17	M16	5/8	2.5	34

6000PSI

Type	Size	Dimensions(mm)										Bolt		Weight	Pressure
	Inch	L1	L2	L3	L4	H1	H2	H3	D1	D2	D3	M	UNC	Kg	Bar
VF601	1/2	18.24	47.2	40.5	56	7.2	16	22	32.55	24.65	8.5	M8	5/16	0.19	414
VF602	3/4	23.8	60	50.8	71	8.25	19	28	42.1	32.5	10.5	M10	3/8	0.35	414
VF603	1	27.78	69.6	57.2	81	9	24	33	48.4	38.9	12.6	M12	7/16	0.54	414
VF604/12	1 1/4	31.76	77.2	66.7	95	9.8	27	38	54.8	44.5	13.3	M12	1/2	0.8	414
VF604	1 1/4	31.76	77.2	66.7	95	9.8	27	38	54.8	44.5	14.6	M14	——	0.8	414
VF605	1 1/2	36.52	95	79.4	113	12	30	43	64.3	51.6	17	M16	5/8	1.4	414
VF606	2	44.46	114	96.8	133	12	37	52	80.2	67.6	21	M20	3/4	2.1	414
VF607	2 1/2	58.8	150	124	180	20.5	45	45	108.9	90	25	M24	——	4.3	414
VF608	3	71.6	198	152	215	25.5	55	55	132.5	115	31.5	M30	——	8.6	414

Flange Clamp-Flat Face

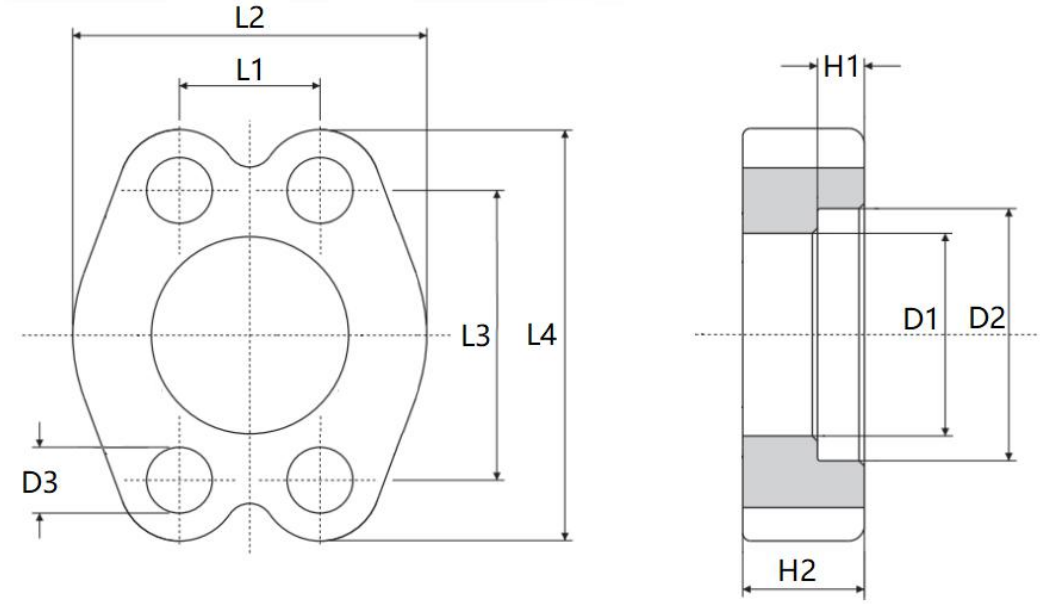

3000PSI

Type	Size	Dimensions(mm)									Bolt		Weight	Pressure
	Inch	L1	L2	L3	L4	H1	H2	D1	D2	D3	M	UNC	Kg	Bar
FP301	1/2	17.5	46	38.1	54	6.2	13	31	24.5	8.5	M8	5/16	0.15	345
FP302	3/4	22.26	51.8	47.6	65	6.2	14.3	38.9	32.15	10.5	M10	3/8	0.21	345
FP303	1	26.16	58.4	52.4	70	7.5	16	45.25	38.6	10.5	M10	3/8	0.25	345
FP304	1 1/4	30.18	72.6	58.7	79	7.5	16	51.6	43.7	10.5	M10	——	0.36	276
FP304/U	1 1/4	30.18	72.6	58.7	79	7.5	16	51.6	43.7	11.8	——	7/16	0.36	276
FP304/12	1 1/4	30.18	72.6	58.7	79	7.5	16	51.6	43.7	12.5	M12	——	0.36	276
FP305	1 1/2	35.72	82.2	69.9	94	7.5	16	61.1	50.8	13.3	M12	1/2	0.48	207
FP306	2	42.88	96.4	77.8	102	9	16	72.25	62.75	13.3	M12	1/2	0.52	207
FP306/14	2	42.88	96.4	77.8	102	9	16	72.25	62.75	14.6	M14	——	0.52	207
FP307	2 1/2	50.8	108	88.9	114	9	19	84.95	74.95	13.3	M12	1/2	0.85	172
FP308	3	61.92	131	106	135	9	22	102.4	90.95	17	M16	5/8	1.38	138
FP309	3 1/2	69.84	139	121	152	10.7	22	115.1	102.4	17	M16	5/8	1.5	34
FP310	4	77.76	152	130	162	10.7	25	127.8	115.1	17	M16	5/8	1.7	34
FP311	5	92.08	180	152	184	10.7	28	153.2	140.5	17	M16	5/8	2.5	34

6000PSI

Type	Size	Dimensions(mm)									Bolt		Weight	Pressure
	Inch	L1	L2	L3	L4	H1	H2	D1	D2	D3	M	UNC	Kg	Bar
FP601	1/2	18.24	47.2	40.5	56	7.2	16	32.55	24.65	8.5	M8	5/16	0.19	414
FP602	3/4	23.8	60	50.8	71	8.25	19	42.1	32.5	10.5	M10	3/8	0.35	414
FP603	1	27.78	69.6	57.2	81	9	24	48.4	38.9	12.6	M12	7/16	0.54	414
FP604/12	1 1/4	31.76	77.2	66.7	95	9.8	27	54.8	44.5	13.3	M12	1/2	0.8	414
FP604	1 1/4	31.76	77.2	66.7	95	9.8	27	54.8	44.5	14.6	M14	——	0.8	414
FP605	1 1/2	36.52	95	79.4	113	12	30	64.3	51.6	17	M16	5/8	1.4	414
FP606	2	44.46	114	96.8	133	12	37	80.2	67.6	21	M20	3/4	2.1	414
FP607	2 1/2	58.8	150	124	180	20.5	45	108.9	90	25	M24	——	4.3	414
FP608	3	71.6	198	152	215	25.5	55	132.5	115	31.5	M30	——	8.6	414

Counter Flange Clamp

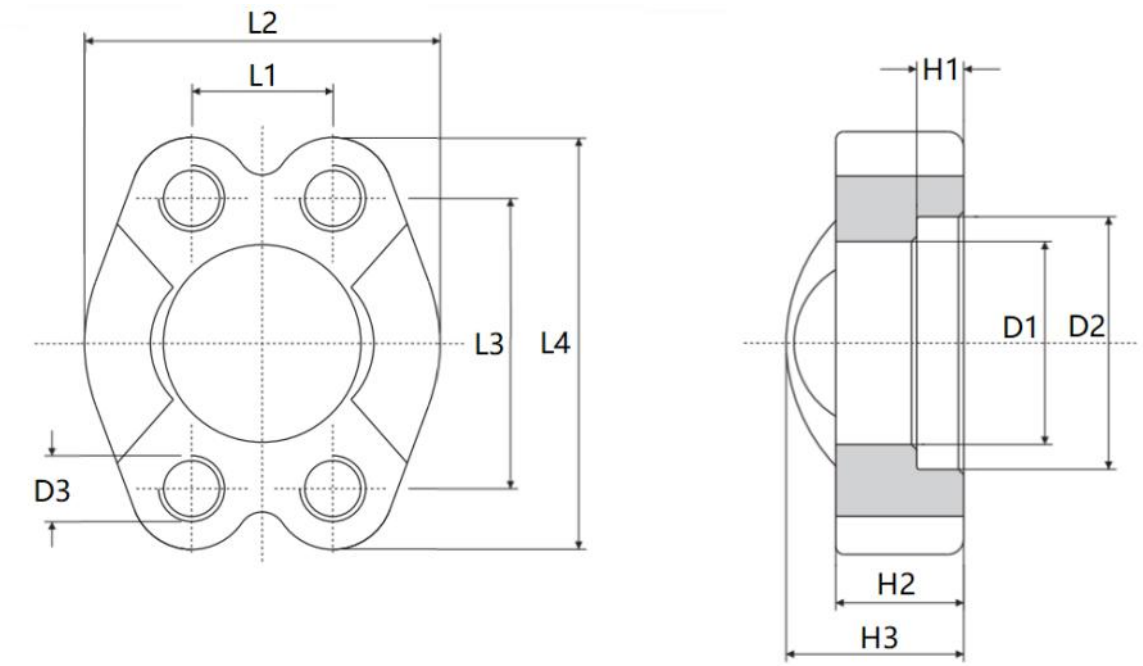

3000PSI

Type	Size	Dimensions(mm)									Bolt		Weight	Pressure
	Inch	L1	L2	L3	L4	H1	H2	H3	D1	D2	M	UNC	Kg	Bar
VFG301	1/2	17.5	46	38.1	54	6.2	13	19	31	24.5	M8	5/16	0.15	345
VFG302	3/4	22.26	51.8	47.6	65	6.2	14.3	22	38.9	32.15	M10	3/8	0.21	345
VFG303	1	26.16	58.4	52.4	70	7.5	16	24	45.25	38.6	M10	3/8	0.25	345
VFG304	1 1/4	30.18	72.6	58.7	79	7.5	16	24	51.6	43.7	M10	——	0.36	276
VFG304/12	1 1/4	30.18	72.6	58.7	79	7.5	16	24	51.6	43.7	M12	7/16	0.36	276
VFG305	1 1/2	35.72	82.2	69.9	94	7.5	16	25	61.1	50.8	M12	1/2	0.48	207
VFG306	2	42.88	96.4	77.8	102	9	16	26	72.25	62.75	M12	1/2	0.52	207
VFG307	2 1/2	50.8	108	88.9	114	9	19	38	84.95	74.95	M12	1/2	0.85	172
VFG308	3	61.92	131	106	135	9	22	41	102.4	90.95	M16	5/8	1.38	138
VFG309	3 1/2	69.84	139	121	152	10.7	22	28	115.1	102.4	M16	5/8	1.5	34
VFG310	4	77.76	152	130	162	10.7	25	35	127.8	115.1	M16	5/8	1.7	34
VFG311	5	92.08	180	152	184	10.7	28	41	153.2	140.5	M16	5/8	2.5	34

6000PSI

Type	Size	Dimensions(mm)									Bolt		Weight	Pressure
	Inch	L1	L2	L3	L4	H1	H2	H3	D1	D2	M	UNC	Kg	Bar
VFG601	1/2	18.24	47.2	40.5	56	7.2	16	22	32.55	24.65	M8	5/16	0.19	414
VFG602	3/4	23.8	60	50.8	71	8.25	19	28	42.1	32.5	M10	3/8	0.35	414
VFG603	1	27.78	69.6	57.2	81	9	24	33	48.4	38.9	M12	7/16	0.54	414
VFG604/12	1 1/4	31.76	77.2	66.7	95	9.8	27	38	54.8	44.5	M12	1/2	0.8	414
VFG604	1 1/4	31.76	77.2	66.7	95	9.8	27	38	54.8	44.5	M14	——	0.8	414
VFG605	1 1/2	36.52	95	79.4	113	12	30	43	64.3	51.6	M16	5/8	1.4	414
VFG606	2	44.46	114	96.8	133	12	37	52	80.2	67.6	M20	3/4	2.1	414

Socket Weld Flange

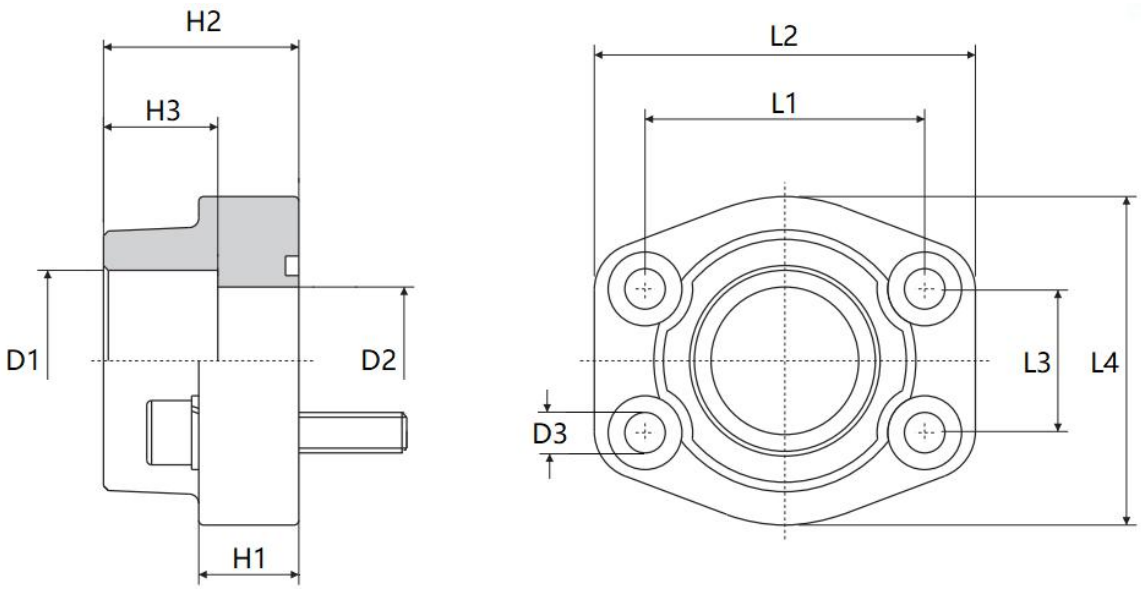

3000PSI

Type	Size	Dimensions(mm)										Accessories		Weight	Pressure
	Inch	D1	D2	D3	L1	L2	L3	L4	H1	H2	H3	Bolt	O-Ring	KG	Bar
AFS 301S	1/2	21.6	13	9	38.10	54	17.50	46	16	36	19	M8×30	18.66×3.53	0.25	345
AFS 302S	3/4	27.2	19	11	47.63	65	22.26	50	18	36	19	M10×35	25×3.53	0.39	345
AFS 302S/25	3/4	25.3	19	11	47.63	65	22.26	50	18	36	19	M10×35	25×3.53	0.39	345
AFS 303S	1	34	25	11	52.37	70	26.16	55	18	38	19	M10×35	32.92×3.53	0.46	345
AFS 304S	1 1/4	42.8	32	11.5	58.72	79	30.18	68	21	41	22	M10×40	37.70×3.53	0.66	276
AFS 304S/38	1 1/4	38.3	32	11.5	58.72	79	30.18	68	21	41	22	M10×40	37.70×3.53	0.66	276
AFS 305S	1 1/2	48.6	38	13.5	69.85	93	35.72	78	25	45	24	M12×45	47.22×3.53	1.05	207
AFS 305S/50	1 1/2	50.5	38	13.5	69.85	93	35.72	78	25	45	24	M12×45	47.22×3.53	1.05	207
AFS 306S	2	61	51	13.5	77.77	102	42.88	90	25	45	26	M12×45	56.75×3.53	1.19	207
AFS 307S	2 1/2	76	63	13.5	88.90	114	50.80	105	25	50	30	M12×45	69.45×3.53	1.40	172
AFS 308S	3	90.5	73	17	106.36	134	61.92	124	27	50	34	M16×50	85.32×3.53	2.15	138
AFS 309S	3 1/2	103	89	17	120.65	152	69.84	136	27	48	34	M16×50	98.02×3.53	2.40	34
AFS 310S	4	115.6	99	17	130.18	162	77.76	146	27	48	34	M16×50	110.72×3.53	2.85	34

6000PSI

Type	Size	Dimensions(mm)										Accessories		Weight	Pressure
	Inch	D1	D2	D3	L1	L2	L3	L4	H1	H2	H3	Bolt	O-Ring	KG	Bar
AFS 601S	1/2	21.60	13	9	40.49	54	18.24	46	16	36	19	M8×30	18.66×3.53	0.26	414
AFS 602S	3/4	27.20	19	11	50.80	71	23.80	55	21	36	22	M10×35	25×3.53	0.50	414
AFS 603S	1	34.00	25	13	57.17	81	27.78	65	25	42	22	M12×45	32.92×3.53	0.76	414
AFS 604S	1 1/4	42.80	32	15	66.68	95	31.76	78	27	45	25	M14×50	37.70×3.53	1.20	414
AFS 604S/38	1 1/4	38.30	32	15	66.68	95	31.76	78	27	45	25	M14×50	37.70×3.53	1.20	414
AFS 605S	1 1/2	48.60	38	17	79.38	112	36.52	94	30	50	28	M16×55	47.22×3.53	1.65	414
AFS 606S	2	61.00	51	21	96.82	134	44.46	114	37	65	32	M20×70	56.75×3.53	2.45	414

Socket Weld Counter Flange

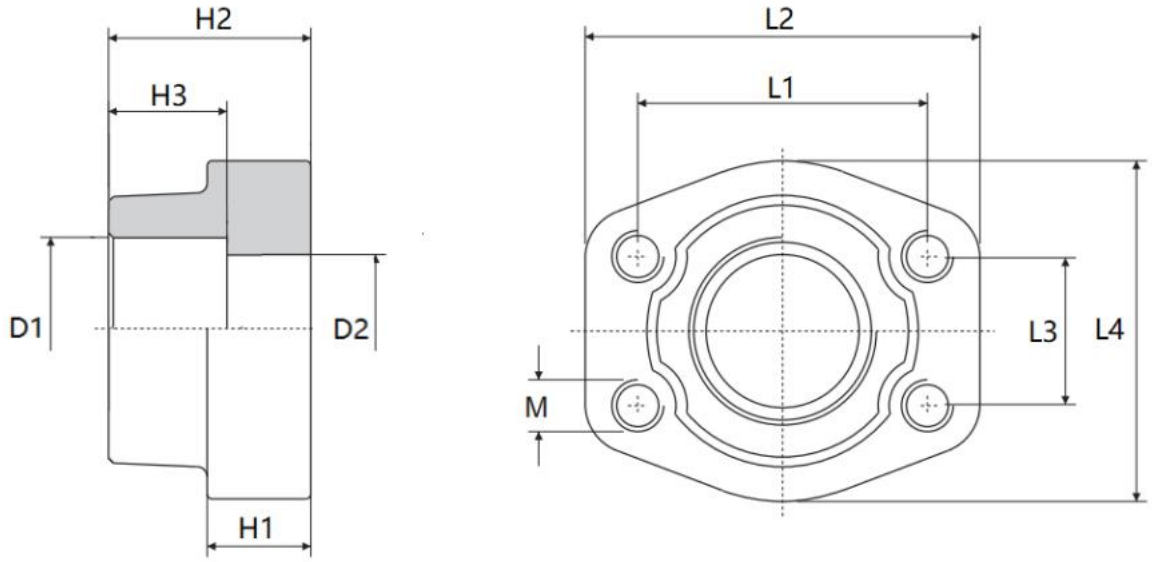

3000PSI

Type	Size	Dimensions(mm)										Weight	Pressure
	Inch	D1	D2	L1	L2	L3	L4	H1	H2	H3	M	KG	Bar
GFS 301S	1/2	21.6	13	38.10	54	17.50	46	16	36	19	M8	0.25	345
GFS 302S	3/4	27.2	19	47.63	65	22.26	50	18	36	19	M10	0.39	345
GFS 302S/25	3/4	25.3	19	47.63	65	22.26	50	18	36	19	M10	0.39	345
GFS 303S	1	34	25	52.37	70	26.16	55	18	38	19	M10	0.46	345
GFS 304S	1 1/4	42.8	32	58.72	79	30.18	68	21	41	22	M10	0.66	276
GFS 304S/38	1 1/4	38.3	32	58.72	79	30.18	68	21	41	22	M10	0.66	276
GFS 305S	1 1/2	48.6	38	69.85	93	35.72	78	25	45	24	M12	1.05	207
GFS 305S/50	2	50.5	38	69.85	93	35.72	78	25	45	24	M12	1.05	207
GFS 306S	2	61	51	77.77	102	42.88	90	25	45	26	M12	1.19	207
GFS 307S	2 1/2	76.6	63	88.90	114	50.80	105	25	50	30	M12	1.40	172
GFS 308S	3	90.5	73	106.36	134	61.92	124	27	50	34	M16	2.15	138
GFS 309S	3 1/2	103	89	120.65	152	69.84	136	27	48	34	M16	2.40	34
GFS 310S	4	115.6	99	130.18	162	77.76	146	27	48	34	M16	2.85	34

6000PSI

Type	Size	Dimensions(mm)										Weight	Pressure
	Inch	D1	D2	L1	L2	L3	L4	H1	H2	H3	M	KG	Bar
GFS 601S	1/2	21.60	13	40.49	54	18.24	46	16	36	19	M8	0.26	414
GFS 602S	3/4	27.20	19	50.80	71	23.80	55	21	36	22	M10	0.50	414
GFS 603S	1	34.00	25	57.17	81	27.78	65	25	42	22	M12	0.76	414
GFS 604S	1 1/4	42.80	32	66.68	95	31.76	78	27	45	25	M14	1.20	414
GFS 604S/38	1 1/4	38.30	32	66.68	95	31.76	78	27	45	25	M14	1.20	414
GFS 605S	1 1/2	48.60	38	79.38	112	36.52	94	30	50	28	M16	1.65	414
GFS 606S	2	61.00	51	96.82	134	44.46	114	37	65	32	M20	2.45	414

Socket-welding 90° Flange

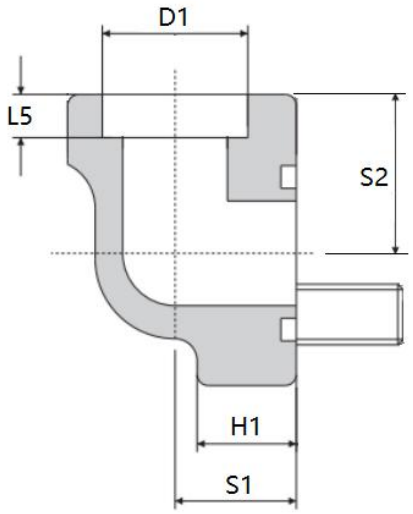

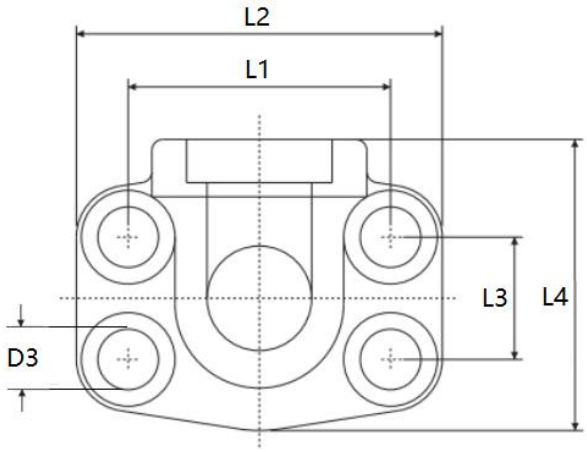

3000PSI

Type	Size	Dimensions(mm)											Accessories		Weight	Pressure
	Inch	D1	D2	D3	L1	L2	L3	L4	L5	H	S1	S2	Bolt	O-Ring	Kg	Bar
AFW301S	1/2	21.6	13	9	38.1	54	17.5	60	10	16	20	37	M8×30	18.66×3.53	0.4	345
AFW302S	3/4	27.2	19	11	47.63	65	22.26	63	10	18	24	38	M10×35	25.00×3.53	0.6	
AFW303S	1	34	25	11	52.37	70	26.16	70	12	19	28	43	M10×35	32.92×3.53	0.8	345
AFW304S	1 1/4	42.8	32	11.5	58.72	79	30.18	85	14	21	34	51	M10×40	37.70×3.53	1.2	
AFW305S	1 1/2	48.6	38	13.5	69.85	93	35.72	95	16	25	38	55	M12×45	47.22×3.53	1.65	207
AFW306S	2	61	51	13.5	77.77	102	42.88	110	18	25	42	65	M12×45	56.75×3.53	2	

6000PSI

Type	Size	Dimensions(mm)											Accessories		Weight	Pressure
	Inch	D1	D2	D3	L1	L2	L3	L4	L5	H	S1	S2	Bolt	O-Ring	Kg	Bar
AFW601S	1/2	21.6	13	9	40.49	54	18.24	60	10	16	20	37	M8×30	18.66×3.53	0.5	414
AFW602S	3/4	27.2	19	11	50.8	71	23.8	70	12	19	28	43	M10×35	25.00×3.53		
AFW603S	1	34	25	13	57.17	79	27.78	85	14	21	34	51	M12×40	32.92×3.53	1.5	414
AFW604S	1 1/4	42.8	32	15	66.68	93	31.76	95	16	25	38	56	M14×45	37.70×3.53		
AFW605S	1 1/2	48.6	38	17	79.38	112	36.52	100	18	25	42	65	M16×45	47.22×3.53	2.8	414
AFW606S	2	61	51	21	96.82	134	44.46	150	18	29	60	92	M20×55	56.75×3.53		

Socket Weld Flange Coupling

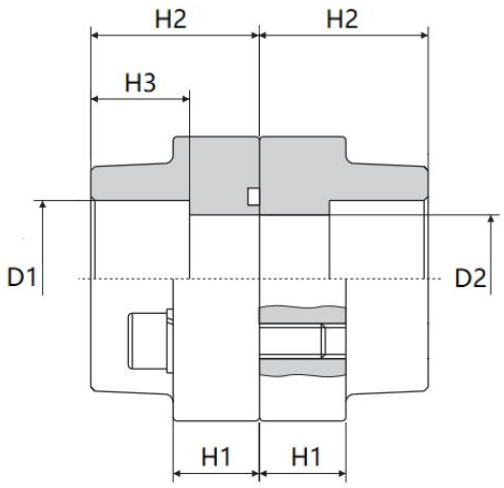

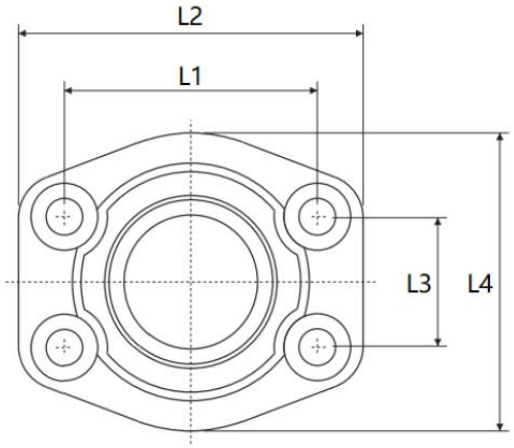

3000PSI

Type	Size	Dimensions(mm)									Accessories		Weight	Pressure
	Inch	D1	D2	L1	L2	L3	L4	H1	H2	H3	Bolt	O-Ring	KG	Bar
DFS 301S	1/2	21.6	13	38.10	54	17.50	46	16	36	19	M8×30	18.66×3.53	0.5	345
DFS 302S	3/4	27.2	19	47.63	65	22.26	50	18	36	19	M10×35	25×3.53	0.78	345
DFS 302S/25	3/4	25.3	19	47.63	65	22.26	50	18	36	19	M10×35	25×3.53	0.78	345
DFS 303S	1	34	25	52.37	70	26.16	55	18	38	19	M10×35	32.92×3.53	0.92	345
DFS 304S	1 1/4	42.8	32	58.72	79	30.18	68	21	41	22	M10×40	37.70×3.53	1.32	276
DFS 304S/38	1 1/4	38.3	32	58.72	79	30.18	68	21	41	22	M10×40	37.70×3.53	1.32	276
DFS 305S	1 1/2	48.6	38	69.85	93	35.72	78	25	45	24	M12×45	47.22×3.53	2.1	207
DFS 305S/50	1 1/2	50.5	38	69.85	93	35.72	78	25	45	24	M12×45	47.22×3.53	2.1	207
DFS 306S	2	61	51	77.77	102	42.88	90	25	45	26	M12×45	56.75×3.53	2.4	207
DFS 307S	2 1/2	76	63	88.90	114	50.80	105	25	50	30	M12×45	69.45×3.53	2.8	172
DFS 308S	3	90.5	73	106.36	134	61.92	124	27	50	34	M16×50	85.32×3.53	4.3	138
DFS 309S	3 1/2	103	89	120.65	152	69.84	136	27	48	34	M16×50	98.02×3.53	4.8	34
DFS 310S	4	115.6	99	130.18	162	77.76	146	27	48	34	M16×50	110.72×3.53	5.8	34

6000PSI

Type	Size	Dimensions(mm)									Accessories		Weight	Pressure
	Inch	D1	D2	L1	L2	L3	L4	H1	H2	H3	Bolt	O-Ring	KG	Bar
DFS 601S	1/2	21.60	13	40.49	54	18.24	46	16	36	19	M8×30	18.66×3.53	0.52	414
DFS 602S	3/4	27.20	19	50.80	71	23.80	55	21	36	22	M10×35	25×3.53	1	414
DFS 603S	1	34.00	25	57.17	81	27.78	65	25	42	22	M12×45	32.92×3.53	1.52	414
DFS 604S	1 1/4	42.80	32	66.68	95	31.76	78	27	45	25	M14×50	37.70×3.53	2.4	414
DFS 604S/38	1 1/4	38.30	32	66.68	95	31.76	78	27	45	25	M14×50	37.70×3.53	2.4	414
DFS 605S	1 1/2	48.60	38	79.38	112	36.52	94	30	50	28	M16×55	47.22×3.53	3.3	414
DFS 606S	2	61.00	51	96.82	134	44.46	114	37	65	32	M20×70	56.75×3.53	4.9	414

BSPP Thread Flange

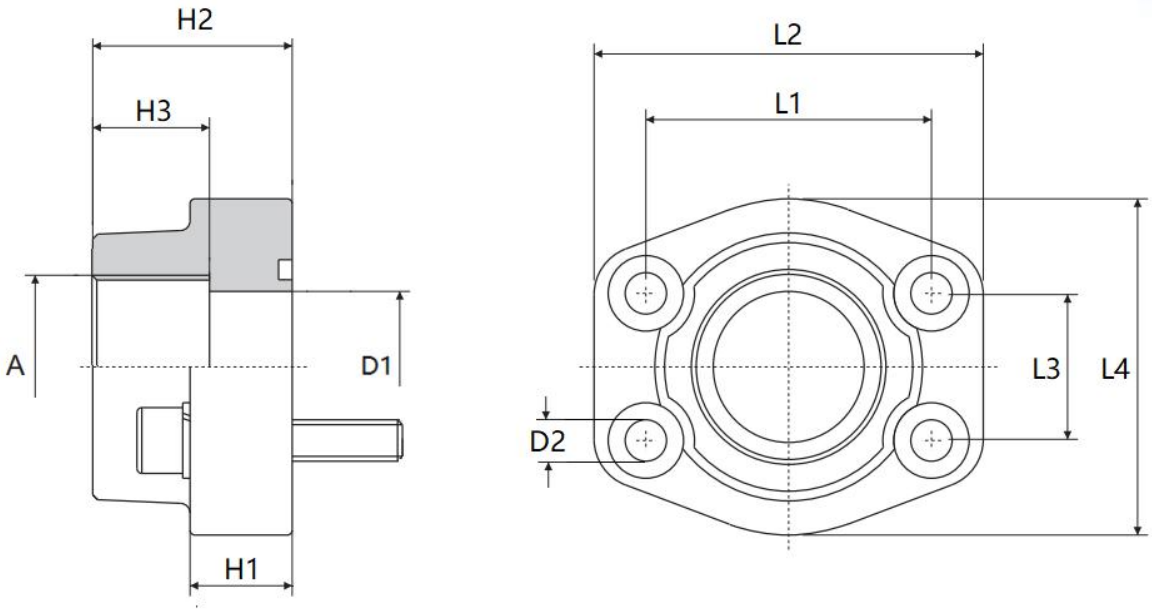

3000PSI

Type	Size	Dimensions(mm)										Accessories		Weight	Pressure
	Inch	A	D1	D2	L1	L2	L3	L4	H1	H2	H3	Bolt	O-Ring	Kg	Bar
AFS301G	1/2	G1/2	13	9	38.1	54	17.5	46	16	36	19	M8×30	18.66×3.53	0.25	345
AFS302G	3/4	G3/4	19	11	47.63	65	22.26	50	18	36	19	M10×35	25.00×3.53	0.39	345
AFS303G	1	G1	25	11	52.37	70	26.16	55	18	38	19	M10×35	32.92×3.53	0.46	345
AFS304G	1 1/4	G1 1/4	32	11.5	58.72	79	30.18	68	21	41	22	M10×40	37.70×3.53	0.66	276
AFS305G	1 1/2	G1 1/2	38	13.5	69.85	93	35.72	78	25	45	24	M12×45	47.22×3.53	1.05	207
AFS306G	2	G2	51	13.5	77.77	102	42.88	90	25	45	26	M12×45	56.75×3.53	1.19	207
AFS307G	2 1/2	G2 1/2	63	13.5	88.9	114	50.8	105	25	50	30	M12×45	69.45×3.53	1.4	172
AFS308G	3	G3	73	17	106.38	134	61.92	124	27	50	34	M16×50	85.32×3.53	2.15	138

6000PSI

Type	Size	Dimensions(mm)										Accessories		Weight	Pressure
	Inch	A	D1	D2	L1	L2	L3	L4	H1	H2	H3	Bolt	O-Ring	Kg	Bar
AFS601G	1/2	G1/2	13	9	40.49	54	18.24	46	16	36	19	M8*30	18.66×3.53	0.26	414
AFS602G	3/4	G3/4	19	11	50.8	71	23.8	55	21	36	22	M10*35	25.00×3.53	0.5	414
AFS603G	1	G1	25	13	57.17	81	27.78	65	25	42	22	M12*50	32.92×3.53	0.76	414
AFS604G	1 1/4	G1 1/4	32	15	66.68	95	31.78	78	27	45	25	M14*50	37.70×3.53	1.2	414
AFS605G	1 1/2	G1 1/2	38	17	79.38	112	36.52	94	30	50	28	M16*55	47.22×3.53	1.65	414
AFS606G	2	G2	51	21	96.82	134	44.46	114	37	65	32	M20*70	56.75×3.53	2.45	414

BSPP Thread Counter Flange

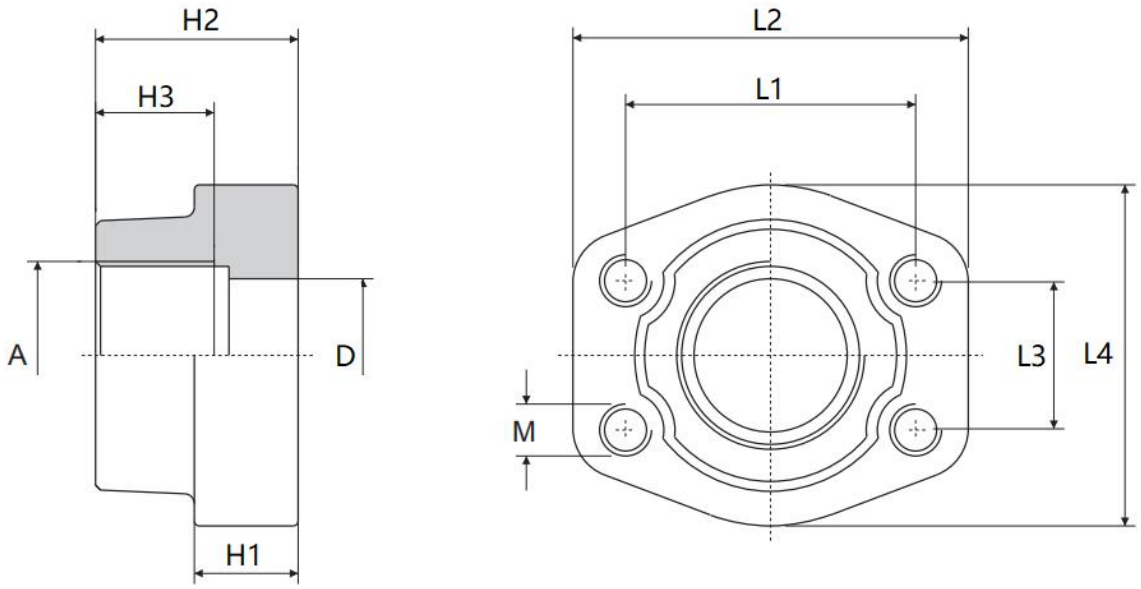

3000PSI

Type	Size	Dimensions(mm)										Weight	Pressure
	Inch	A	D	L1	L2	L3	L4	H1	H2	H3	M	Kg	Bar
GFS301G	1/2	G1/2	13	38.1	54	17.5	46	16	36	19	M8	0.25	345
GFS302G	3/4	G3/4	19	47.6	65	22.3	50	18	36	19	M10	0.39	345
GFS303G	1	G1	25	52.4	70	30.2	55	18	38	19	M10	0.46	345
GFS304G	1 1/4	G1 1/4	32	58.7	79	35.7	68	21	41	22	M10	0.66	276
GFS305G	1 1/2	G1 1/2	38	69.9	93	42.9	78	25	45	24	M12	1.05	207
GFS306G	2	G2	51	77.8	102	50.8	90	25	45	26	M12	1.19	207
GFS307G	2 1/2	G2 1/2	63	88.9	114	50.8	105	25	50	30	M12	1.4	172
GFS308G	3	G3	73	106	134	61.9	124	27	50	34	M16	2.15	138

6000PSI

Type	Size	Dimensions(mm)										Weight	Pressure
	Inch	A	D	L1	L2	L3	L4	H1	H2	H3	M	Kg	Bar
GFS601G	1/2	G1/2	13	40.5	54	18.2	46	16	36	19	M8	0.26	414
GFS602G	3/4	G3/4	19	50.8	71	23.8	55	21	36	22	M10	0.5	414
GFS603G	1	G1	25	57.2	81	27.8	65	25	42	22	M12	0.76	414
GFS604G	1 1/4	G1 1/4	32	66.7	95	31.8	78	27	45	25	M14	1.2	414
GFS605G	1 1/2	G1 1/2	38	79.4	112	36.5	94	30	50	28	M16	1.65	414
GFS606G	2	G2	51	96.8	134	44.5	114	37	65	32	M20	2.45	414

90° BSPP Thread Flange

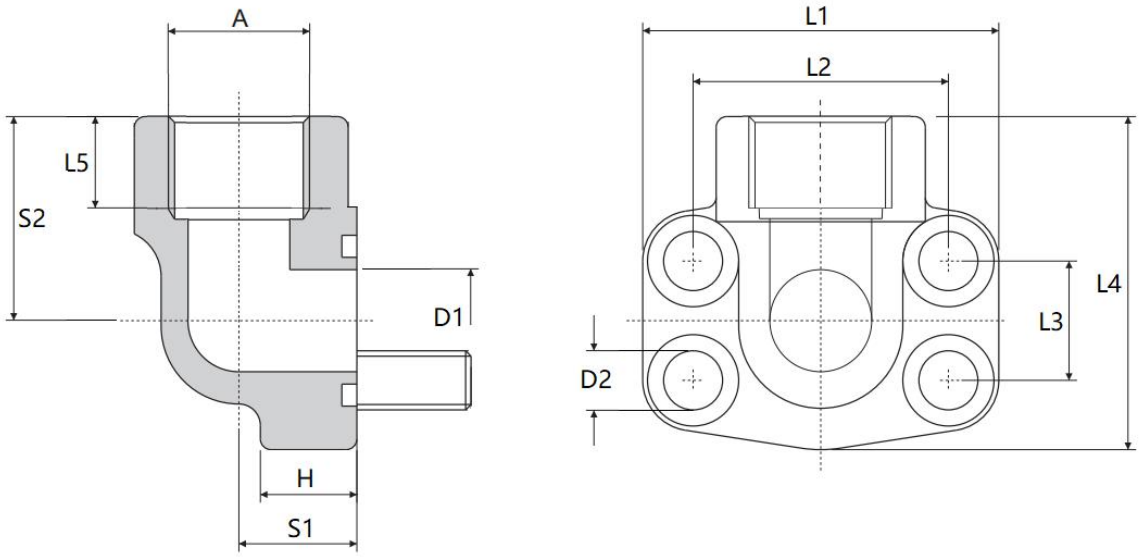

3000PSI

Type	Size	Dimensions(mm)											Accessories		Weight	Pressure
	Inch	A	D1	D2	L1	L2	L3	L4	L5	H	S1	S2	Bolt	O-Ring	Kg	Bar
AFW301G	1/2	G1/2	13	9	38.1	54	17.5	60	19	16	20	37	M8×30	18.66×3.53	0.4	345
AFW302G	3/4	G3/4	19	11	47.63	65	22.26	63	19	18	24	38	M10×35	25.00×3.53	0.6	345
AFW303G	1	G1	25	11	52.37	70	26.16	70	20	19	28	43	M10×35	32.92×3.53	0.8	345
AFW304G	1 1/4	G1 1/4	32	11	58.72	79	30.18	85	22	21	34	51	M10×40	37.70×3.53	1.2	276
AFW305G	1 1/2	G1 1/2	38	13.5	69.85	93	35.72	95	25	25	38	56	M12×45	47.22×3.53	1.65	207
AFW306G	2	G2	51	13.5	77.77	102	42.88	110	28	25	42	65	M12×45	56.75×3.53	2	207

6000PSI

Type	Size	Dimensions(mm)											Accessories		Weight	Pressure
	Inch	A	D1	D2	L1	L2	L3	L4	L5	H	S1	S2	Bolt	O-Ring	Kg	Bar
AFW601G	1/2	G1/2	13	9	40.49	54	18.24	60	19	16	20	37	M8×30	18.66×3.53	0.5	414
AFW602G	3/4	G3/4	19	11	50.8	70	23.8	70	19	19	28	43	M10×35	25.00×3.53	1.25	414
AFW603G	1	G1	25	13	57.17	79	27.78	85	20	21	34	51	M12×40	32.92×3.53	1.5	414
AFW604G	1 1/4	G1 1/4	32	15	66.68	93	31.76	95	22	25	38	56	M14×45	37.70×3.53	1.8	414
AFW605G	1 1/2	G1 1/2	38	17	79.38	110	36.52	100	25	25	42	65	M16×45	47.22×3.53	2.8	414
AFW606G	2	G2	51	21	96.82	134	44.46	150	28	29	60	92	M20×55	56.75×3.53	4	414

BSPP Thread Flange Coupling

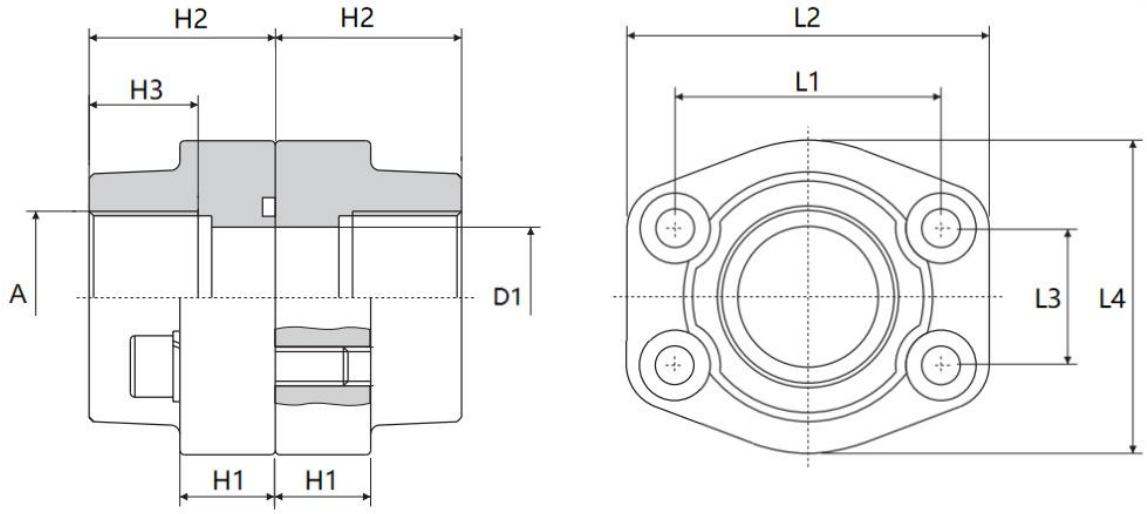

3000PSI

Type	Size	Dimensions(mm)									Accessories		Weight	Pressure
	Inch	A	D1	L1	L2	L3	L4	H1	H2	H3	Bolt	O-Ring	Kg	Bar
DFS301G	1/2	G1/2	13	38.1	54	17.5	46	16	36	19	M8×30	18.66×3.53	0.5	345
DFS302G	3/4	G3/4	19	47.63	65	22.26	50	18	36	19	M10×35	25.00×3.53	0.78	345
DFS303G	1	G1	25	52.37	70	26.16	55	18	38	19	M10×35	32.92×3.53	0.92	345
DFS304G	1 1/4	G1 1/4	32	58.72	79	30.18	68	21	41	22	M10×40	37.70×3.53	1.32	276
DFS305G	1 1/2	G1 1/2	38	69.85	93	35.72	78	25	45	24	M12×45	47.22×3.53	2.1	207
DFS306G	2	G2	51	77.77	102	42.88	90	25	45	26	M12×45	56.75×3.53	2.4	207
DFS307G	2 1/2	G2 1/2	63	88.9	114	50.8	105	25	50	30	M12×45	69.45×3.53	2.8	172
DFS308G	3	G3	73	106.38	134	61.92	124	27	50	34	M16×50	85.32×3.53	4.3	138

6000PSI

Type	Size	Dimensions(mm)									Accessories		Weight	Pressure
	Inch	A	D1	L1	L2	L3	L4	H1	H2	H3	Bolt	O-Ring	Kg	Bar
DFS601G	1/2	G1/2	13	40.49	54	18.24	46	16	36	19	M8*30	18.66×3.53	0.52	414
DFS602G	3/4	G3/4	19	50.8	71	23.8	55	21	36	22	M10*35	25.00×3.53	1	414
DFS603G	1	G1	25	57.17	81	27.78	65	25	42	22	M12*50	32.92×3.53	1.52	414
DFS604G	1 1/4	G1 1/4	32	66.68	95	31.78	78	27	45	25	M14*50	37.70×3.53	2.4	414
DFS605G	1 1/2	G1 1/2	38	79.38	112	36.52	94	30	50	28	M16*55	47.22×3.53	3.3	414
DFS606G	2	G2	51	96.82	134	44.46	114	37	65	32	M20*70	56.75×3.53	4.9	414

NPT Thread Flange

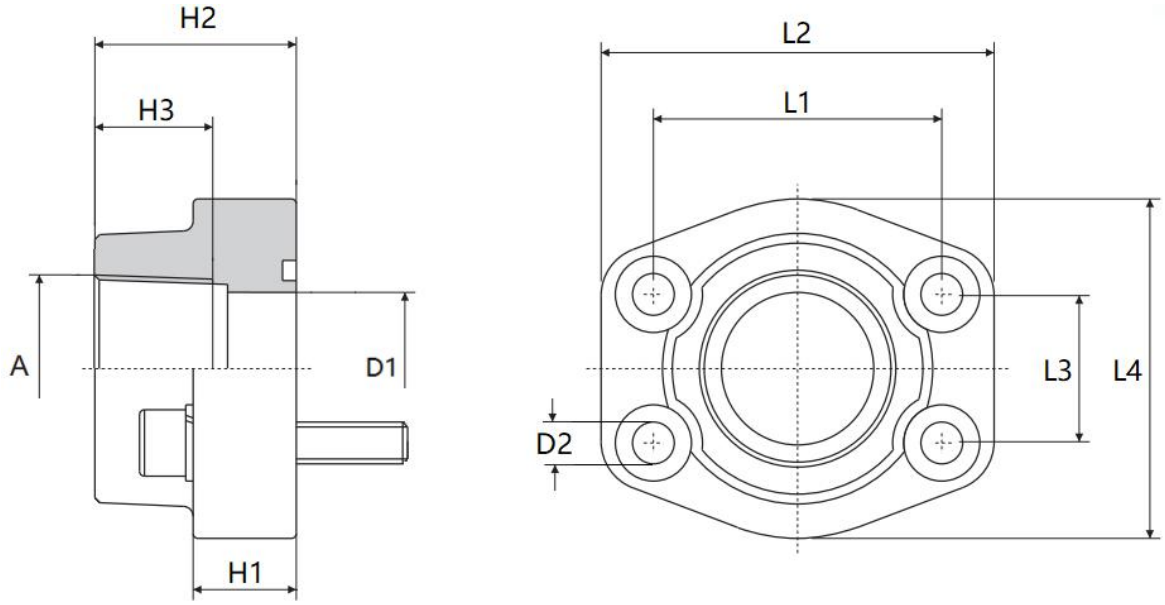

3000PSI

Type	Size	Dimensions(mm)										Accessories		Weight	Pressure
	Inch	A	D1	D2	L1	L2	L3	L4	H1	H2	H3	Bolt	O-Ring	Kg	Bar
AFS301N	1/2	NPT1/2	13	9	38.1	54	17.5	46	16	36	19	M8×30	18.66×3.53	0.25	345
AFS302N	3/4	NPT3/4	19	11	47.63	65	22.26	50	18	36	19	M10×35	25.00×3.53	0.39	345
AFS303N	1	NPT1	25	11	52.37	70	26.16	55	18	38	19	M10×35	32.92×3.53	0.46	345
AFS304N	1 1/4	NPT1 1/4	32	11.5	58.72	79	30.18	68	21	41	22	M10×40	37.70×3.53	0.66	276
AFS305N	1 1/2	NPT1 1/2	38	13.5	69.85	93	35.72	78	25	45	24	M12×45	47.22×3.53	1.05	207
AFS306N	2	NPT2	51	13.5	77.77	102	42.88	90	25	45	26	M12×45	56.75×3.53	1.19	207
AFS307N	2 1/2	NPT2 1/2	63	13.5	88.9	114	50.8	105	25	50	30	M12×45	69.45×3.53	1.4	172
AFS308N	3	NPT3	73	17	106.38	134	61.92	124	27	50	34	M16×50	85.32×3.53	2.15	138

6000PSI

Type	Size	Dimensions(mm)										Accessories		Weight	Pressure
	Inch	A	D1	D2	L1	L2	L3	L4	H1	H2	H3	Bolt	O-Ring	Kg	Bar
AFS601N	1/2	NPT1/2	13	9	40.49	54	18.24	46	16	36	19	M8×30	18.66×3.53	0.26	414
AFS602N	3/4	NPT3/4	19	11	50.8	71	23.8	55	21	36	22	M10×35	25.00×3.53	0.5	414
AFS603N	1	NPT1	25	13	57.17	81	27.78	65	25	42	22	M12×45	32.92×3.53	0.76	414
AFS604N	1 1/4	NPT1 1/4	32	15	66.68	95	31.78	78	27	45	25	M14×50	37.7×3.53	1.2	414
AFS605N	1 1/2	NPT1 1/2	38	17	79.38	112	36.52	94	30	50	28	M16×55	47.22×3.53	1.65	414
AFS606N	2	NPT2	51	21	96.82	134	44.46	114	37	65	32	M20×70	56.75×3.53	2.45	414

NPT Thread Counter Flange

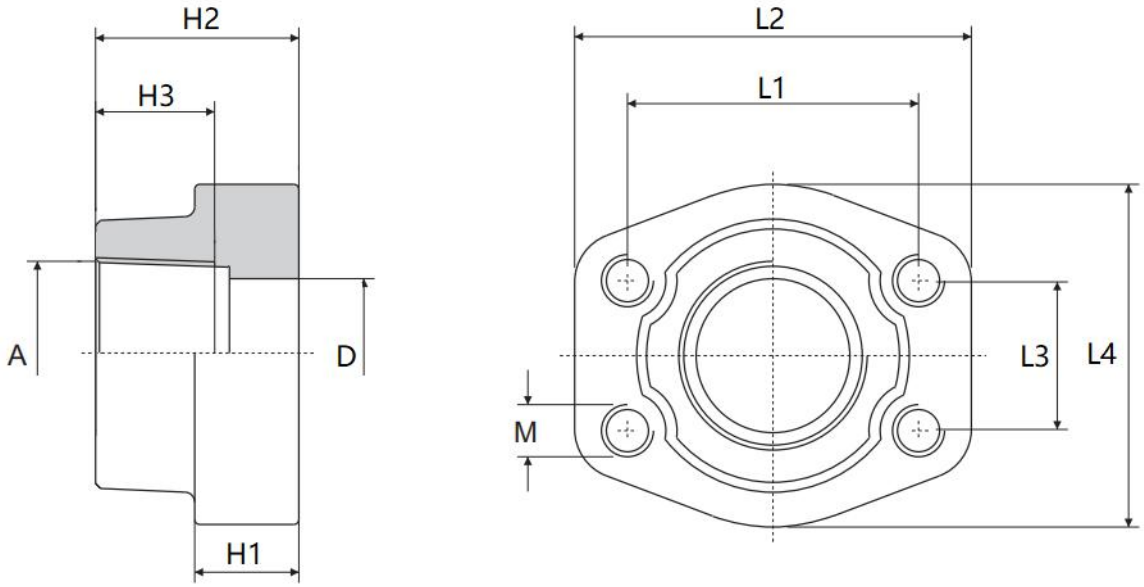

3000PSI

Type	Size	Dimensions(mm)										Weight	Pressure
	Inch	A	D	L1	L2	L3	L4	H1	H2	H3	M	Kg	Bar
GFS301N	1/2	NPT1/2	13	38.1	54	17.5	46	16	36	19	M8	0.25	345
GFS302N	3/4	NPT3/4	19	47.6	65	22.3	50	18	36	19	M10	0.39	345
GFS303N	1	NPT1	25	52.4	70	26.2	55	18	38	19	M10	0.46	345
GFS304N	1 1/4	NPT1 1/4	32	58.7	79	30.2	68	21	41	22	M10	0.66	276
GFS305N	1 1/2	NPT1 1/2	38	69.9	93	35.7	78	25	45	24	M12	1.05	207
GFS306N	2	NPT2	51	77.8	102	42.9	90	25	45	26	M12	1.19	207
GFS307N	2 1/2	NPT2 1/2	63	88.9	114	50.8	105	25	50	30	M12	1.4	172
GFS308N	3	NPT3	73	106	134	61.9	124	27	50	34	M16	2.15	138

6000PSI

Type	Size	Dimensions(mm)										Weight	Pressure
	Inch	A	D	L1	L2	L3	L4	H1	H2	H3	M	Kg	Bar
GFS601N	1/2	NPT1/2	13	40.5	54	18.2	46	16	36	19	M8	0.26	414
GFS602N	3/4	NPT3/4	19	50.8	71	23.8	55	21	36	22	M10	0.5	414
GFS603N	1	NPT1	25	57.2	81	27.8	65	25	42	22	M12	0.76	414
GFS604N	1 1/4	NPT1 1/4	32	66.7	95	31.8	78	27	45	25	M14	1.2	414
GFS605N	1 1/2	NPT1 1/2	38	79.4	112	36.5	94	30	50	28	M16	1.65	414
GFS606N	2	NPT2	51	96.8	134	44.5	114	37	65	32	M20	2.45	414

90° NPT Thread Flange

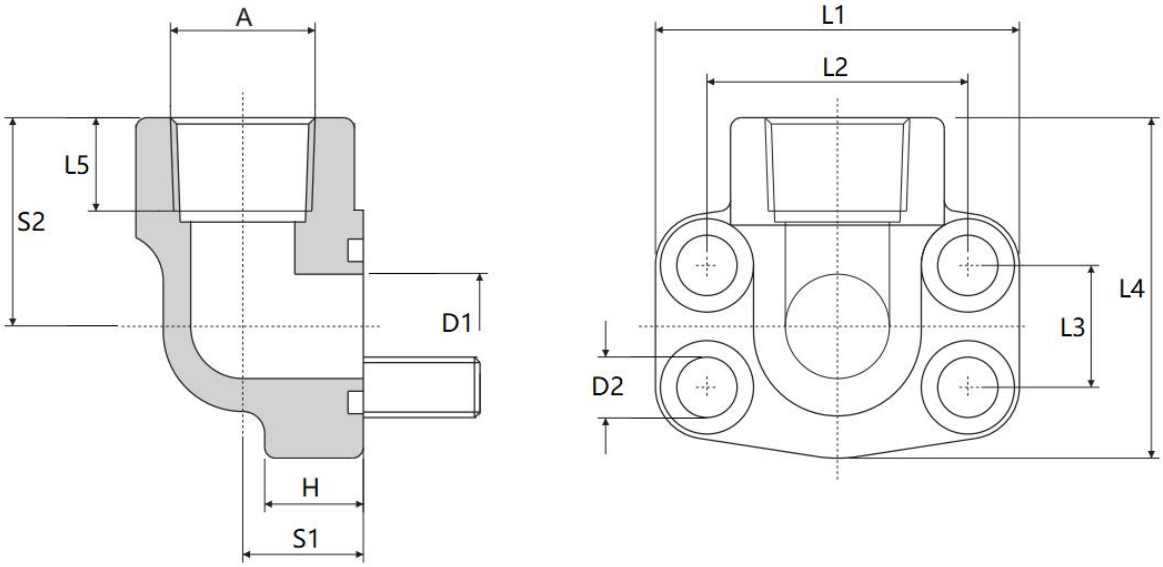

3000PSI

Type	Size	Dimensions(mm)											Accessories		Weight	Pressure
	Inch	A	D1	D2	L1	L2	L3	L4	L5	H	S1	S2	Bolt	O-Ring	Kg	Bar
AFW301N	1/2	NPT1/2	13	9	38.1	54	17.5	60	19	16	20	37	M8×30	18.66×3.53	0.4	345
AFW302N	3/4	NPT3/4	19	11	47.63	65	22.26	63	19	18	24	38	M10×35	25.00×3.53	0.6	345
AFW303N	1	NPT1	25	11	52.37	70	26.16	70	20	19	28	43	M10×35	32.92×3.53	0.8	345
AFW304N	1 1/4	NPT1 1/4	32	11	58.72	79	30.18	85	22	21	34	51	M10×40	37.70×3.53	1.2	276
AFW305N	1 1/2	NPT1 1/2	38	13.5	69.85	93	35.72	95	25	25	38	56	M12×45	47.22×3.53	1.65	207
AFW306N	2	NPT2	51	13.5	77.77	102	42.88	110	28	25	42	65	M12×45	56.75×3.53	2	207

6000PSI

Type	Size	Dimensions(mm)											Accessories		Weight	Pressure
	Inch	A	D1	D2	L1	L2	L3	L4	L5	H	S1	S2	Bolt	O-Ring	Kg	Bar
AFW601N	1/2	NPT1/2	13	9	40.49	54	18.24	60	19	16	20	37	M8×30	18.66×3.53	0.5	414
AFW602N	3/4	NPT3/4	19	11	50.8	70	23.8	70	19	19	28	43	M10×35	25.00×3.53	1.25	414
AFW603N	1	NPT1	25	13	57.17	79	27.78	85	20	21	34	51	M12×40	32.92×3.53	1.5	414
AFW604N	1 1/4	NPT1 1/4	32	15	66.68	93	31.76	95	22	25	38	56	M14×45	37.70×3.53	1.8	414
AFW605N	1 1/2	NPT1 1/2	38	17	79.38	110	36.52	100	25	25	42	65	M16×45	47.22×3.53	2.8	414
AFW606N	2	NPT2	51	21	96.82	134	44.46	150	28	29	60	92	M20×55	56.75×3.53	4	414

Butt Weld Flange

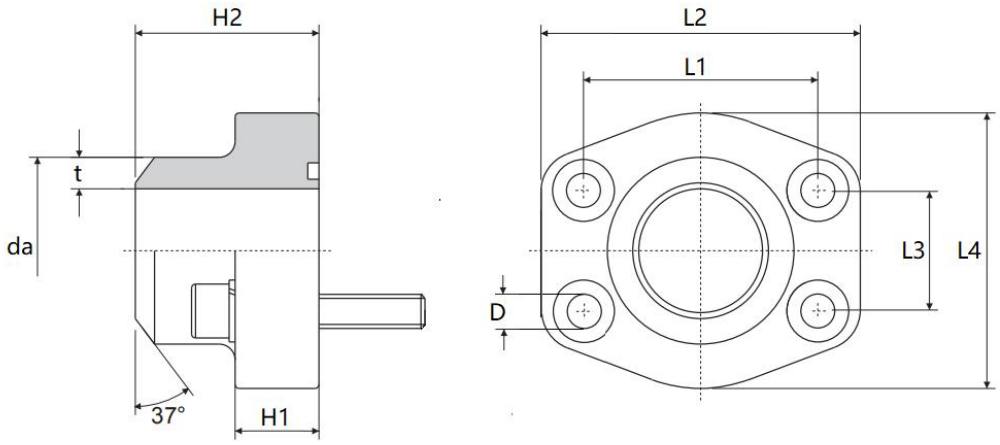

3000PSI

Type	Size	Dimensions(mm)								Accessories		Weight	Pressure
	Inch	da×t	L1	L2	L3	L4	H1	H2	D	Bolt	O-Ring	Kg	Bar
AFS301T	1/2	16×2.5 20×3 21.6×4.3	38.1	54	17.5	46	16	36	9	M8×30	18.66×3.53	0.28	345
AFS302T	3/4	25×3 26.9×3.6 28×4.5	47.63	65	22.26	50	18	36	11	M10×35	25.00×3.53	0.39	345
AFS303T	1	30×4 33.7×3.6 34×4.5/3 5×4	52.37	70	26.16	55	18	38	11	M10×35	32.92×3.53	0.46	345
AFS304T	1 1/4	38×4 42.4×3.6 42.8×5.5	58.72	79	30.18	68	21	41	11.5	M10×40	37.70×3.53	0.66	276
AFS305T	1 1/2	42.2×4 48.3×4 48.6×5.5	69.85	93	35.72	78	25	45	13.5	M12×45	47.22×3.53	1.05	207
AFS306T	2	60.3×4 61×5.5	77.77	102	42.88	90	25	45	13.5	M12×45	56.75×3.53	1.09	207
AFS307T	2 1/2	76.1×4 77×7.1	88.9	114	50.8	105	25	50	13.5	M12×45	69.45×3.53	1.4	172
AFS308T	3	76.1×4 76.1×7.1 89×4 92×9	106.4	135	61.92	124	27	50	17	M16×50	85.32×3.53	2.15	138
AFS309T	3 1/2	89×4 103×7	120.7	152	69.85	136	27	48	17	M16×50	98.02×3.53	2.4	34
AFS310T	4	114.3×4 115.5×8	130.2	162	77.76	146	27	48	17	M16×50	110.72×3.53	2.85	34

6000PSI

Type	Size	Dimensions(mm)								Accessories		Weight	Pressure
	Inch	da×t	L1	L2	L3	L4	H1	H2	D	Bolt	O-Ring	Kg	Bar
AFS601T	1/2	16×2.5 20×3 21.6*4.3	40.49	54	18.24	46	16	36	9	M8×30	18.66×3.53	0.35	414
AFS602T	3/4	20×3 25×4 26.9×3.6 28×4.5	50.8	71	23.82	55	21	36	11	M10×35	25.00×3.53	0.65	414
AFS603T	1	25×4 30×5 33.7×7.1 34×4.5	57.17	81	27.78	65	25	42	13	M12×45	32.92×3.53	1.05	414
AFS604T	1 1/4	30×5 38×6 42.4×8.8 42.8×5.5	66.68	95	31.76	78	27	45	15	M14×50	37.70×3.53	1.53	414
AFS605T	1 1/2	48.3×8.8 48.6×5.5 30.3×10	79.38	112	36.52	94	30	50	17	M16×55	47.22×3.53	2.5	350
AFS606T	2	30.3×10 61×9 61×5.5 76.1×12.5	96.82	134	44.46	114	37	65	21	M20×70	56.75×.53	4.2	350

Butt Weld Counter Flange

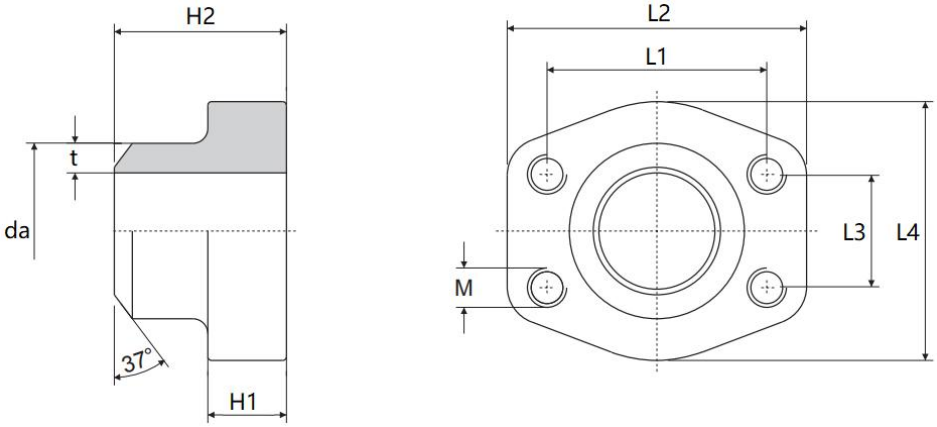

3000PSI

Type	Size	Dimensions(mm)								Weight	Pressure
	Inch	da×t	L1	L2	L3	L4	H1	H2	M	Kg	Bar
GFS301T	1/2	16×2.5 20×3 21.6×4.3	38.1	54	17.5	46	16	36	M8	0.28	345
GFS302T	3/4	25×3 26.9×3.6 28×4.5	47.63	65	22.26	50	18	36	M10	0.39	345
GFS303T	1	30×4 33.7×3.6 34×4.5 35×4	52.37	70	26.16	55	18	38	M10	0.46	345
GFS304T	1 1/4	38×4 42.4×3.6 42.8×5.5	58.72	79	30.18	68	21	41	M10	0.66	276
GFS305T	1 1/2	42.2×4 48.3×4 48.6×5.5	69.85	93	35.72	78	25	45	M12	1.05	207
GFS306T	2	60.3×4 61×5.5	77.77	102	42.88	90	25	45	M12	1.09	207
GFS307T	2 1/2	76.1×5.5 77×7.1	88.9	114	50.8	105	25	50	M12	1.4	172
GFS308T	3	76.1×4 76.1×7.1 89×4 92×9	106.4	135	61.92	124	27	50	M16	2.15	138
GFS309T	3 1/2	89×4 103×7	120.7	152	69.85	136	27	48	M16	2.4	34
GFS310T	4	114.3×4 115.5×8	130.2	162	77.76	146	27	48	M16	2.85	34

6000PSI

Type	Size	Dimensions(mm)								Weight	Pressure
	Inch	da×t	L1	L2	L3	L4	H1	H2	M	Kg	Bar
GFS601T	1/2	16×2.5 20×3 21.6×4.3	40.49	54	18.24	46	16	36	M8	0.35	414
GFS602T	3/4	20×3 25×4 26.9×3.6 28×4.5	50.8	71	23.82	55	21	36	M10	0.65	414
GFS603T	1	25×4 30×5 33.7×7.1 34×4.5	57.17	81	27.78	65	25	42	M12	1.05	414
GFS604T	1 1/4	30×5 38×6 42.4×8.8 42.8×5.5	66.68	95	31.76	78	27	45	M14	1.53	414
GFS605T	1 1/2	48.3×8.8 48.6×5.5 60.3×10	79.38	112	36.52	94	30	50	M16	2.5	350
GFS606T	2	60.3×10 61×9 61×5.5 76.1×12.5	96.82	134	44.46	114	37	65	M20	4.2	350

90° Butt Weld Flange

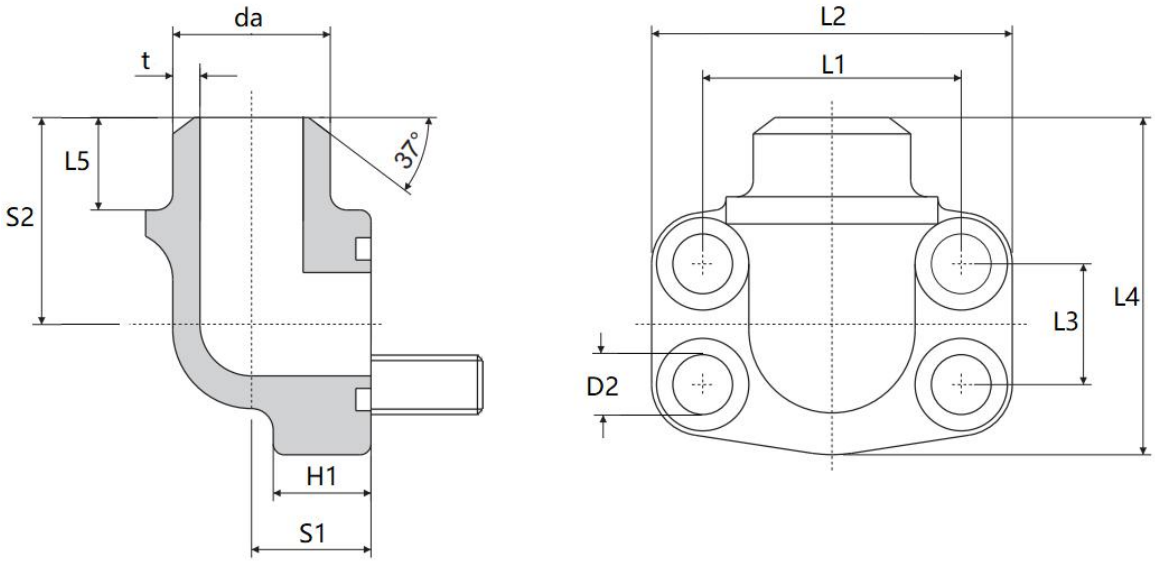

3000PSI

Type	Size	Dimensions(mm)											Accessories		Weight	Pressure
	Inch	da×t	D1	D2	L1	L2	L3	L4	L5	H	S1	S2	Bolt	O-Ring	Kg	Bar
AFW301T	1/2	20×3 22×4	13	9	38.1	54	17.5	60	10	16	20	37	M8×30	18.66× 3.53	0.4	345
AFW302T	3/4	25×3 28×4	19	11	47.63	65	22.26	63	10	18	24	38	M10×35	25.00× 3.53	0.6	345
AFW303T	1	30×4 35×4	25	11	52.37	70	26.16	70	12	19	28	43	M10×35	32.92× 3.53	0.8	345
AFW304T	1 1/4	38×4 42.4×4	32	11	58.72	79	30.18	85	14	21	34	51	M10×40	37.70× 3.53	1.2	276
AFW305T	1 1/2	42.4×4 48.3×4.5	38	13.5	69.85	93	35.72	95	16	25	38	56	M12×45	47.22× 3.53	1.65	207
AFW306T	2	60.3×5.6	51	13.5	77.77	102	42.88	110	18	25	42	65	M12×45	56.75× 3.53	2	207

6000PSI

Type	Size	Dimensions(mm)											Accessories		Weight	Pressure
	Inch	da*t	D1	D2	L1	L2	L3	L4	L5	H	S1	S2	Bolt	O-Ring	Kg	Bar
AFW601T	1/2	20×3 22×4	13	9	40.49	54	18.24	60	10	16	20	37	M8×30	18.66× 3.53	0.5	414
AFW602T	3/4	25×4 28×4.5	19	11	50.8	70	23.8	70	12	19	28	46	M10×35	25.00× 3.53	1.25	414
AFW603T	1	30×4 35×5	25	13	57.17	79	27.78	85	14	21	34	51	M12×40	32.92× 3.53	1.5	414
AFW604T	1 1/4	38×5 42.4×6	32	15	66.68	93	31.76	95	16	25	38	56	M14×45	37.70× 3.53	1.8	414
AFW605T	1 1/2	48.3×8	38	17	79.38	110	36.52	100	18	25	42	65	M16×45	47.22× 3.53	2.8	414
AFW606T	2	60.3×10	51	21	96.82	134	44.46	150	18	29	60	92	M20×55	56.75× 3.53	4	414

Butt Weld Flange Coupling

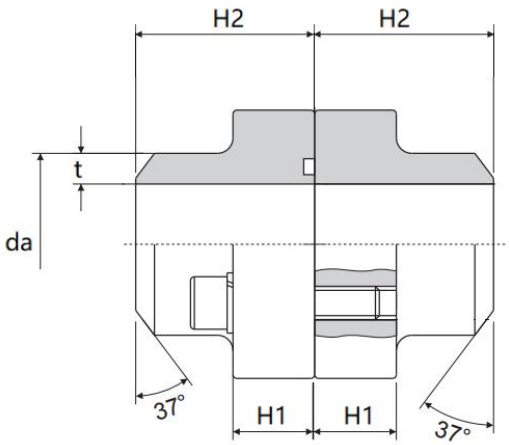

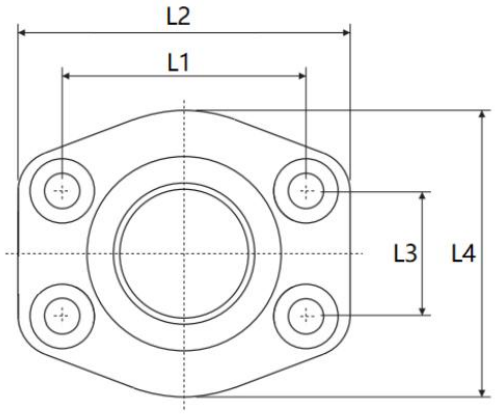

3000PSI

Type	Size	Dimensions(mm)							Accessories		Weight	Pressure
	Inch	da×t	L1	L2	L3	L4	H1	H2	Bolt	O-Ring	Kg	Bar
AFS301T	1/2	16×2.5 20×3 21.6×4.3	38.1	54	17.5	46	16	36	M8×30	18.66×3.53	0.56	345
AFS302T	3/4	25×3 26.9×3.6 28×4.5	47.63	65	22.26	50	18	36	M10×35	25.00×3.53	0.78	345
AFS303T	1	30×4, 33.7×3.6 34×4.5 35×4	52.37	70	26.16	55	18	38	M10×35	32.92×3.53	0.92	345
AFS304T	1 1/4	38×4 42.4×3.6 42.8×5.5	58.72	79	30.18	68	21	41	M10×40	37.70×3.53	1.32	276
AFS305T	1 1/2	42.2×4 48.3×4 48.6×5.5	69.85	93	35.72	78	25	45	M12×45	47.22×3.53	2.1	207
AFS306T	2	60.3×4 61×5.5	77.77	102	42.88	90	25	45	M12×45	56.75×3.53	2.4	
AFS307T	2 1/2	76.1×4 77×7.1	88.9	114	50.8	105	25	50	M12×45	69.45×3.53	2.8	172
AFS308T	3	76.1×4 76.1×7.1 89×4 92×9	106.4	135	61.92	124	27	50	M16×50	85.32×3.53	4.3	138
AFS309T	3 1/2	89×4 103×7	120.7	152	69.85	136	27	48	M16×50	98.02×3.53	4.8	34
AFS310T	4	114.3×4 115.5×8	130.2	162	77.76	146	27	48	M16×50	110.72×3.53	5.8	34

6000PSI

Type	Size	Dimensions(mm)							Accessories		Weight	Pressure
	Inch	da×t	L1	L2	L3	L4	H1	H2	Bolt	O-Ring	Kg	Bar
AFS601T	1/2	16×2.5 20×3 21.6*4.3	40.49	54	18.24	46	16	36	M8×30	18.66×3.53	0.7	414
AFS602T	3/4	20×3 25×4 26.9×3.6 28×4.5	50.8	71	23.82	55	21	36	M10×35	25.00×3.53	1.3	414
AFS603T	1	25×4 30×5 33.7×7.1 34×4.5	57.17	81	27.78	65	25	42	M12×45	32.92×3.53	2.1	414
AFS604T	1 1/4	30×5 38×6 42.4×8.8 42.8×5.5	66.68	95	31.76	78	27	45	M14×50	37.70×3.53	3.1	414
AFS605T	1 1/2	48.3×8.8 48.6×5.5 30.3×10	79.38	112	36.52	94	30	50	M16×55	47.22×3.53	5	350
AFS606T	2	30.3×10 61×9 61×5.5 76.1×12.5	96.82	134	44.46	114	37	65	M20×70	56.75×.53	8.4	350

Flared Flange

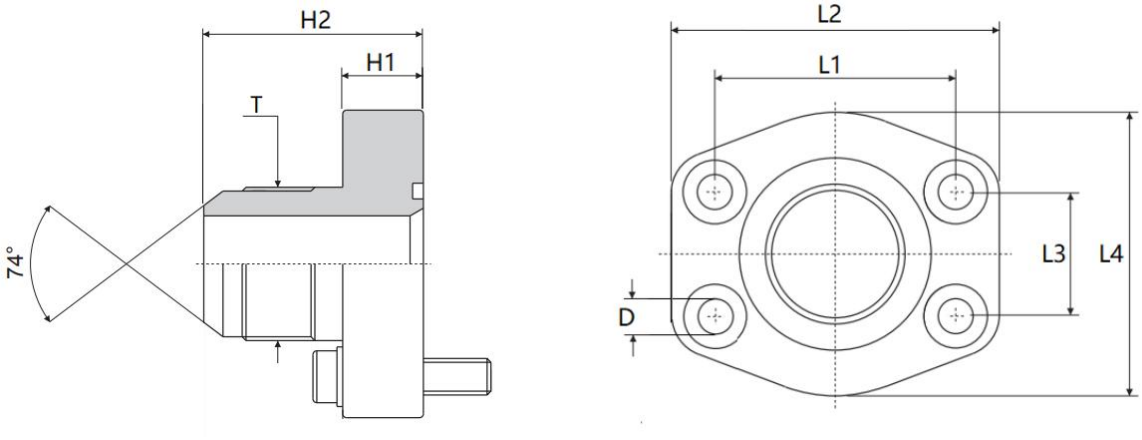

3000PSI

Type	Size	Dimensions(mm)								Accessories		Weight	Pressure
	Inch	T	L1	L2	L3	L4	H1	H2	D	Bolt	O-Ring	Kg	Bar
JFS301	1/2	3/4-16	38.1	54	17.5	46	16	36	9	M8×30	18.66×3.53	0.28	345
JFS302	3/4	1 1/16-12	47.63	65	22.26	50	18	36	11	M10×35	25.00×3.53	0.39	345
JFS303	1	1 5/16-12	52.37	70	26.16	55	18	38	11	M10×35	32.92×3.53	0.46	345
JFS304	1 1/4	1 5/8-12	58.72	79	30.18	68	21	41	11.5	M10×40	37.70×3.53	0.66	276
JFS305	1 1/2	1 7/8-12	69.85	93	35.72	78	25	45	13.5	M12×45	47.22×3.53	1.05	207
JFS306	2	2 1/2-12	77.77	102	42.88	90	25	45	13.5	M12×45	56.75×3.53	1.09	207

6000PSI

Type	Size	Dimensions(mm)								Accessories		Weig	Pressure
	Inch	T	L1	L2	L3	L4	H1	H2	D	Bolt	O-Ring	ht Kg	Bar
JFS601	1/2	3/4-16	40.49	54	18.24	46	16	36	9	M8×30	18.66×3.53	0.35	414
JFS602	3/4	1 1/16-12	50.8	71	23.82	55	21	36	11	M10×35	25.00×3.53	0.65	414
JFS603	1	1 5/16-12	57.17	81	27.78	65	25	42	13	M12×45	32.92×3.53	1.05	414
JFS604	1 1/4	1 5/8-12	66.68	95	31.76	78	27	45	15	M14×50	37.70×3.53	1.53	414
JFS605	1 1/2	1 7/8-12	79.38	112	36.52	94	30	50	17	M16×55	47.22×3.53	2.5	350
JFS606	2	2 1/2-12	96.82	134	44.46	114	37	65	21	M20×70	56.75×.53	4.2	350

Closed Flange

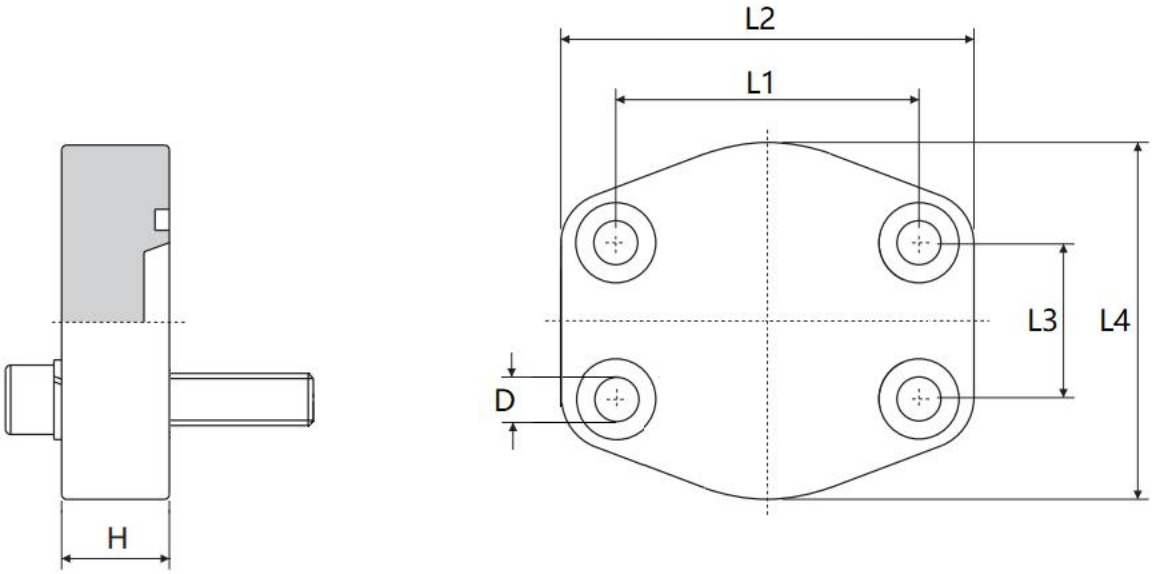

3000PSI

Type	Size	Dimensions(mm)						Accessories		Weight	Pressure
	Inch	L1	L2	L3	L4	H	D	Bolt	O-Ring	Kg	Bar
AFC301	1/2	38.1	54	17.5	46	16	9	M8×30	18.66×3.53	0.2	345
AFC302	3/4	47.63	65	22.3	50	16	11	M10×35	25.00×3.53	0.3	345
AFC303	1	52.37	70	26.2	55	19	11	M10×35	32.92×3.53	0.37	345
AFC304	1 1/4	58.72	79	30.2	68	19	11.5	M10×40	37.70×3.53	0.54	276
AFC305	1 1/2	69.85	93	35.7	78	20	13.5	M12×45	47.22×3.53	0.9	207
AFC306	2	77.77	102	42.9	90	20	13.5	M12×45	56.75×3.53	1	207
AFC307	2 1/2	88.9	114	50.8	105	20	13.5	M12×45	69.45×3.53	1.35	172
AFC308	3	106.38	134	61.9	124	24	17	M16×50	85.32×3.53	2.35	138

6000PSI

Type	Size	Dimensions(mm)						Accessories		Weight	Pressure
	Inch	L1	L2	L3	L4	H	D	Bolt	O-Ring	Kg	Bar
AFC601	1/2	40.49	54	18.2	46	16	9	M8×30	18.66×3.53	0.2	414
AFC602	3/4	50.8	71	23.8	55	19	11	M10×35	25.00×3.53	0.48	414
AFC603	1	57.15	81	27.8	65	24	13	M12×45	32.92×3.53	0.77	414
AFC604	1 1/4	66.68	95	31.8	78	27	15	M14×45	37.70×3.53	0.85	414
AFC605	1 1/2	79.38	112	36.5	94	30	17	M16×45	47.22×3.53	1.8	414
AFC606	2	96.82	134	44.5	114	28	21	M20×65	56.75×3.53	2	414

Closed Counter Flange

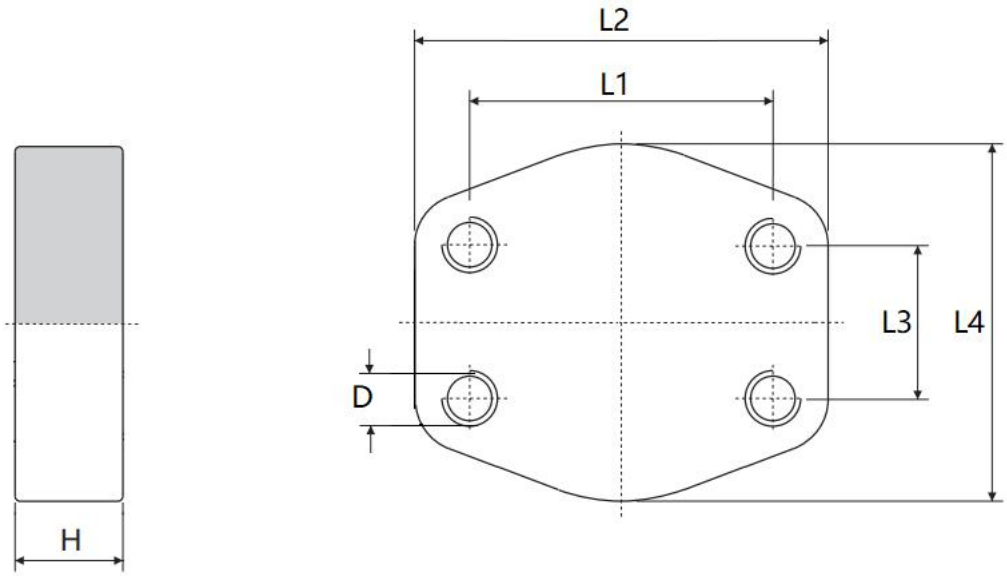

3000PSI

Type	Size	Dimensions(mm)						Weight	Pressure
	Inch	L1	L2	L3	L4	H	M	Kg	Bar
GFC301	1/2	38.1	54	17.5	46	16	M8	0.2	345
GFC302	3/4	47.63	65	22.3	50	16	M10	0.3	345
GFC303	1	52.37	70	26.2	55	19	M10	0.37	345
GFC304	1 1/4	58.72	79	30.2	68	19	M10	0.54	276
GFC305	1 1/2	69.85	93	35.7	78	20	M12	0.9	207
GFC306	2	77.77	102	42.9	90	20	M12	1	207
GFC307	2 1/2	88.9	114	50.8	105	20	M12	1.35	172
GFC308	3	106.38	134	61.9	124	24	M16	2.35	138

6000PSI

Type	Size	Dimensions(mm)						Weight	Pressure
	Inch	L1	L2	L3	L4	H	M	Kg	Bar
GFC601	1/2	40.49	54	18.2	46	16	M8	0.2	414
GFC602	3/4	50.8	71	23.8	55	19	M10	0.48	414
GFC603	1	57.15	81	27.8	65	24	M12	0.77	414
GFC604	1 1/4	66.68	95	31.8	78	27	M14	0.85	414
GFC605	1 1/2	79.38	112	36.5	94	30	M16	1.8	414
GFC606	2	96.82	134	44.5	114	28	M20	2	414

SAE Flange Weld Coupling

ASF

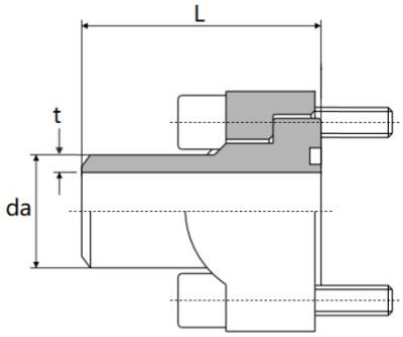

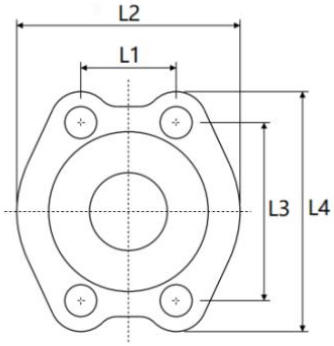

BSF

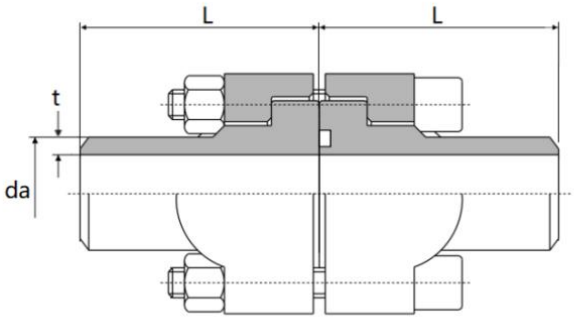

3000PSI

Type	Size	Dimensions(mm)							accessories		Weight	Pressure
	Inch	da×t	L1	L2	L3	L4	L	D	Bolt	O-Ring	Kg	Bar
ASF301 BSF301	1/2	16×3, 20×3, 22×3, 22×4.5	17.5	46	38	54	30	8.5	M8×25 M8×40	18.66×3.53	0.26 0.52	345
ASF302 BSF302	3/4	20×3, 22×3, 25×3, 28×4.5, 26.9×3.6, 30×5	22.3	51.8	48	65	35	10.5	M10×30 M10×45	25×3.53	0.44 0.85	345
ASF303 BSF303	1	25×3, 28×3, 30×4, 33.7×7.1, 35×5 38×5	26.2	58.4	52	70	40	10.5	M10×30 M10×50	32.92×3.53	0.56 1.1	345
ASF304 BSF304	1 1/4	30×4, 34×5, 38×4, 38×6, 42.4×4, 43×6	30.2	72.6	59	79	45	10.5	M10×30 M10×50	37.70×3.53	0.72 1.40	276
ASF305 BSF305	1 1/2	38×4, 42.4×4, 48.3×3.6, 48.3×5, 50×6	35.7	82.2	70	94	50	13.3	M12×35 M12×55	47.22×3.53	0.92 1.8	207
ASF306 BSF306	2	42.4×4, 48.3×6, 50×6, 57×3.5, 60.3×4, 60.3×5.6, 60.3×8, 62×7.5	42.9	96.4	78	102	60	13.3	M12×35 M12×55	56.75×3.53	1.3 2.5	207
ASF307 BSF307	2 1/2	76.1×4, 76.1×5.5, 76.1×7.1	50.8	108	89	114	70	13.3	M12×40 M12×55	69.45×3.53	1.8 3.5	172
ASF308 BSF308	3	76.1×4, 76.1×7.1, 89×4, 89×8, 90×10	61.9	131	106	135	70	17	M16×45 M16×70	85.32×3.53	2.6 5.1	138
ASF309 BSF309	3 1/2	76.1×4, 89×4, 101.6×7.1	69.8	139	121	152	80	17	M16×45 M16×70	98.02×3.53	3 5.8	34
ASF310 BSF310	4	89×5, 114.3×6, 114.3×8	77.8	152	130	162	80	17	M16×50 M16×75	110.72×3.5 3	3.5 6.7	34
ASF311 BSF311	5	133×4, 140×4, 140×10	92.1	180	152	184	80	17	M16×50 M16×80	136.12×3.5 3	4.5 8.6	34

SAE Flange Weld Coupling

ASF

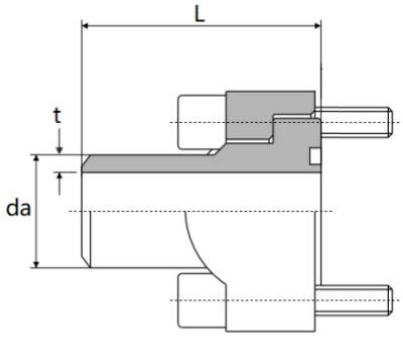

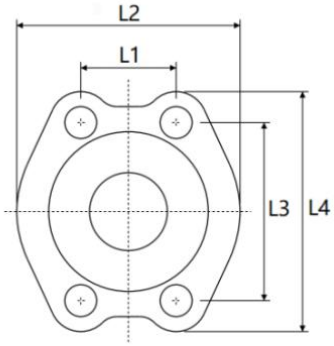

BSF

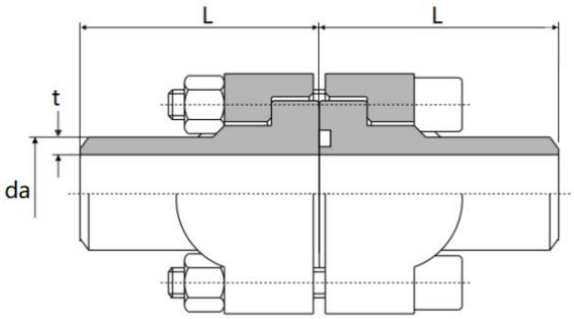

6000PSI

Type	Size	Dimensions(mm)							accessories		Weight	Pressure
	Inch	da×t	L1	L2	L3	L4	L	D	Bolt	O-Ring	Kg	Bar
ASF601 BSF601	1/2	16×3, 18×4, 20×3, 22×4.5	18.2	47.2	40	56	40	8.5	M8×30 M8×45	18.66×3.53	0.35 0.67	414
ASF602 BSF602	3/4	20×3, 22×4, 25×4, 26.9×5.6, 28×5, 35×6.5	23.8	60	51	71	45	10.5	M10×35 M10×55	25×3.53	0.68 1.30	414
ASF603 BSF603	1	25×4, 30×5, 33.7×7.1, 35×5, 38×5	27.8	69.6	57	81	50	12.6	M12×45 M12×65	32.92×3.53	1.06 2.00	414
ASF604 BSF604	1 1/4	30×5, 38×6, 42.4×6, 42.4×8, 44×7.5	31.8	77.2	67	95	55	14.6	M14×50 M14×75	37.70×3.53	1.58 3.0	414
ASF605 BSF605	1 1/2	38×6, 48.3×6, 48.3×8, 48.3×8.8, 50×6, 51×8	36.5	95	79	113	60	17	M16×55 M16×85	47.22×3.53	2.50 4.80	414
ASF606 BSF606	2	48.3×6, 57×6, 60.3×6.3, 60.3×8, 60.3×10, 61×9, 63×10, 65×11	44.5	114	97	133	70	21	M20×70 M20×100	56.75×3.53	4.30 8.20	414
ASF607 BSF607	2 1/2	76.1×12.5, 89×11, 89×14.2	58.8	150	124	180	80	25	M24×80 M24×130	75×5.33	8.50 16.5	414
ASF608 BSF608	3	89×14.2, 114.3×14.2, 108×12.5, 114.3×20, 114.3×17.5	71.6	198	152	215	10 0	31.5	M30×90 M30×150	88.60×5.7 98.60×5.7	16.80 32.80	414

SAE 90° Flange Welding Couplings

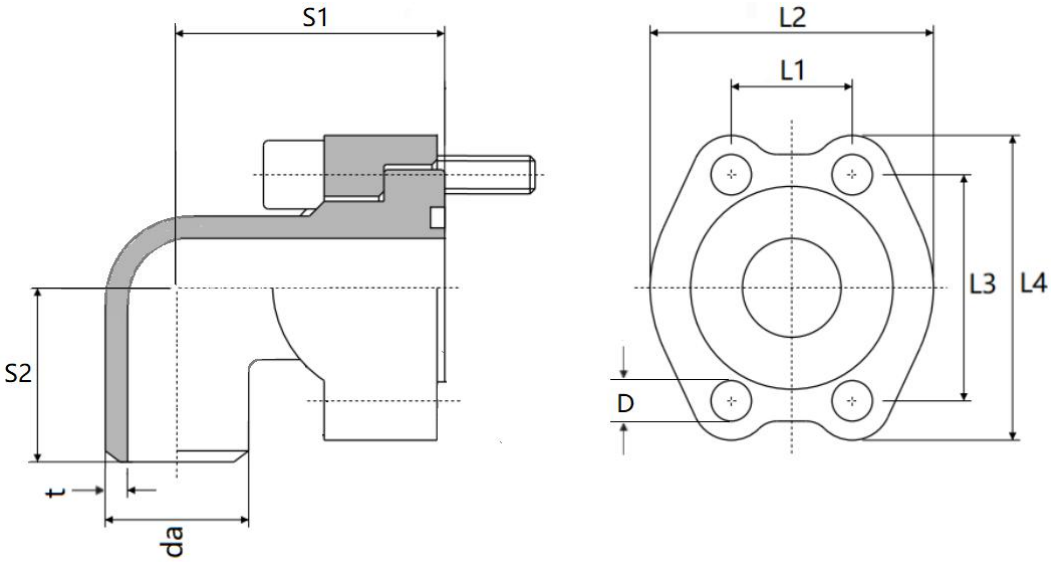

3000PSI

Type	Size	Dimensions(mm)								accessories		Weight	Pressure
	Inch	da×t	L1	L2	L3	L4	S1	S2	D	Bolt	O-Ring	Kg	Bar
AWF301	1/2	20×25 21.3×2.9 22×3	17.5	46	38	54	36	40	8.5	M8×25	18.66×3.53	0.4	345
AWF302	3/4	22×3 25×3 26.9×3.6	22.3	51.8	48	65	43	46	10.5	M10×30	25×3.53	0.6	345
AWF303	1	30×4 33.7×3.6 35×4	26.2	58.4	52	70	48	54	10.5	M10×30	32.92×3.52	0.8	345
AWF304	1 1/4	38×3 42.4×4	30.2	72.6	59	79	53	65	10.5	M10×35	37.70×3.53	1.2	250
AWF305	1 1/2	42.4×4 48.3×5	35.7	82.2	70	94	58	68	13.5	M12×35	47.22×3.53	1.6	200

6000PSI

Type	Size	Dimensions(mm)								accessories		Weight	Pressure
	Inch	da×t	L1	L2	L3	L4	S1	S2	D	Bolt	O-Ring	Kg	Bar
AWF601	1/2	16×3 20×3 22×3	18.2	47.2	40	56	39	40	8.5	M8×30	18.66×3.53	0.47	400
AWF602	3/4	25×4 26.9×5.6 28×5	23.8	60	51	71	48	50	10.5	M10×35	25×3.53	0.90	400
AWF603	1	30×5 33.7×7.1 35×5	27.8	69.6	57	81	60	60	12.6	M12×45	32.92×3.53	1.5	315
AWF604	1 1/4	38×6 42.4×6	31.8	77.2	67	95	68	66	14.6	M14×50	37.70×3.53	2.2	315
AWF605	1 1/2	38.6×6 48.3×8	36.5	95	79	113	76	75	17	M16×55	47.22×3.53	3.3	315

SAE Flange Adapter

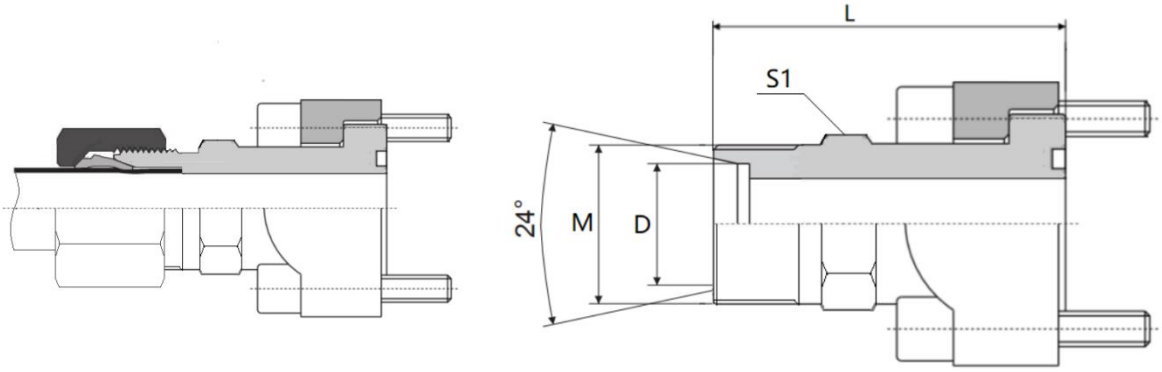

3000PSI

Flange Type	Inch	Jiont No.	Tube D	thread M	L1	S1	S2	Pressure (Bar)
FH301	1/2	GSF301-15L	15L	M22×1.5	48	24	27	315
		GSF301-16S	16S	M24×1.5	50		30	350
FH302	3/4	GSF302-18L	18L	M26×1.5	54	30	32	315
		GSF302-22L	22L	M30×2	54		36	160
		GSF302-20S	20S	M30×2	58		36	350
		GSF302-25S	25S	M36×2	58		46	350
FH303	1	GSF303-28L	28L	M36×2	55	36	41	160
		GSF303-25L	25S	M36×2	59		46	350
		GSF303-30L	30S	M42×2	64		50	350
FH304	1 1/4	GSF304-35L	35L	M45×2	59	41	50	160
		GSF304-25S	25S	M36×2	62		46	280
		GSF304-30S	30S	M42×2	62		50	280
		GSF304-38L	38S	M52×2	67		60	280
FH305	1 1/2	GSF305-42L	42L	M52×2	65	46	60	160
		GSF305-38S	38S		71			210

6000PSI

Flange Type	Inch	Jiont No.	Tube D1	thread M	L1	S2	S3	Pressure (Bar)
FH601	1/2	GSF601-16S	16S	M24×1.5	53.5	30	30	400
FH602	3/4	GSF602-16S	16S	M24×1.5	60	36	30	400
		GSF602-20S	20S	M30×2	61.5		36	
		GSF602-25S	25S	M36×2	63.5		46	
FH603	1	GSF603-25S	25S	M36×2	72	41	46	400
		GSF603-30S	30S	M42×2	74.5		50	
FH604	1 1/4	GSF604-30S	30S	M42×2	80	46	50	315
		GSF604-38S	38S	M52×2	83		60	
FH605	11/2	GSF605-38S	38S	M52×2	89.5	46	60	315

SAE Flange with 24° Cone End

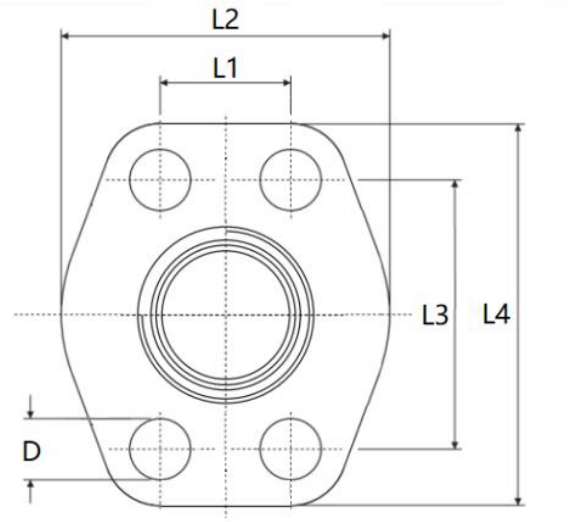

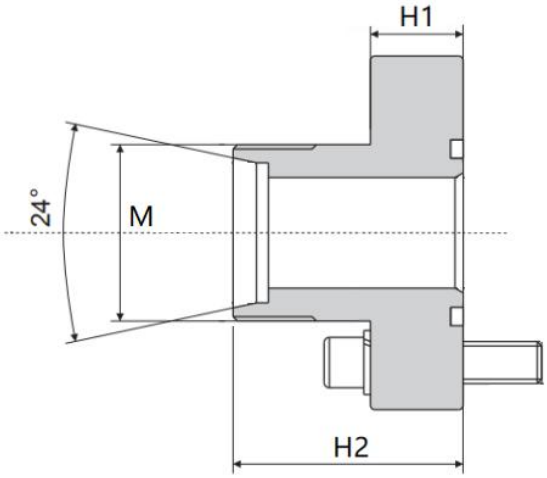

3000PSI

Type	Size Inch	Dimensions(mm)									Accessories		Weight Kg	Pressure Bar
		Tube	L1	L2	L3	L4	H1	H2	D	M	Bolt	O-Ring		
AFM301	1/2	15L	17.5	46	38	54	13	52	9	M22×1.5	M8×25	18.66×3.53	0.35	345
AFM302	3/4	22L	22.3	51.8	48	65	14	60	11	M30×2	M10×30	25×3.53	0.6	250
AFM303	1	28L	26.2	58.4	52	70	16	63	11	M36×2	M10×30	32.92×3.53	0.8	250
AFM304	1 1/4	35L	30.2	72.6	59	79	16	65	11.5	M45×2	M10×30	37.70×3.53	1	250
AFM305	1 1/2	42L	35.7	82.2	70	94	16	70	13.5	M52×2	M12×35	47.22×3.53	1.5	200

6000PSI

Type	Size Inch	Dimensions(mm)									Accessories		Weight Kg	Pressure Bar
		Tube	L1	L2	L3	L4	16	H2	D	M	Bolt	O-Ring		
AFM601	1/2	16S	18.2	18.2	40	54	19	60	9	M24×1.5	M8×30	18.66×3.53	1.40.	400
AFM602	3/4	20S	23.8	23.8	51	73	24	73	11	M30×2	M10×35	25×3.53	0.8	400
AFM603	1	25S	27.8	27.8	57	79	27	82	13	M36×2	M12×45	32.92×3.53	1	400
AFM604	1 1/4	30S	31.8	31.8	67	93	27	92	15	M42×2	M14×50	37.70×3.53	1.6	400
AFM605	1 1/2	38S	36.5	36.5	79	112	30	96	17	M52×2	M16×55	47.22×3.53	2	315

SAE Flange 90° with 24° Cone End

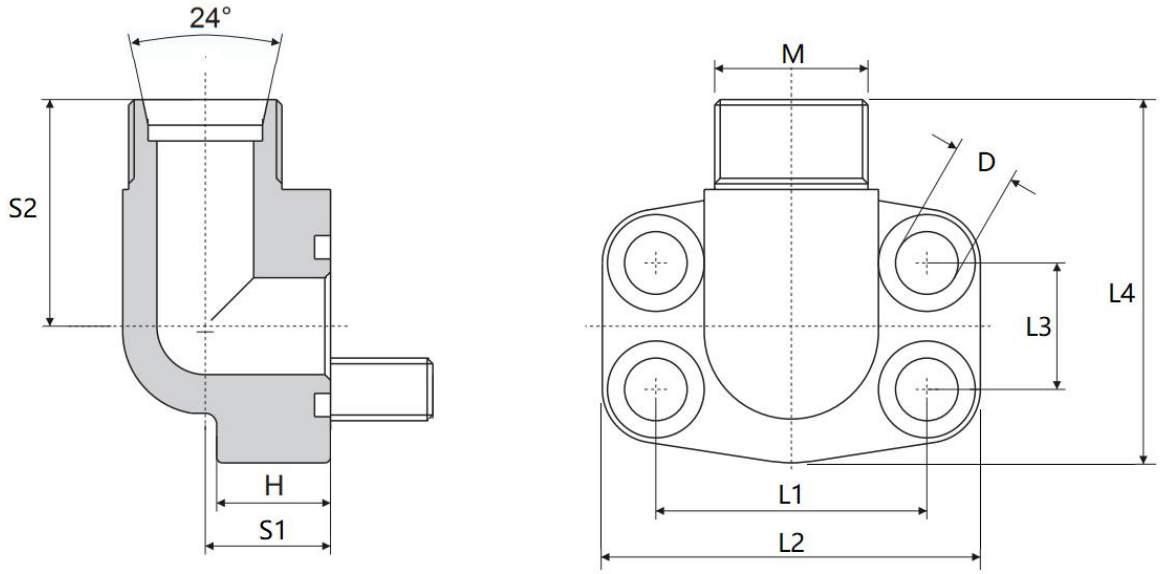

3000PSI

Type	Size	Dimensions(mm)										Accessories		Weight	Pressure
	Inch	Tube	L1	L2	L3	L4	H	D	S1	S2	M	Bolt	O-Ring	Kg	Bar
AFMW301	1/2	15L	38.1	54	17.5	6	16	9	20	37	M22×1.5	M8×25	18.66×3.53	0.4	345
AFMW302	3/4	22L	47.63	65	22.26	63	18	11	24	38	M30×2	M10×30	25×3.53	0.6	250
AFMW303	1	28L	52.37	70	26.16	70	19	11	28	43	M36×2	M10×30	32.92×3.53	0.8	250
AFMW304	1 1/4	35L	58.72	79	30.18	85	21	11.5	34	52	M45×2	M10×40	37.70×3.53	1.2	250
AFMW305	1 1/2	42L	69.85	94	35.72	96	26	13.5	38	55	M52×2	M12×45	47.22×3.53	1.65	200

6000PSI

Type	Size	Dimensions(mm)									Accessories			Weight	Pressure
	Inch	Tube	L1	L2	L3	L4	H	D	S1	S2	M	Bolt	O-Ring	Kg	Bar
AFMW601	1/2	16S	40.49	54	18.24	60	16	9	20	37	M24×1.5	M8×30	18.66×3.53	1.4	400
AFMW602	3/4	20S	50.8	73	23.8	70	19	11	28	43	M30×2	M10×35	25×3.53	0.8	400
AFMW603	1	25S	57.17	79	27.78	85	21	13	34	51	M36×2	M12×45	32.92×3.53	1	400
AFMW604	1 1/4	30S	66.68	93	31.76	95	25	15	38	56	M42×2	M14×50	37.70×3.53	1.6	400
AFMW605	1 1/2	38S	79.38	112	36.52	110	25	17	42	65	M52×2	M16×55	47.22×3.53	2	315

SAE Tee Flanges

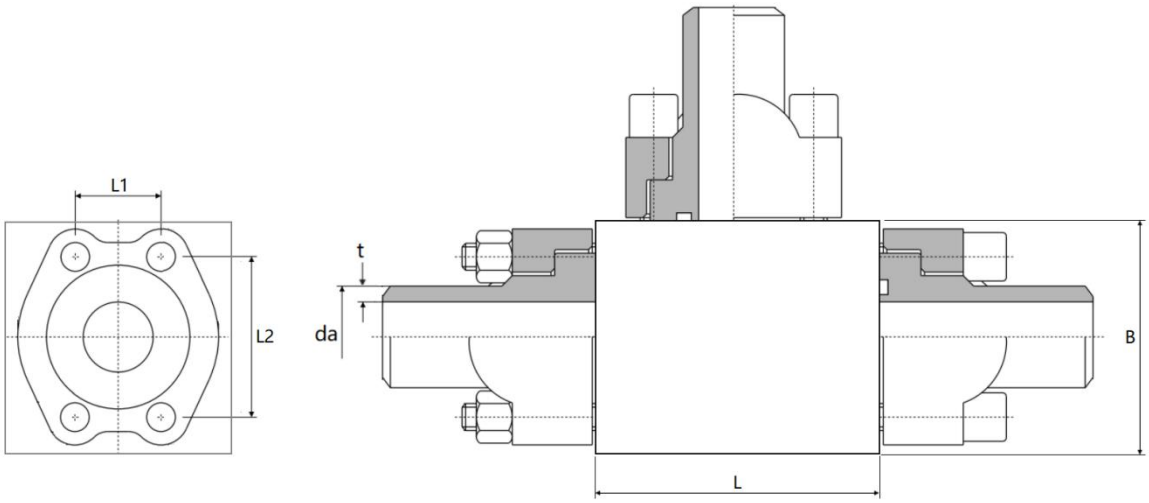

3000PSI

Type	Size	Dimensions(mm)					Weight	Pressure
	Inch	Da ×t	B	L1	L2	L	Kg	Bar
SFV301	1/2	301	60	17.5	38.10	70	1.8	345
SFV302	3/4	302	70	22.26	47.63	80	2.60	346
SFV303	1	303	80	26.16	52.37	90	3.80	347
SFV304	1 1/4	304	90	30.18	58.72	100	5.30	276
SFV305	1 1/2	305	1000	35.722	69.85	110	6.80	207
SFV306	2	306	110	42.886	77.77	120	8.3	207

6000PSI

Type	Size	Dimensions(mm)					Weight	Pressure
	Inch	da×t	B	L1	L2	L	Kg	Bar
SFV601	1/2	601	60	18.24	40.49	70	1.8	414
SFV602	3/4	602	80	23.8	0.80	90	3.20	414
SFV603	1	603	90	27.78	57.17	100	5.50	414
SFV604	1 1/4	604	100	31.76	66.68	110	7.20	414
SFV605	1 1/2	605	120	36.52	79.38	120	11.5	414
SFV606	2	606	140	44.46	96.82	140	17.3	414

Pump Flange Connection

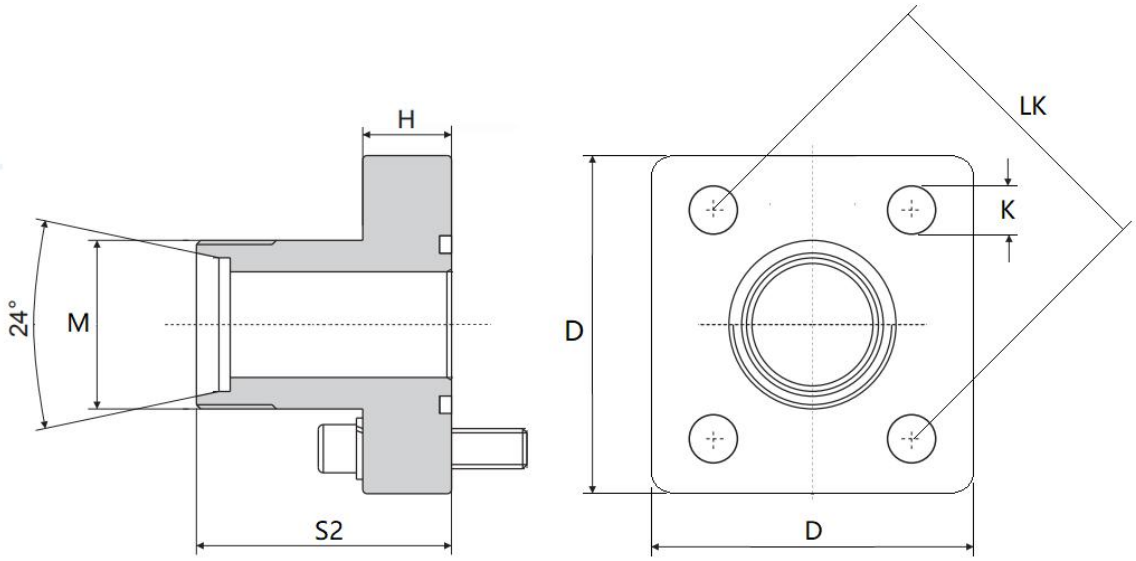

Joint no.	Tube specification	Dimensions(mm)						Accessories		Pressure Bar
		D	H	K	LK	S2	M	Bolt	O-Ring	
GF-35LK-10	L10	36	8	6.5	30	30	M16×1.5	4×M6×22	20×2.5	315
GF-35LK-12	L12	36	8	6.5	30	30	M18×1.5	4×M6×22	20×2.5	315
GF-35LK-10	L10	39	8	6.5	35	30	M16×1.5	4×M6×22	20×2.5	315
GF-35LK-12	L12	39	8	6.5	35	30	M18×1.5	4×M6×22	20×2.5	315
GF-40LK-15	L15	39	8	6.5	35	30	M22×1.5	4×M6×22	20×2.5	250
GF-40LK-18	L18	39	8	6.5	35	30	M26×1.5	4×M6×22	26×2.5	250
GF-40LK-15	L15	42	8	6.5	40	35	M22×1.5	4×M6×22	26×2.5	100
GF-40LK-18	L18	42	8	6.5	40	35	M26×1.5	4×M6×22	26×2.5	100
GF-40LK-22	L22	42	8	6.5	40	35	M30×2	4×M6×22	26×2.5	100
GF-35LK-28	L28	42	8	6.5	40	42	M36×2	4×M6×22	20×2.5	100
GF-35LK-16	S16	39	8	6.5	35	30	M24×1.5	4×M6×22	20×2.5	315
GF-40LK-20	S20	55	8	8.5	55	42	M30×2	4×M8×25	32×2.5	250

90° Pump Flange Connection

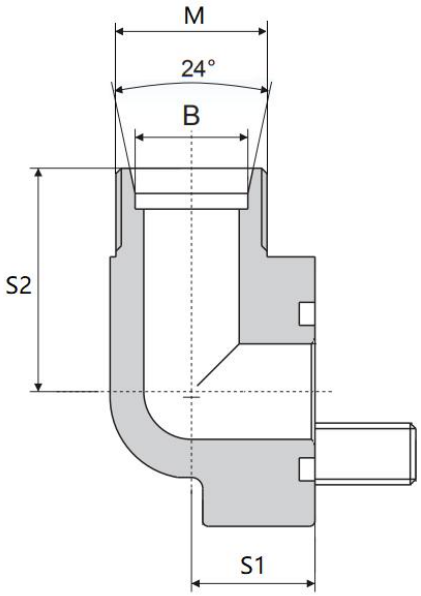

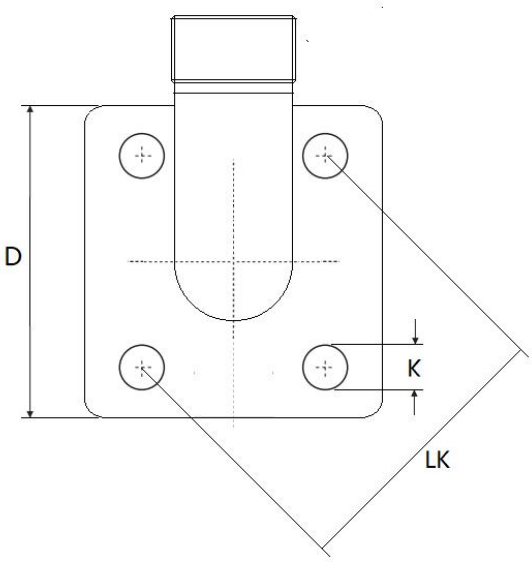

Joint no.	Tube specification	Dimensions(mm)						Accessories		Pressure Bar
		D	K	LK	S1	S2	M	Bolt	O-Ring	
WF-35LK-L10	L10	39	6.5	35	16.5	38	M16×1.5	M6×22 M6×35	20×2.5	315
WF-35LK-L12	L12	39	6.5	35	16.5	38	M18×1.5	M6×22 M6×35	20×2.5	315
WF-35LK-L15	L15	39	6.5	35	16.5	38	M22×1.5	M6×22 M6×35	20×2.5	315
WF-35LK-L18	L18	39	6.5	35	20.5	38	M26×1.5	M6×22 M6×35	20×2.5	315
WF-40LK-L15	L15	42	6.5	40	22.5	38	M22×1.5	M6×22 M6×35	26×2.5	250
WF-40LK-L18	L18	42	6.5	40	22.5	38	M26×1.5	M6×22	26×2.5	250
WF-40LK-L22	L22	42	6.5	40	22.5	38	M30×2	M6×22	26×2.5	100
WF-40LK-L28	L28	42	6.5	40	28	40	M36×2	M6×22 M6×50	26×2.5	100
WF-40LK-L35	L35	42	6.5	40	34	41	M45×2	M6×22 M6×60	26×2.5	100
WF-35LK-L16	L16	39	6.5	35	20	38	M24×1.5	M6×22 M6×40	20×2.5	100
WF-35LK-S20	S20	39	6.5	35	25	45	M30×2	M6×22 M6×45	20×2.5	315
WF-40LK-S20	S20	42	6.5	40	22.5	40	M30×2	M6×22 M6×45	26×2.5	250

Socket Weld Flange 500 PSI

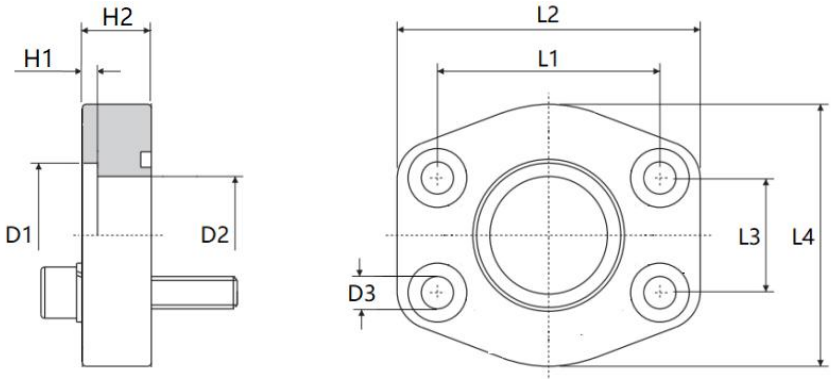

Type	Size	Dimensions(mm)										Accessories		Weight
	Inch	Tube	D1	D2	D3	L1	L2	L3	L4	H1	H2	Bolt	O-Ring	Kg
AFC301S	1/2	22×2	22.5	15	9	38.1	56	17.5	46	3	10	M8×25	18.66×3.53	0.12
AFC302S	3/4	28×2	28.5	20	11	47.6	65	22.3	50	4	12	M10×30	25.00×3.53	0.2
AFC303S	1	35×2	35.5	29	11	52.4	70	26.2	55	4	12	M10×30	32.92×3.53	0.25
AFC304S	1 1/4	42×2	42.5	34	11.5	58.7	79	30.2	68	4	12	M10×30	37.70×3.53	0.31
AFC305S	1 1/2	48.3×4	49	42	13.5	69.9	93	35.7	78	4	15	M12×35	47.22×3.53	0.5
AFC306S	2	60.3×4	61	53	13.5	77.8	102	42.9	90	4	15	M12×35	56.75×3.53	0.59
AFC307S	2 1/2	76.1×3.6	77	64	13.5	88.9	114	50.8	105	4	15	M12×35	69.45×3.53	0.72
AFC308S	3	88.9×4	90	80	17	106	134	61.9	124	5	20	M16×40	85.32×3.53	1.25
AFC309S	3 1/2	101.6×4.5	103	93	17	121	152	69.8	136	5	20	M16×40	98.02×3.53	1.5
AFC310S	4	114.3×4.5	115.5	105	17	130	162	77.8	146	6	25	M16×45	110.72×3.53	2.15
AFC311S	5	139.7×5	141	126	17	152	190	92.1	170	8	28	M16×45	136.12×3.53	3

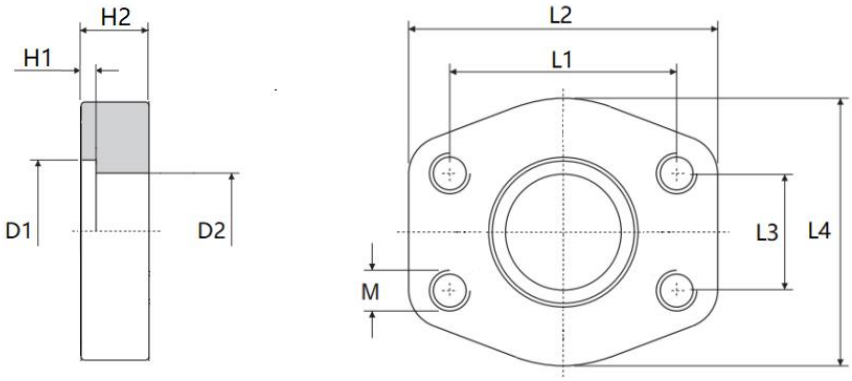

Type	Size	Dimensions(mm)										Weight
	Inch	Rohr	D1	D2	L1	L2	L3	L4	H1	H2	M	Kg
GFC301S	1/2	22×2	22.5	15	38.1	56	17.5	46	3	10	M8	0.12
GFC302S	3/4	28×2	28.5	20	47.63	65	22.26	50	4	12	M10	0.2
GFC303S	1	35×2	35.5	29	52.37	70	26.16	55	4	12	M10	0.25
GFC304S	1 1/4	42×2	42.5	34	58.72	79	30.18	68	4	12	M10	0.31
GFC305S	1 1/2	48.3×4	49	42	69.85	93	35.72	78	4	15	M12	0.5
GFC306S	2	60.3×4	61	53	77.77	102	42.88	90	4	15	M12	0.59
GFC307S	2 1/2	76.1×3.6	77	64	88.9	114	50.8	105	4	15	M12	0.72
GFC308S	3	88.9×4	90	80	106.38	134	61.92	124	5	20	M16	1.25
GFC309S	3 1/2	101.6×4.5	103	93	120.65	152	69.84	136	5	20	M16	1.5
GFC310S	4	114.3×4.5	115.5	105	130.18	162	77.76	146	6	25	M16	2.15
GFC311S	5	139.7×5	141	126	152.4	190	92.08	170	8	28	M16	3

ООО «АСТОМИ»
+7 495 128-71-68
mail@astomi.ru
www.astomi.ru